Pegler Yorkshire
CONNECT CONTROL

Pillar Pattern Sink Mixer. Dualflow tubular spout.

2523QT



Size	Pattern No.	Pack 1 Qty	Pack 2 Qty	Code	Barcode	Price (£) ex VAT
1/2"	2523QT	1	5	320027	5013866005145	£248.31

2523QT

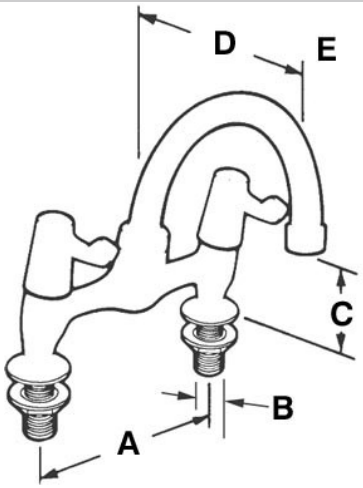

Code	Description	A	B	C	D	E
320027	2523QT NEW PATTERN SINK MIXER CP	178	1/2" BSP	130	198	65

Pegler Yorkshire reserve the right to change specifications

5 Year Guarantee

Luxury Taps and Mixers

Pegler Yorkshire Customcare 5 Year Guarantee - Terms and Conditions

Product are subject to a 5 year guarantee that is between Pegler Yorkshire and the final purchaser of the product.

The guarantee is subject to proof of purchase being supplied.

This guarantee does not affect any statutory rights the consumer may have in law.

The guarantee covers manufacturing or material defects and does not cover parts subject to normal wear and tear.

Finishes other than chrome are covered for a period of 3 years only and the guarantee on the finish is subject to the cleaning instructions being followed.

The guarantee is not applicable where the product is fitted contrary to the conditions in the fitting instructions.

Abusive behaviour and accidental damage to the product are not covered by this guarantee.

The extent of this liability is limited to the cost of the replacement of the defective item and not to fitting or consequential damages.

Description	Minimum Operating Pressure (bar)	Maximum Cold Working Pressure (bar)	Maximum Hot Working Pressure (bar)
2 Hole Sink Mixer	0.1 bar	6.0 bar at temperatures up to 85oC	Not Suitable for Maximum Hot Working Pressure

Care

To maintain the surface finish, simply wipe occasionally with a mild detergent on a soft damp cloth. Dry, using a soft cloth. Never use abrasive cleaners or chemical household cleaners and avoid contact with

concentrated bleach.

Maintenance
No regular maintenance is required for this product.
In case of complete replacement Pegler recommend service valves should be fitted to the supply inlets.

For any further help or replacement parts please contact the Service Support Team on 0800 1560050.

Regulations
It is important to ensure that the water supplies to your taps and mixers are connected in accordance with the water regulations (WRAS) requirements and good plumbing practice.

It is Pegler's recommendation and good plumbing practice that the supplies of hot and cold water to the mixer should be at equal (balanced) pressures in order to provide a consistent flow. Supplies should be from a common source, either mains or tank fed. If supplies are not equal pressures then non return valves should be fitted.

Component	Material
Body	Cast Brass
Backnut	Forged Brass
Anti-rotational washer	Polyethelene
Head	Brass Bar
Spindle	Brass Bar
Seals	Rubber
Seat Washer	Rubber
Valve	Brass Bar
Headwork Washer	Stainless Steel

2523QT

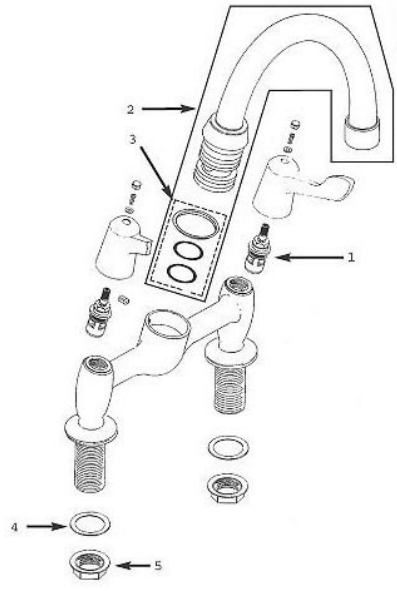

B

Spare Key	Description	Code	Barcode	Date From	Date To	Price (£) ex VAT
B	INH1 INDICE HOT	814001	5013866056314	01/01/1900	To Current	£1.64
B	INC1 INDICE COLD	814002	5013866056321	01/01/1900	To Current	£1.64

A

Spare Key	Description	Code	Barcode	Date From	Date To	Price (£) ex VAT
A	HD18CP 1/2 LEVER HANDLE CW INDICES CP	814076	5013866056437	01/01/1900	To Current	£59.06

1

Spare Key	Description	Code	Barcode	Date From	Date To	Price (£) ex VAT
1	HKC28 CPT CD QT HEADWORK COLD 1/2	814042	5013866056390	01/01/1900	To Current	£39.43
1	HKH29 CPT CD QT HEADWORK HOT 1/2	814043	5013866056406	01/06/2001	To Current	£39.43

2

Spare Key	Description	Code	Barcode	Date From	Date To	Price (£) ex VAT
2	SPT2CP SPOUT ASSEMBLY CHROME	811070	5013866053924	01/01/1900	To Current	£76.09

3

Spare Key	Description	Code	Barcode	Date From	Date To	Price (£) ex VAT
3	ORS7 O RING SET	811273	5013866054334	01/01/1900	To Current	£3.81

4

Spare Key	Description	Code	Barcode	Date From	Date To	Price (£) ex VAT
4	ARW2 1/2 ANTI ROTATIONAL WASHER	814162	5013866056758	01/01/1900	To Current	£1.64

5

Spare Key	Description	Code	Barcode	Date From	Date To	Price (£) ex VAT
5	1/2 BN 915 BACKNUT	817071	5013866023354	01/01/1900	To Current	£2.82

Pegler Yorkshire

