Product datasheet
Characteristics

XY2CE2A250EX

e-stop rope pull switch XY2CE - LH side -1NC+1NO - booted pushbutton



Main

Range of product	Preventa XY2
Product or component type	Latching emergency stop trip wire switch
Device short name	XY2CE
Local signalling	Without pilot light
Reset	By booted push-button
Contacts type and composition	1 NC + 1 NO
Trigger cable anchor point	LH side

Complementary

Number of cables	1
Trigger cable maximum length	70 m
Housing colour	Red RAL 3000
Auxiliary contacts operation	Slow-break
Connections - terminals	Screw clamp terminal, clamping capacity: 1 x 0.5...2 x 1.5 mm²
Tightening torque	0.8...1.2 N.m
Cable entry number	2 plain hole with blanking plug 1 plain hole (ISO M20) for cable gland
Marking	II2 D-Ex tb IIIC T85°C Db IP65
Safety level	Can reach category 4 with the appropriate monitoring system and correctly wired conforming to EN/ISO 13849-1 Can reach PL = e with the appropriate monitoring system and correctly wired conforming to EN/ISO 13849-1 Can reach SIL 3 conforming to EN/IEC 61508
Safety reliability data	B10d = 300000 value given for a life time of 20 years limited by mechanical or contact wear
Mechanical durability	60000 cycles
Distance between cable supports	10 m
[Ie] rated operational current	3 A at 240 V AC-15, A300 conforming to EN/IEC 60947-5-1 appendix A 0.27 A at 250 V DC-13, Q300 conforming to EN/IEC 60947-5-1 appendix A
[Ithe] conventional enclosed thermal current	10 A
[Ui] rated insulation voltage	400 V, degree of pollution 3 conforming to EN/IEC 60947-1 400 V, degree of pollution 3 conforming to EN/IEC 60947-1 300 V conforming to UL 508 300 V conforming to CSA C22.2 No 14
[Uimp] rated impulse withstand voltage	4 kV
Positive opening	With, conforming to EN/IEC 60947-5-1 section 3
Resistance across terminals	<= 25 MOhm conforming to NF C 93-050 method A <= 25 MOhm conforming to EN/IEC 60255-7 category 3
Short circuit protection	10 A cartridge fuse type gG conforming to EN/IEC 60269
Width	195 mm
Depth	105 mm
Height	142 mm

Environment

The information provided in this documentation contains general descriptions and/or technical characteristics of the performance of the products contained herein.
This documentation is not intended as a substitute for and is not to be used for determining suitability or reliability of these products for specific user applications.
It is the duty of any such user or integrator to perform the appropriate and complete risk analysis, evaluation and testing of the products with respect to the relevant specific application or use thereof.
Neither Schneider Electric Industries SAS nor any of its affiliates or subsidiaries shall be responsible or liable for misuse of the information contained herein.

standards	ATEX D 94/9/CE EN/IEC 60079-0 EN/IEC 60079-31
dust zone	Zone 21 - 22
product certifications	INERIS 04ATEX0015
protective treatment	TC
ambient air temperature for operation	-20...60 °C
ambient air temperature for storage	-40...70 °C
vibration resistance	10 gn (10...300 Hz) conforming to EN/IEC 60068-2-6
shock resistance	50 gn for 11 ms conforming to EN/IEC 60068-2-27
class of protection against electric shock	Class I conforming to EN/IEC 61140 Class I conforming to NF C 20-030
IP degree of protection	IP65

Offer Sustainability

Sustainable offer status	Green Premium product
RoHS (date code: YYWW)	Compliant - since 0931 - Schneider Electric declaration of conformity
REACh	Reference not containing SVHC above the threshold
Product environmental profile	Available
Product end of life instructions	Need no specific recycling operations

Contractual warranty

Warranty period	18 months

Dimensions

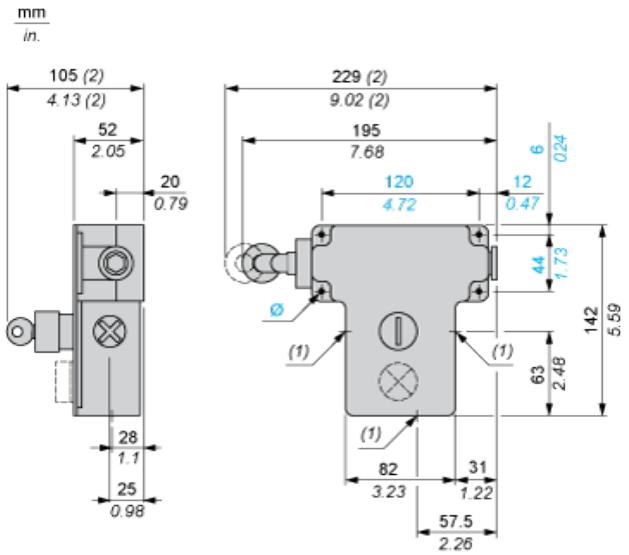

(1) 3 plain holes for Pg 13.5 cable gland.

(2) Maximum extension.

Ø 4 elongated holes Ø 6 mm/0.24 in.

Electrical Curves

AC Supply 50/60 Hz Inductive Circuit

2-pole Contact Block

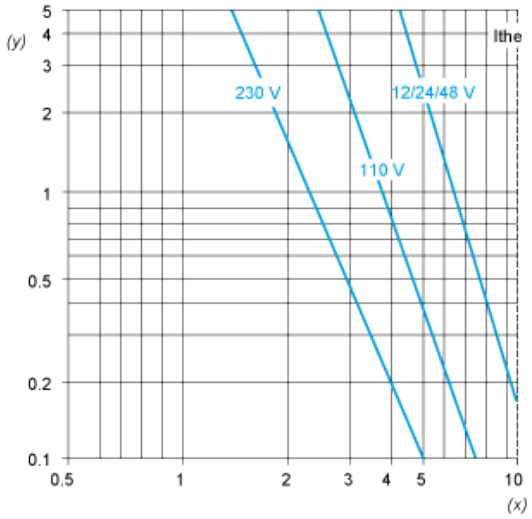

Y Millions of operating cycles

X Current in A

DC Supply Power Broken in for 1 Million Operating Cycles Inductive Circuit

Voltage	V	24	48	120
⎓	W	13	9	7