Sensor, Series ST6

R412022862

General series information
AVENTICS Series ST6 Magnetic proximity sensors

- The AVENTICS Series ST6 sensors are suitable for mounting in the 6 mm T-slot as well as sensor mounting to the cylinder. They are suited for mounting to all AVENTICS round cylinders, tie rod cylinders, and profile cylinders. With their optimized, compact shape, the sensors can be flush-fit into existing slots and integrated into any machine environment, even with sensor mounting. Retaining ribs on the side of the sensor enable simple mounting, including in hard-to-reach locations or for overhead assembly. The durable mounting screw holds the sensor in the desired position and can withstand shocks or vibrations.



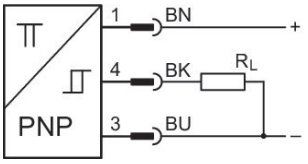

Technical data

Industry	Industrial
Direct mounting for series	PRA PRE CCI KPZ SSI GPC CVI
Indirect mounting for series	TRB ITS CCL-IS MNI CSL-RD RPC ICS-D2 ICM KHZ TRR

Slot width	6 mm T-slot
Cable	with cable
Type of contact	electronic PNP
Nominal current, actuated state	< 30 mA
Quiescent current (without load)	< 8 mA
Hysteresis	≥ 0,2 mT
Switching capacity	Reed, 3-pin: max. 6 W
Certificates	CE declaration of conformity cULus RoHS UL (Underwriters Laboratories)
Protection class	IP65 IP67
Min. ambient temperature	-30 °C
Max. ambient temperature	80 °C
Voltage drop U at Imax	≤ 2,5 V
DC switching current, max.	0.13 A
Max. switching frequency	1000 Hz
Switching point precision	±0,1 mT
Switching logic	NO (make contact)
LED status display	Yellow
Electrical connection 2, type	Plug
Electrical connection 2, thread size	M8x1
Electrical connection 2, number of poles	3-pin
Operating voltage DC, min.	10 V DC
Operating voltage DC, max.	30 V DC
Short circuit resistance	short circuit resistant Protected against polarity reversal
Shock resistance	30 g / 11 ms
Vibration resistance	10 - 55 Hz, 1 mm
Cable length L	0.3 m

Material

Housing material	Polyamide
Material cable sheath	Polyvinyl chloride
Material locking screw	Stainless Steel
Part No.	R412022862

Technical information

The pressure dew point must be at least 15 °C less than ambient and medium temperature and may not exceed 3 °C.

The oil content of compressed air must remain constant during the life cycle.

Use only the approved oils from AVENTICS. Further information can be found in the “Technical information” document (available in https://www.emerson.com/en-us/support).

Dimensions

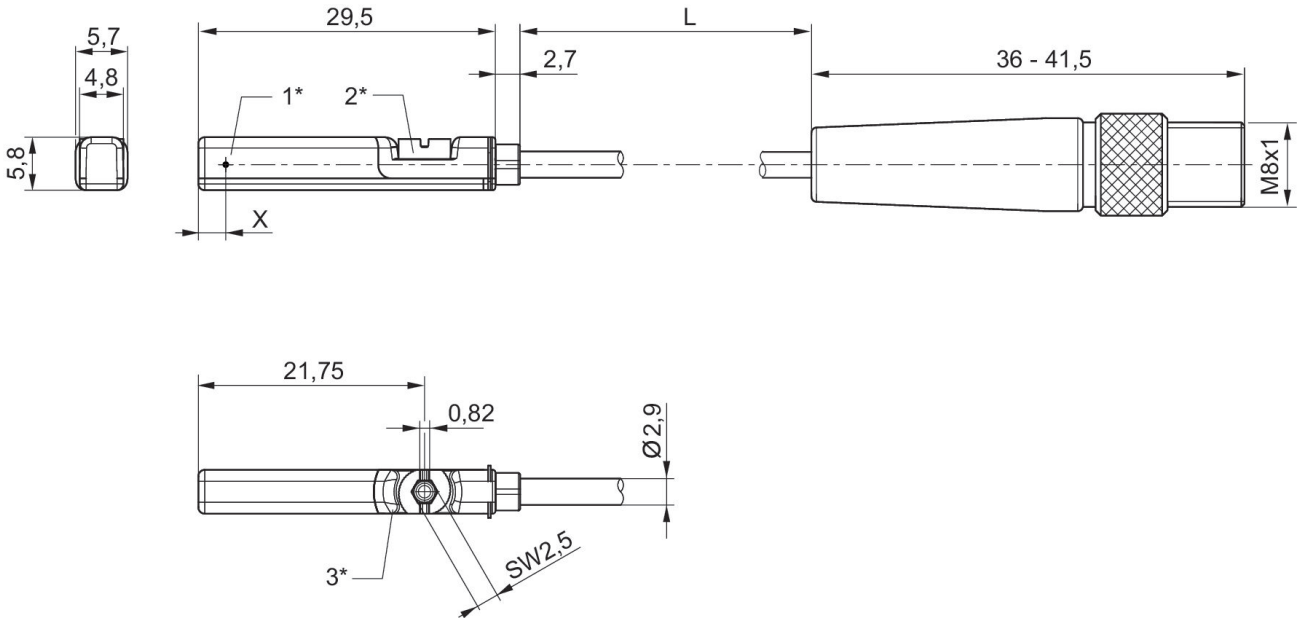

1* = switching point 2* = locking screw 3* = LED window, transparent
L = cable length
X = electronic: 11,6 mm, Reed: 8,3 mm

Pin assignment M8x1 (3-pin)

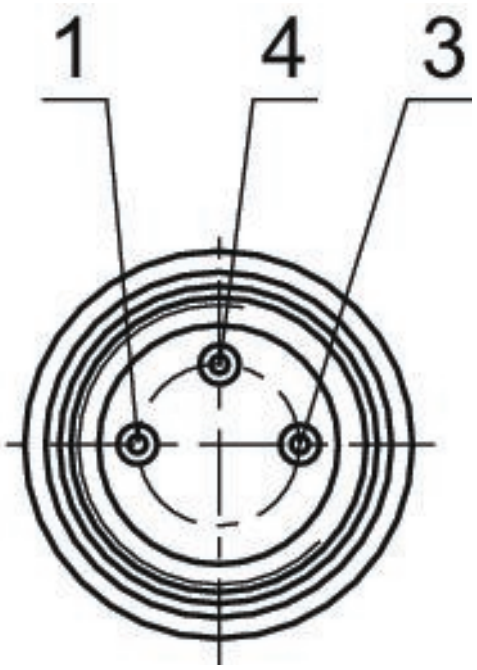

Pin assignments

Pin	Allocation
1	(+)
3	(-)
4	(OUT)