MSUD VALVE PLUG FORM A 18MM

PVC 3X0.75 black 10m

MSUD
Form A (18 mm)
24 V AC ±20% / DC ±25%
LED and suppression
Bridged PE

Further cable lengths on request. Plastic housings with good resistance against chemicals and oils. The resistance to aggressive media should be individually tested for your application. Further details on request.

Link to Product

Illustration

The information in this brochure has been compiled with the utmost care.
Liability for the correctness completeness and topicality of the information is restricted to gross negligence. Version: 01/20

stay connected



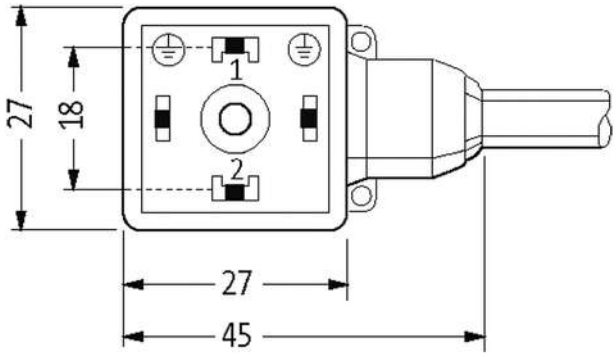

Height: 30 mm

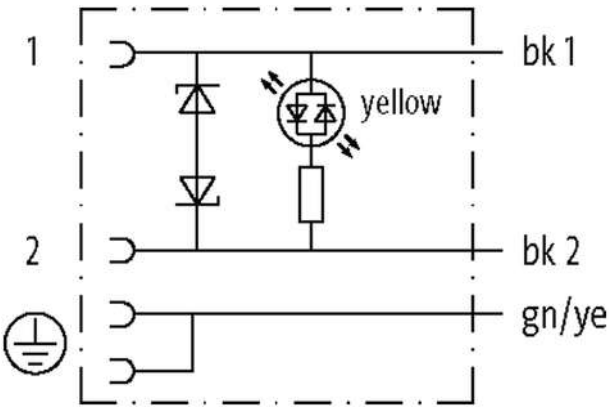

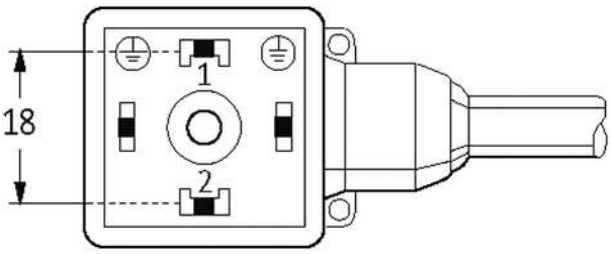

Product may differ from Image

Approvals

cCSAus	* only for products with UL/CSA approved cable

Form

Form	18021

The information in this brochure has been compiled with the utmost care.
Liability for the correctness completeness and topicality of the information is restricted to gross negligence. Version: 01/20

Cables	
No./diameter of wires	3× 0.75 mm²
Wire isolation	PVC (bk num, gnye)
Material (jacket)	PVC
Outer Ø	5.9 mm ±5%
Bend radius (moving)	10× outer Ø
Temperature range (fixed)	-30...+70 °C
Temperature range (mobile)	-5...+70 °C
Cable identification	616
Cable Type	1 (PVC)
Approval (cable)	CE conform
Cable weight [g/m]	61,60
Material (wire)	Cu wire, bare
Resistor (core)	max. 26 Ω/km (20 °C)
Single wire Ø (core)	0.2 mm
Construction (core)	24× 0.2 mm (multi-strand wire class 5)
Diameter (core)	3× 0.75 mm²
AWG	similar to AWG 18
Material (wire isolation)	PVC
Material property (wire isolation)	CFC-, cadmium-, silicone- and lead-free
Shore hardness (wire isolation)	43 ±5 D
Wire-Ø incl. isolation	1.8 mm ±5%
Color/numbering of wires	bk numbered, gnye longitudinally striped
Stranding combination	3 wires twisted
Shield	no
Material (jacket)	PVC
Material property (jacket)	CFC-, cadmium-, silicone- and lead-free
Shore hardness (jacket)	80 ±5 A
Outer-Ø (jacket)	5.9 mm ±5%
Color (jacket)	black
chemical resistance	good resistance to oil, gasoline and chemicals
Nominal voltage	300/500 V AC
Test voltage	3000 V AC
Current load capacity	to DIN VDE 0298-4
Temperature range (fixed)	-30...+70 °C
Temperature range (mobile)	-5...+70 °C
Bend radius (fixed)	5× outer Ø
Bend radius (moving)	10× outer Ø
Jacket Color	black

Technical Data	
Operating voltage	24 V AC ±20% / DC ±25%
Rated surge voltage	0.8 kV
Operating current per contact	max. 4 A
Current consumption	max. 15 mA
Material group	IEC 60664-1, category I
Switch off peak	max. 55 V
Switch off delay time	max. 20 ms
LED display	yellow
Locking of ports	M3 (recommended torque 0.4 Nm)
Protection	IP67 inserted and tightened (EN 60529)
Locking material	Steel (galvanized)

The information in this brochure has been compiled with the utmost care.
Liability for the correctness completeness and topicality of the information is restricted to gross negligence. Version: 01/20

Material	PBT
Housing	Black plastic (gray on request)
Additional suppressor	Diode/Z-Diode
General data	
Pollution Degree	3
Material (gasket)	PUR
Temperature range	-25...+85 °C, depending on cable quality
Commercial data	
country of origin	CZ
customs tariff number	85444290
EAN	4048879193733
eClass	27279218
Packaging unit	1

The information in this brochure has been compiled with the utmost care.
Liability for the correctness completeness and topicality of the information is restricted to gross negligence. Version: 01/20