Brand of NTN corporation

Technical data



6020EE

Single row deep groove ball bearings

Deep groove ball bearing, radial contact, pressed steel cage, contact seals on both sides

VISUAL (S)

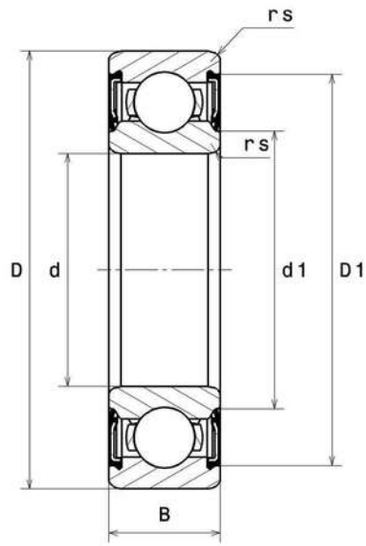

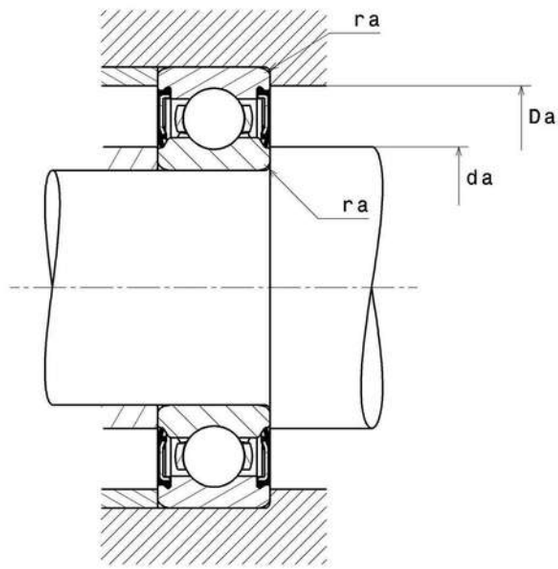

NTN Europe
1 rue des Usines · BP 2017 · 74010 Annecy Cedex · France · Tel. +33 (0)4 50 65 30 00
S.A. au capital de 322 639 919 € · RCS ANNECY B 325 821 072 · Id. Fiscale : FR 48 325 821 072
SIRET 325 821 072 00015 · Code APE 2815 Z · Code NACE 28.15

6020EE
Single row deep groove ball bearings

PRODUCT DEFINITION	
Brand	SNR
d - Internal diameter	100 mm
D - External diameter	150 mm
B - Bearing/Inner ring width	24 mm
d1 - External diameter inner ring	110,5 mm
D1 - Inner diameter outer ring	139,1 mm
rs - Min fillet radius	1,5 mm
Radial clearance class	CN

PRODUCT PERFORMANCE	
C - Dynamic load	59400000 mN
C0 - Static load	54200000 mN
Cu - Fatigue limit load	2200000 mN
f0 - Coefficient	15.9
N lim - Grease lubrication limit speed	16200 °/s
N lim - Mechanical Limit Speed	15600 °/s
Tmin - Min operating temperature	243,15 °K
Tmax - Max operating temperature	393,15 °K

BEARING FREQUENCIES	
BPFO - Over rolling frequency on outer ring (60 rpm)	6.595 Hz
BPFI - Over rolling frequency on inner (60 rpm)	8.405 Hz
BSF - Over rolling frequency on rolling element (60 rpm)	8.168 Hz
FTF - Rotational frequency - cage (60 rpm)	0.44 Hz

6020EE
Single row deep groove ball bearings

ABUTMENT	
da min - Min shoulder diameter IR	108 mm
da max - Max shoulder diameter IR	110,5 mm
Da max - Max shoulder diameter OR	142 mm
ra max - Max shaft & housing fillet radius	1,5 mm

INDUSTRY CALCUL FACTORS

Equivalent dynamic radial load

P = X.Fr + Y.Fa

$\frac{f_0 F_a}{C_0}$	e	Fa / Fr ≤ e		Fa / Fr > e	
		X	Y	X	Y
0.172	0.19	1	0	0.56	2.3
0.345	0.22				1.99
0.689	0.26				1.71
1.03	0.28				1.55
1.38	0.3				1.45
2.07	0.34				1.31
3.45	0.38				1.15
5.17	0.42				1.04
6.89	0.44				1

Equivalent static radial load

Po = Xo.Fr + Yo.Fa

X_0	Y_0
0.6	0.5

For single or DT bearing arrangement :

If Po <Fr, then use Po = Fr