E30421

Angle bracket

UNIVERSAL MOUNTING BRACKET

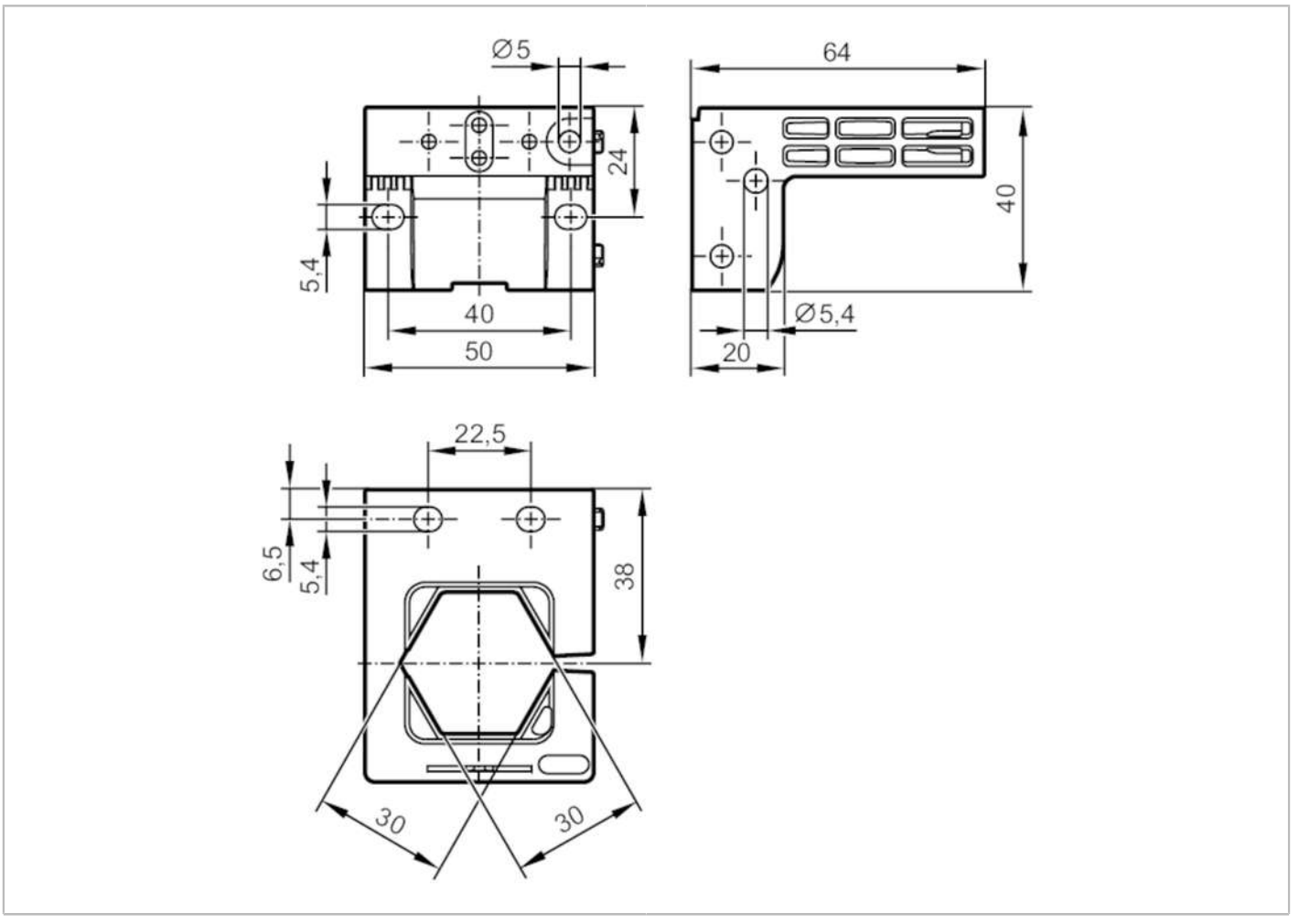

Mechanical data		
Weight	[g]	55.5
Dimensions	[mm]	40 x 50 x 64
Materials		PA 6.6-GF25-M15

Accessories		
Items supplied		socket head screw: 1 x M5 x 40
		square nut: 1 x M5
		recess self-tapping screws : 3 x 3 mm

Remarks		
Pack quantity		1 pcs.