Brand of NTN corporation

Technical data

UCPA209

Bearing units



Grey cast housing, radial insert ball bearing with socket set screws,seal with slinger

KIT CONTENT

UC209G2, PA209

VISUAL (S)

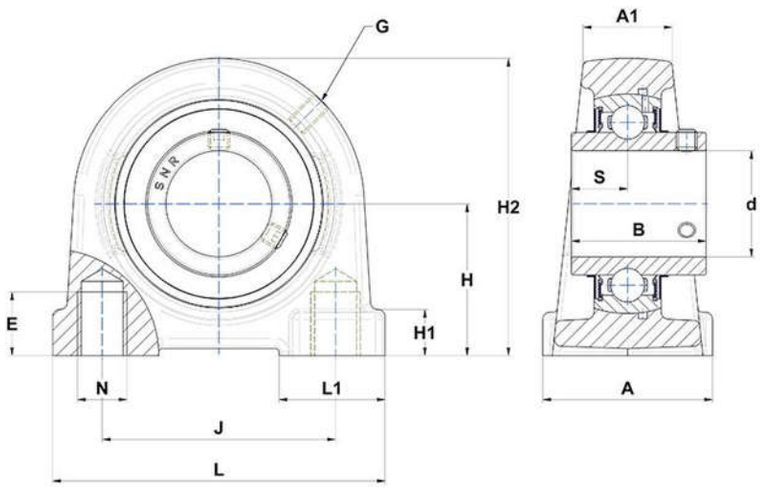

PRODUCT DEFINITION

Brand	SNR
A - Housing width	60 mm
A1 - Housing top width	32 mm
B - Width of Inner Ring	49,2 mm
d - Shaft diameter	45 mm
E - Mounting hole thread depth	25 mm

PRODUCT DEFINITION	
G - Grease fitting	M6x1
H - Distance mounting base to centerline spheric. seating diam.	54,2 mm
H1 - Housing foot height	13 mm
H2 - Housing height	108 mm
J - Mounting holes distance	90 mm
L - Housing length	120 mm
L1 - Housing foot length	42 mm
N - Mounting hole dimension	M14
S - Distance front side/bearing centre	19 mm

PRODUCT PERFORMANCE	
C - Dynamic load rating	31850000 mN
C0 - Static load rating	20800000 mN
Operating temperature min.	253,15 °K
Operating temperature max.	373,15 °K

OTHER FEATURES	
Mass	2,18 kg
Recommended tightening torque for set screw	11.5 N-m