Operating manual

AxiForce60



Product type, manufacturing date (calendar week/year of construction) and if required, conformity mark can be found on the nameplate on the product.
Please provide us with the contents of the nameplate when making enquiries about the product.

ebm-papst St.Georgen GmbH & Co. KG
Hermann-Papst-Straße 1
D - 78112 St.Georgen

Phone: +49 (0) 7724 / 81-0
Fax: +49 (0) 7724 / 81-1309

info2@de.ebmpapst.com
www.ebmpapst.com

As per: 02.02.2026
Version: 1 2
Article number: 8300101151

Original operating manual

INDEX

1 SAFETY REGULATIONS AND INFORMATION	**1**
2 INTENDED USE	**3**
3 TECHNICAL DATA	**3**
4 CONNECTION AND COMMISSIONING	**4**
5 FAULTS, POSSIBLE CAUSES AND REMEDIES	**5**
6 COMPLIANCE	**5**

1 SAFETY REGULATIONS AND INFORMATION

Read the operating manual carefully before commencing work at the product. Pay attention to the following warnings to avoid risk to persons or malfunctioning.
This operating manual is an integral part of the product.
In the event of resale or change of ownership the operating manual must accompany the product. This operating manual may be copied and provided as information on potential risks and their avoidance.

Hazard classification of warning notices

The following risk ratings are used in this operating manual to denote potential risk situations and important safety instructions:



DANGER
This is a potentially dangerous situation and warns of an impending health risk or risk of fatal injury if this warning is not observed. Observe this warning.

WARNING
The dangerous situation can occur and can result in major or fatal injuries if the warning is not observed. Work with extreme care.

CAUTION
The dangerous situation can occur and can result in minor injuries or damage to property if the warning is not observed.

NOTE
A potentially dangerous situation can occur and results in damage to property if not avoided.

Qualification of personnel

Only skilled electricians are permitted to install the product, to carry out the test run and to work at the electrical unit.
Only instructed and authorized skilled personnel are permitted to transport, unpack, operate and service the product.

Basic safety regulations

Safety risks related to the product must be reassessed after installing in the final device.
The operating manual was developed in accordance with European market requirements and may need adapting to the market requirements of the country in question.

When working at the product, observe the following:

➢ Do not make any changes to the product.



WARNING
Impermissible high load

➢ Stop the product immediately after impermissible loading (e.g. impact, heat, overvoltage).

Electrical voltage and current



DANGER
Electrical voltage

Regularly check the electrical equipment of the product.
- ➢ Eliminate immediately loose connections and defective cables.

Safety and protective functions



DANGER
Missing safety device and faulty protective equipment.

Without protective equipment severe injuries can occur, e.g. by taking hold of the rotating equipment.
- ➢ Operate the product with protection guards only.

Electromagnetic radiation

Electromagnetic compatibility (EMC) may affect the system integration of the product due to interaction.

- ➢ Ensure the electromagnetic compatibility of the entire system.

Moving parts



DANGER
Self-starting product

If voltage is applied, the motor automatically restarts after a mains failure or when blocking has been eliminated.
- ➢ Do not stand in the danger zone of the product.
- ➢ Switch off the mains voltage when working on the product and secure against switching on again.





DANGER
Rotating impeller

Contact with the impeller may result in injuries. Long hair, loose-fitting garments and jewellery can be caught and pulled into the product. Risk of injury.
- ➢ Before starting the product, ensure that it is securely fixed and that the guards are in place.
- ➢ Do not wear loose-fitting garments or jewellery when working on moving parts.
- ➢ Protect long hair by wearing a hair net.



WARNING
Parts transported by the airflow

The product can transport small parts in the airflow and catapult them out.
- ➢ Ensure that there are no loose small-parts in the intake and exhaust area.
- ➢ Do not stand in the danger zone of the product.



CAUTION
High risk of fire spreading

Can cause fire to spread.
- ➢ Never direct the airflow (intake/exhaust side) at a potential source of fire.

Hot surface



CAUTION
High temperature at motor housing.
Risk of burns

- ➢ Provide adequate protection against accidental contact.

Transport

Only transport the product in its original packaging. Secure during transport.
The vibration values, temperature and climate ranges should not be exceeded during transport.

Storage

- ➢ Store the device, partially or fully assembled, in a dry place, protected against the weather and free from vibration, in the original packaging in a clean environment.
- ➢ Protect the device against environmental effects and dirt until final installation.
- ➢ To guarantee trouble-free operation and the longest possible service life do not store the device for more than one year.
- ➢ Even devices explicitly intended for outdoor use are to be stored as described prior to commissioning.
- ➢ Maintain the storage temperature, *see Chapter 3, Technical Data*

Cleaning



NOTE
Product damaged during cleaning

- ➢ Clean the product carefully with a moist cloth without applying pressure to the rotor. Do not use cleaning agents that contain acids, caustic solutions or solvents.

Disposal

When disposing of the product, observe all requirements and regulations that are relevant in your country.

2 INTENDED USE

The product is designed exclusively as a built-in device for conveying air according to the technical data.
Every use that is not in accordance with the intended purpose, is regarded as misuse of the product.
On-site installations must comply with the mechanical, thermal and service life requirements, *see Chapter 3, Technical Data.*

Intended use includes:

- Operating the product with all protective equipment
- Do not put the product into operation before it has been installed in the customer's application
- Observation of the operating manual

Use for other than the intended purpose

Using the product for the purposes mentioned below is prohibited and can be dangerous:

- Conveyance of air that contains abrasive particles.
- Conveyance of air that has a highly corrosive effect.
- Conveyance of air that has a high dust load, e.g. vacuuming sawdust.
- Conveyance of inflammable gases/particles.
- Contact with materials that can damage the product, e.g. acids, caustic solutions, solvents.
- Exposure to radiation that can damage product components, e.g. strong UV rays or thermal radiation.
- Operating during external vibration.
- Operating the product close to inflammable materials or components.
- Operating the product in an explosive atmosphere
- Use of the prouct as a safety component or for performing safety-relevant functions.
- Operating in medical devices with life-sustaining or life-saving function if not validated together with ebm-papst.
- Operating in non-stationary systems, e.g. railway vehicles, aircraft and spacecraft if not validated together with ebm-papst.
- Operating with fully or partially dismantled or manipulated protective equipment.
- Operating the product under conditions other than those mentioned in the technical data.
- Furthermore, all fields of application not mentioned under intended use.

An in situ assessment must be conducted of the heating behavior (appropriate and inappropriate operation), the protection against contact, electrical shocks, impact of foreign objects or water and the usage at altitudes higher than 2000 meters.

Contact ebm-papst if you have specific queries regarding the product.

3 TECHNICAL DATA

Drawing, see annex

Technical description

Airflow direction	Air outlet over struts
Rotating direction looking at rotor	Counterclockwise
Nominal voltage	12 V
Current consumption	230 mA
Power consumption	2,7 W
Speed	7.000 1/min
Max. free-air flow	48,5 m3/h
IP-protection type	IP 68 (for fan only, not for connector if applicable) **)
Mass	60,7 g
Protection class	III
Max. torque when mounted across both mounting flanges	Wire outlet corner: 30 Ncm Remaining corners: 30 Ncm
Screw size	ISO 4762 - M3 degreased, without an additional brace and without washer

**) The specification of the IP protection refers to the conditions mentioned in certification of the fan. The above mentioned short description of the protection scope is not final. For detailed information of the respective protection scope and definitions, see certification as well as DIN EN 60529 (protection by housings) and ISO 20653 (for vehicles) with the letter K.

Short description of the IP-protection type:
Solid particle Protection: Dust tight.
Protection against deliberate contact: Protected against contact to hazardous parts with a wire.
Protection against water: The fan test according to IP68 (Based on IEC 60529), is conducted in non-operating mode. The fan is tested by a complete immersion in water for a period of 2h at a water-level of 1,2m. Electrical connections are not immersed since they are customer specific.

Ambient conditions

Permitted ambient temperature	
Transport and storage	**Operation**
-40 °C ... 80 °C	-40 °C ... 70 °C

Vibration and shock load

The mechanical Vibration and Shock data for the product is available. If the operation of the product should take place in a sinusoidal vibration containing environment or fixing the product on sinusoidal vibrating surface, please contact our technical support.

Do not operate your product in the resonance range.

4 CONNECTION AND COMMISSIONING

Connect mechanical parts



CAUTION
Risk of cutting/squashing when removing the product from the packaging and during mounting.

Grasp the housing and lift the product carefully out of the packaging. Avoid impact.

➢ Wear safety boots and cut-resistant gloves.



NOTE
Risk of damage to electronic components.

➢ Use ESD protective equipment when mounting.

Connect electrical parts

Connect to the mains after installation.



DANGER
Compliance with the electrical installation regulations

➢ Observe the connection regulations that are valid in your country. (e.g. fusing, GFCI)



CAUTION
Electrical voltage
The product is a built-in component and has no switch for disconnecting power.

➢ Only connect the product to current circuits that can be switched off by a switch (all poles disconnected). When working on the product, secure the system/machine in which the product is installed against switching on again.

NOTE
Electromagnetic compatibility (EMC) may affect the system integration of the product due to interaction.

➢ Ensure the electromagnetic compatibility of the entire system.

Voltage control



Speed control via the supply voltage is only permitted within the stipulated supply voltage range. Speed control via PWM of the supply voltage is not permitted.

Requirements:

- Before connecting the product, ensure that the supply voltage corresponds with the product voltage.
- Check whether the data on the nameplate corresponds with the interface data.



Only use cables that are designed for the current on the nameplate and the corresponding ambient conditions. Ensure that the electrical interface data is adequately protected (mechanical).

Find additional information in drawing or label.

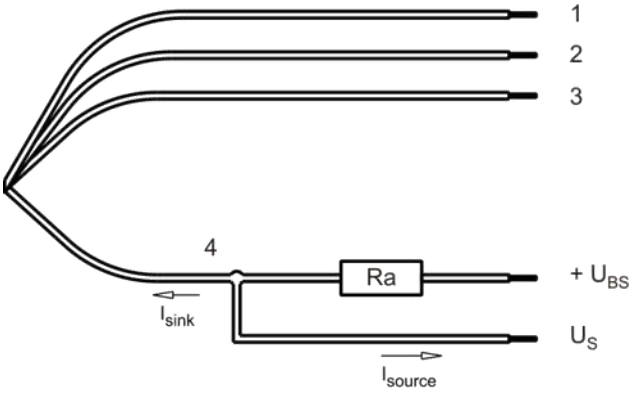

Wire	Color	Operation
1	red	+ UB
2	blue	- GND
3	violet	PWM
4	white	Tacho

The auxiliaries shown on the schematic diagram (which are required for the intended use) are not part of our delivery.

Check connections

NOTE
DC-fans <=60V are products of Protection Class III and must be operated with safety extra-low voltage.

Connect product

Check the product for visible damage and the operability of protective equipment before switching on.
If damage is visible, do not start the product.

5 FAULTS, POSSIBLE CAUSES AND REMEDIES

Replace your product by a new one, do not repair it.



DANGER
Electrical voltage at motor

- Wait five minutes after the voltage (all poles) has been switched off before opening the product.

Fault/ Error	Possible cause	Possible remedial action
Motor is not rotating	Mechanical blocking	Switch off, de-energize and eliminate mechanical blocking.
	Mains voltage fault	Check mains voltage, re-connect voltage supply.
	Connection faulty	Rectify connection, see pin connection.
	Motor is too hot	Allow motor to cool / identify cause of fault.
	Motor winding interrupted	Exchange product.
	Ambient temperature too high	Reduce ambient temperature if possible.
Impeller out of true	Unbalance of rotating parts	Clean product if still unbalanced after cleaning, exchange product.



Note

If the device is not operated for a lengthy period in installed condition in a dry environment, it is to be started up and operated at full speed for one hour at least every four months. If the device is not operated for a lengthy period in installed condition in a damp environment (e.g. outdoors), it is to be started up and operated at full speed for at least three hours once a month to move the bearings and allow any condensate that may have ingressed to evaporate.

In case of further faults, contact ebm-papst.

Technical safety inspection

What requires checking?	How to check?	Frequency
Protection against accidental contact/ protective clothing	Visual inspection	min. 1/2 yearly
Check product for damage	Visual inspection	min. 1/2 yearly
Fixation of product	Visual inspection	min. 1/2 yearly
Fixation of wires	Visual inspection	min. 1/2 yearly
Insulation of wires	Visual inspection	min. 1/2 yearly
Check impeller for wear/sediments/ corrosion	Visual inspection	min. 1/2 yearly

6 COMPLIANCE

The product bears the CE mark.

The CE mark is affixed to adequately sized nameplates.

Within the meaning of the EMC Guideline 2014/30/EU this document is intended as:

- Mounting instructions/operating manual as per Art. 18, Paragraph (1)
- Installation instructions as per Art. 4
- Operating manual as per Art. 9, Paragraph (3)
- Instructions for use/operating manual as per Art. 18, Paragraph (3)
- Maintenance instructions as per Art.4; Art. 18, Paragraph (1)

Usage restrictions for residential areas as per Art. 18, Paragraph (2)
Accompanying documents as per Art. 17, Paragraph (1)

Within the meaning of Directive 2014/35/EU - electrical equipment designed for use within certain voltage limits – this document is intended as:

- Instructions for use/operating manual as per Art. 6, Paragraph (7); Art. 8 Paragraph (4)

Within the meaning of the Directive 2006/42/EU Machine Guideline, this document is intended as

- Mounting instructions as per Art. 13, Paragraph 1b

The product bears the EAC mark.

The information in this document and in the product data sheet applies to mounting, installation, operation, use and maintenance.

The reproduction, distribution and utilization of this document as well as the communication of its contents to others without express authorization is prohibited. Offenders will be held liable for the payment of damages. All rights reserved in the event of the grant of a patent, utility model or design. Refer to protection notice ISO 16016!
Note: In the case of multilingual information in this document and in the applicable documents referred to in this document, only the English version shall be authoritative and legally binding in the event of contradictions in content.

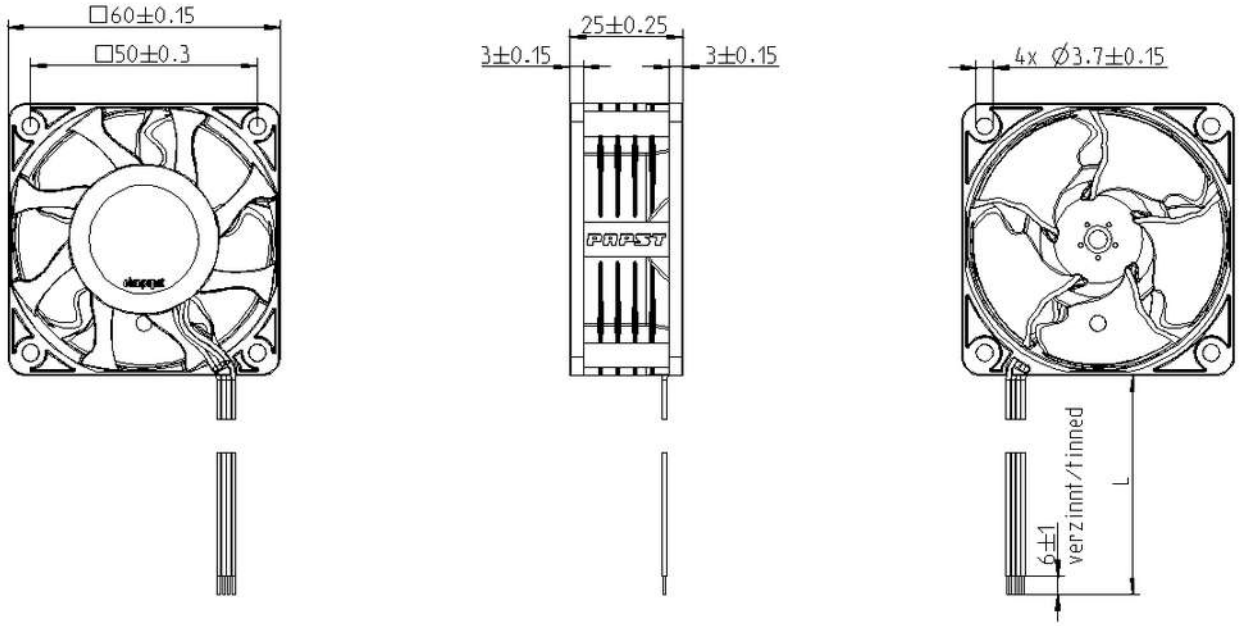

- kein Axialspiel der Kugellager durch Federaussgleich /
  No axial clearance of the ball bearings due to a pre-load spring

- Anzahl und Länge der Litzen siehe Produktspezifikation
  Number an Length of the wires see product specification

Title				Digital sign
First created for	Index	Doc type	Sheet	
	Designed name		Designed date	
Substitute for	Released name See digital sign		Released date See digital sign	
ebmpapst ebm-papst St.Georgen GmbH & Co. KG	Tolerances			
Scale 1:1	Format A3	Document status See digital sign		

Ind.	XM-Nr.	Date	Name	Fit	Deviations
2D-CAD:				Size	
3D-CAD:					