KUNBUS
industrial communication

EtherNet/IP™



User Manual
Gateway component for EtherNet/IP

PR100066 • 1/7/2016

Table of Contents

1 General Information ... 3
1.1 Disclaimer ... 3
1.2 Notes Regarding this User Manual ... 4
1.3 Validity ... 4
1.4 Limitation of Liability ... 4
1.5 Customer Service ... 4
2 Safe Use ... 5
2.1 User ... 5
2.2 Symbols ... 5
3 Overview ... 6
3.1 Functionality ... 6
3.2 Control Elements ... 8
3.3 Status LEDs ... 11
4 Installation ... 12
4.1 Preparations for Trouble-free Operation ... 12
4.2 Requirements ... 14
4.3 Connecting Gateway Components ... 15
4.4 Installing a Gateway in the Control Cabinet ... 16
4.5 Connecting a Power Supply ... 17
4.6 Connecting a Gateway to the Fieldbus ... 18
5 Configuration ... 19
5.1 Supported Size of the Process Data ... 19
5.2 Address Assignment ... 20
5.3 Ethernet/IP Configuration ... 21
5.4 Configuration of Modbus TCP ... 22
6 Technical Data ... 24
6.1 Technical Data ... 24

1 General Information

1.1 Disclaimer

© 2015 KUNBUS GmbH, Denkendorf (Germany)

The contents of this user manual have been prepared by KUNBUS GmbH with the utmost care. Due to technical development, KUNBUS GmbH reserves the right to change or replace the contents of this user manual without prior notice. You can always obtain the latest version of the user manual at our homepage: www.kunbus.de

KUNBUS GmbH shall be liable exclusively to the extent specified in General Terms and Conditions (www.kunbus.de/agb.html).

The contents published in this user manual are protected by copyright. Any reproduction or use for the in-house requirements of the user is permitted. Reproduction or use for other purposes is not permitted without the express, written consent of KUNBUS GmbH. Contraventions shall result in compensation for damages.

Trademark protection

- KUNBUS is a registered trademark of KUNBUS GmbH
- Windows® and Microsoft® are registered trademarks of Microsoft Corp.

KUNBUS GmbH
Heerweg 15 c
73770 Denkendorf
Germany

www.kunbus.de

1.2 Notes Regarding this User Manual

This user manual provides important technical information that can enable you as a user to integrate the Gateways into your applications and systems efficiently, safely and conveniently. It is intended for trained, qualified personnel, whose sound knowledge in the field of electronic circuits and expertise in EtherNet/IP TM is assumed.

As an integral part of the module, the information provided here should be kept and made available to the user.

1.3 Validity

This document describes the application of the KUNBUS Gateway with the product number:

– PR100066, release 00

1.4 Limitation of Liability

Warranty and liability claims will lapse if:

– the product has been used incorrectly,
– damage is due to non-observance of the operating manual,
– damage is caused by inadequately qualified personnel,
– damage is caused by technical modification to the product (e.g. soldering).

1.5 Customer Service

If you have any questions or suggestions concerning this product, please do not hesitate to contact us:

KUNBUS GmbH
Heerweg 15 C

73770 Denkendorf

+49 (0)711 3409 7077

support@kunbus.de
www.kunbus.de

2 Safe Use

2.1 User

The Gateway may only be assembled, installed and put into operation by trained, qualified personnel. Before assembly, it is absolutely essential that this documentation has been read carefully and understood. Expertise in the following fields is assumed:

- electronic circuits,
- basic knowledge of EtherNet/IP,
- work in electrostatic protected areas,
- locally applicable rules and regulations for occupational safety.

2.2 Symbols

The symbols used have the following meaning:

⚠ DANGER	**Danger** Always observe this information! There is a safety hazard that can lead to serious injuries and death.
⚠ CAUTION	**Caution** There is a safety hazard that can result in minor injuries and material damage.
NOTICE	**Note** There is a safety hazard that can result in material damage.

3 Overview

3.1 Functionality

The KUNBUS Gateway is a protocol converter. It allows communication between networks with different protocols.

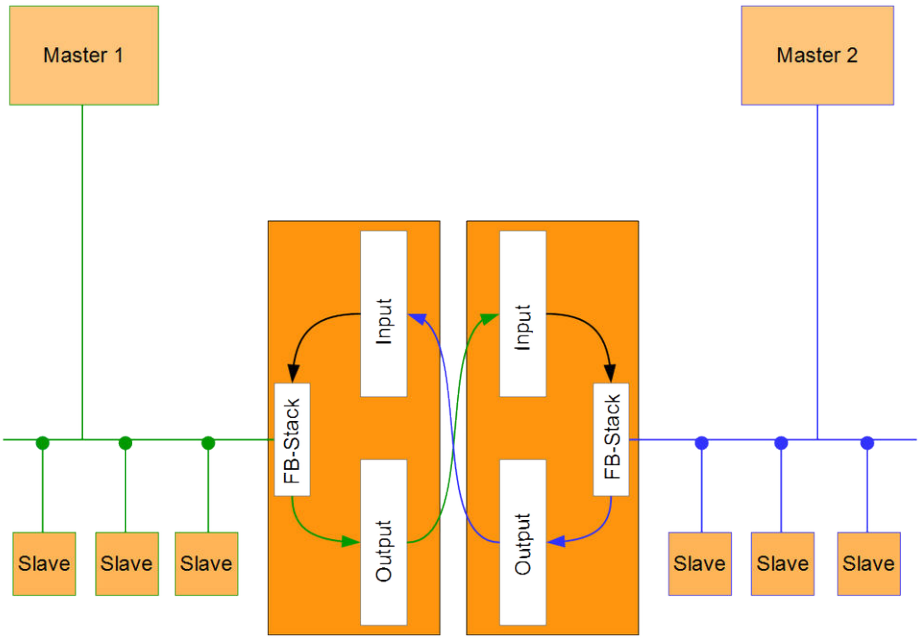

Illustration 1: Functionality

A Gateway consists of 2 gateway components that master one specific protocol each. You can combine these gateway components as you wish. This design offers you a high degree of flexibility, since you can exchange the individual gateway components at any time. The following gateway components are currently available as slaves:

- CANopen
- CC-Link
- DeviceNet
- EtherCAT
- EtherNet/IP
- Modbus RTU
- Modbus TCP
- POWERLINK
- PROFIBUS
- PROFINET
- Sercos III

Features

This gateway component enables communication with Ethernet/IP and Modbus TCP. It supports the following functions:

- RPI
  Minimal Requested Packet Interval: 1 ms
- ACD (Address Conflict Detection)
- DLR
  You can use the gateway component in a Device Level Ring.

3.2 Control Elements

Front view

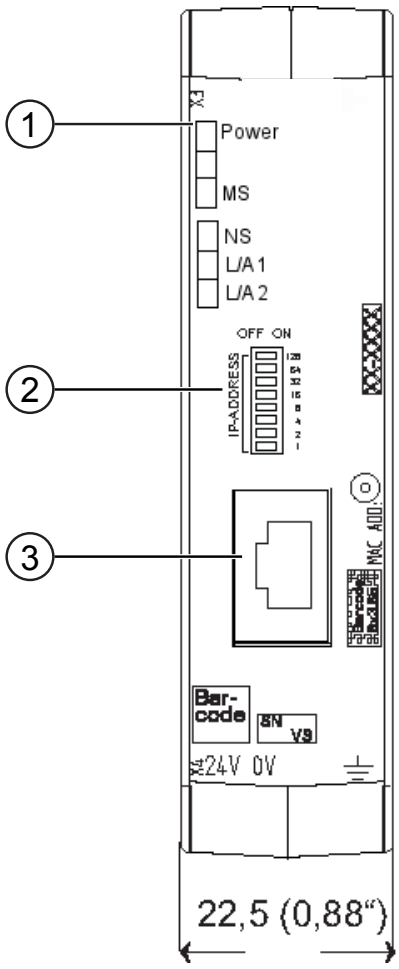

Illustration 2: Front view

1	Status LEDs
2	Coding switch 8-pin DIP switch for setting the IP address.
3	Fieldbus connection RJ45 socket for the connection to the fieldbus (2 sockets in all, s. figure top view)

Top

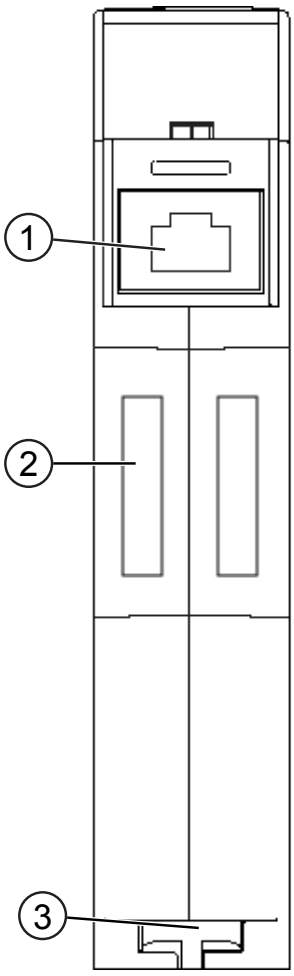

Illustration 3: Top

1	Fieldbus connection RJ45 socket for connection to the fieldbus (2 pcs, see figure front view).
2	Interconnect ports for interconnecting the gateway components.
3	Locking clamps for securely attaching the gateway component to the DIN rail.

Bottom

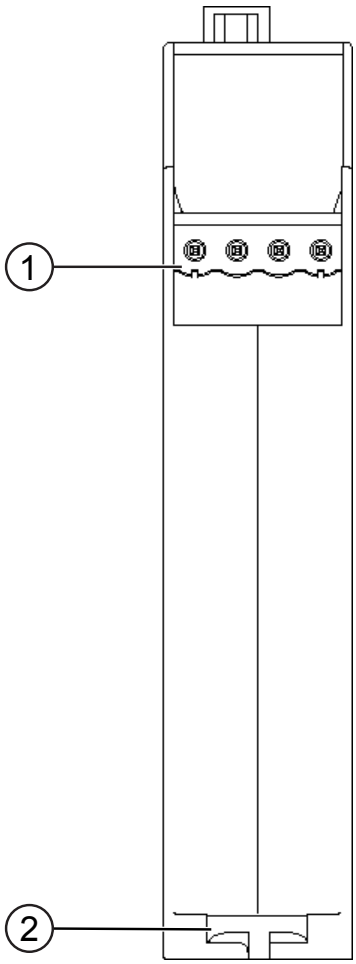

Illustration 4: Bottom

1	Mains connection with 24 V power supply
2	Locking clamps for securely attaching the gateway component to the DIN rail.

3.3 Status LEDs

The signals of the status LEDs for EtherNet/IP have the following meaning:

LED designation	Signal	Meaning
Power	off	Gateway component not running
	blinks, green	Initialization phase not yet completed
	on, green	Operational
	flashes, red	Correctable error (e.g. second gateway component missing)
	on, red	Serious error/defect in the gateway
MS	off	No power supply
	on, green	Gateway component operational
	blinks, green	Configuration not completed
	on, red	Unrecoverable error
	flashes, red	Configuration error
	flashes red and green	Self-test
NS	off	Gateway component is switched off or has no IP address
	blinks, green	IP address set but no CIP connection has been established yet
	on, green	Connection is established
	flashes, red	Connection interrupted (e.g. due to time-out)
	on, red	Set IP address is already being used by another network subscriber
L/A 1 + 2	off	No connection
	green	Connection to another device. No data exchange takes place.
	blinks, green	Connection established. Data exchange takes place.

4 Installation

4.1 Preparations for Trouble-free Operation

In the following section we have compiled some general information for you that is important for trouble-free operation. If you are already acquainted with this topic, you can skip to the next section. There, you will learn about which conditions are necessary for installing the gateway.

Cable routing

Route your cables separately in cable groups. This will protect your gateway from any unintended electromagnetic interferences.

The following groups should be routed separately from each other:

Group	Line
A	Data and power supply lines for: DC voltage below 60 V AC voltage below 25 V
B	Data and power supply lines for: DC voltage between 60 V and 400 V AC voltage between 25 and 400 V
C	Power supply lines above 400 V

- You can route cables of the same group together in cable ducts or bundles.
- Cables of group A and B:
  - Route the groups in separate bundles or
  - in cable ducts at a minimum distance of 10 cm from each other.
- Cables of group C
  - Route the groups in separate bundles or
  - in cable ducts at a minimum distance of 50 cm from the other groups.

Shielding

Shield your cables. This will reduce any unintended electromagnetic interferences.

Potential equalization

Potential differences occur when devices are connected to different earths. These potential differences cause malfunctions.

To prevent malfunctions, you have to route an equipotential equalization conductor.

When doing so, bear in mind the following points:

- Select an equipotential equalization conductor with low impedance.
- Select the following as a reference value for the cross-section of the potential equalization cable:
  - 16 mm^2 for potential equalization cables of up to 200 m in length
  - 25 mm^2 for potential equalization cables of more than 200 m in length
- Use potential equalization cables made of copper or galvanized steel.
- Connect potential equalization cables extensively with the earth rail.
- The smallest surfaces possible should be sandwiched between potential equalization cables and signal cables.

If the devices of the control system are connected by shielded signal cables that are earthed on both sides, the impedance must be 10% of the shielding impedance.

4.2 Requirements

The Gateway was designed for use in a control cabinet.

- ✓ The protection class of the control cabinet must be equivalent to at least IP54.
- ✓ For installation in the control cabinet you need a DIN rail 35 x 7.5 mm (EN50022).
  - ◦ Install the DIN rail horizontally in the control cabinet according to the manufacturers' specifications. When doing so, make sure that the Gateway is at a sufficient distance from other devices.

NOTICE

Your gateway could be damaged if temperatures are too high.

- ➔ Make sure that the ambient temperature in the control cabinet is less than 60 °C.
- ➔ Keep the ventilation slots unobstructed. These must not be covered by cables etc.
- ➔ Maintain sufficient distance from other devices.

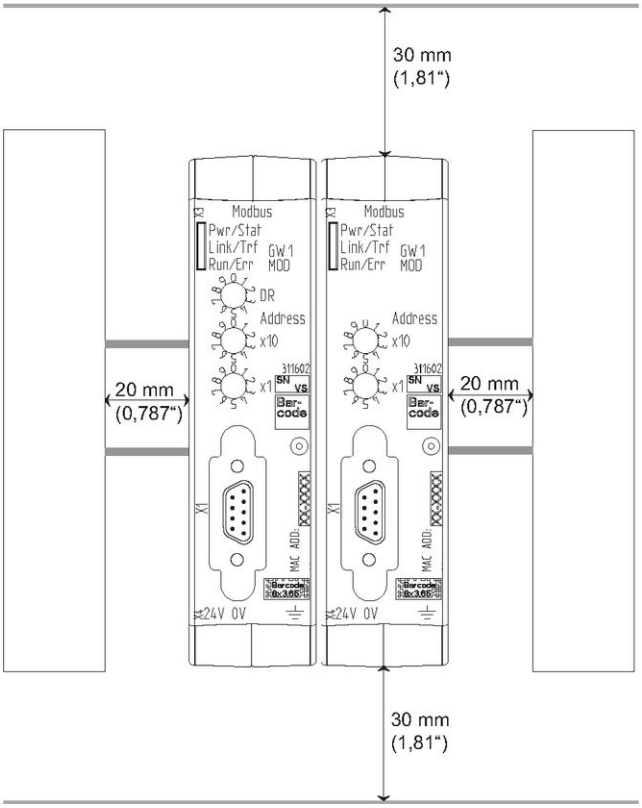

Illustration 5: Distances for installation

- ◦ Connect each gateway component individually to functional earth. When doing so, make sure that the power supplies of both gateway components have the same ground.

⇨ Your control cabinet now meets all requirements for installing the gateway.

4.3 Connecting Gateway Components

In order to attain a fully functional gateway, you have to interconnect both gateway components.

- Connect an interconnect port to each gateway component using the plug-in jumper provided.

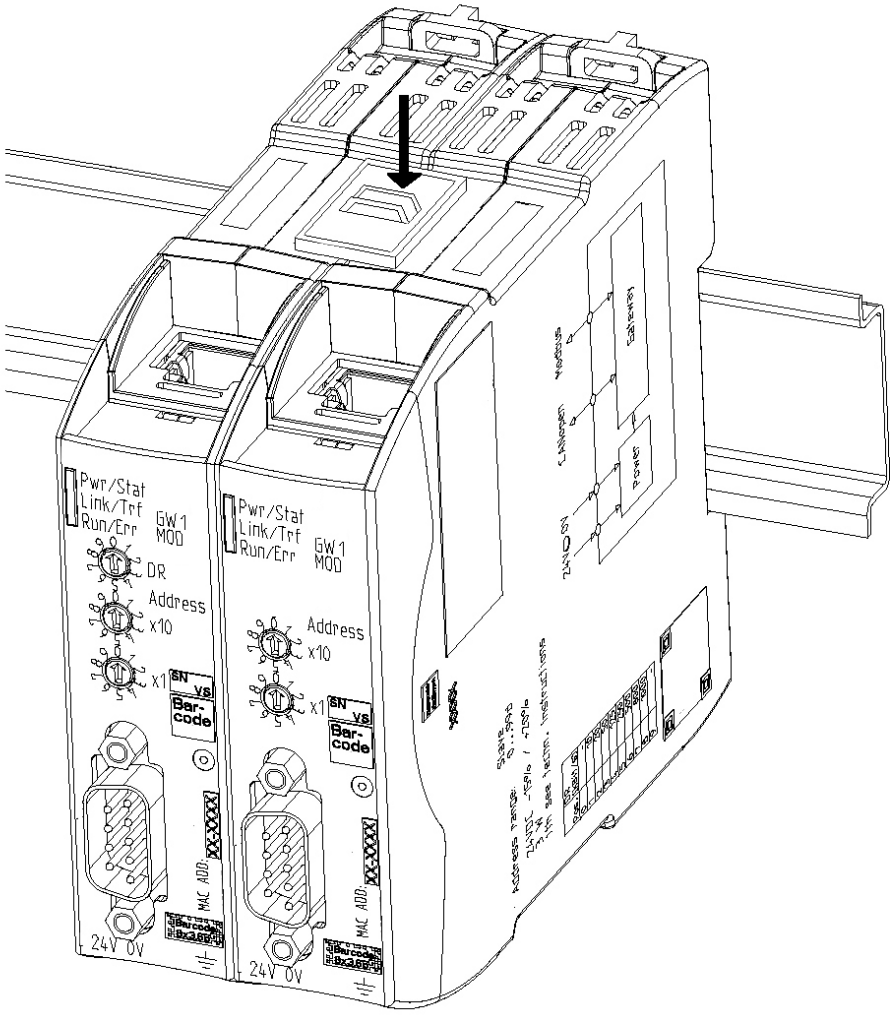

Illustration 6: Connecting gateway components

⇨ You can now install the gateway in the control cabinet.

NOTICE

Only ever interconnect 2 gateway components.

If you connect additional components, severe defects could result on all devices.

4.4 Installing a Gateway in the Control Cabinet

- Hold the raster element of the gateway on the DIN rail.
- Press down the locking elements towards the gateway.
- Make sure that the gateway is firmly attached to the DIN rail.

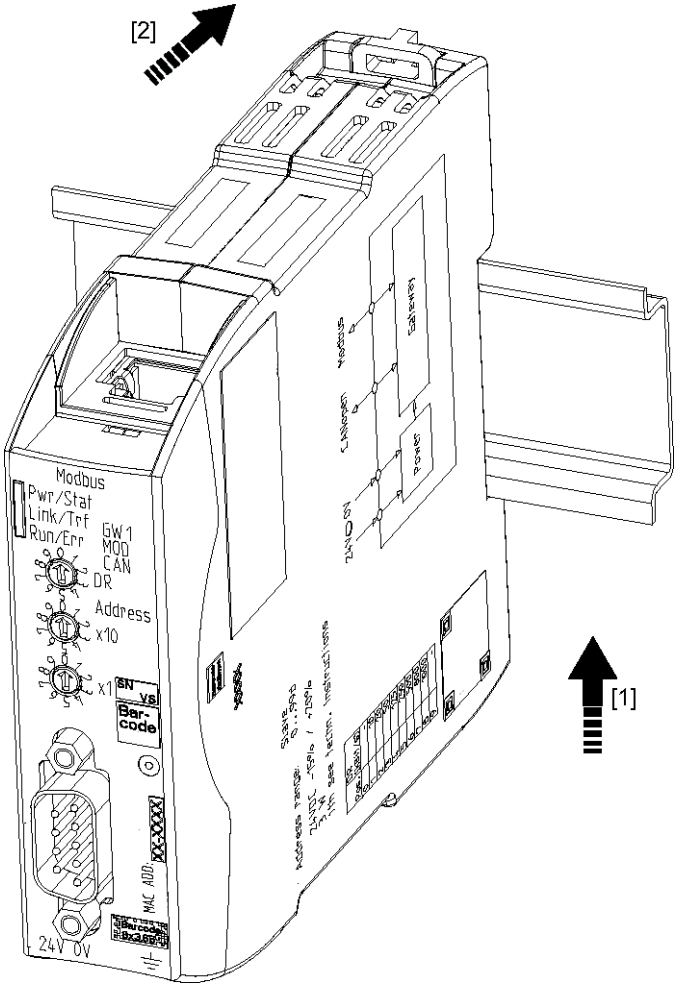

4.5 Connecting a Power Supply

To connect the gateway component to the power supply, you need a spring-loaded terminal (e.g. Metz-Connect SP995xxVBNC).

You have to connect each gateway component separately to a power supply. Never interconnect functional earth and GND, otherwise the galvanic isolation between gateway GND and fieldbus ground will be removed. Instead, connect the functional earth with low impedance to the potential equalization. You can then dispense with this connection if the shield of the fieldbus cable is connected to the potential equalization with lower impedance when entering the control cabinet.

NOTICE

Connect each of the two gateway components to its own power supply

➔Ensure in particular that no potential differences occur between the GND pins (2).

Pin assignment:

Pin	Assignment
1	24 V for module supply
2	GND
3	Do not connect!
4	Functional earth

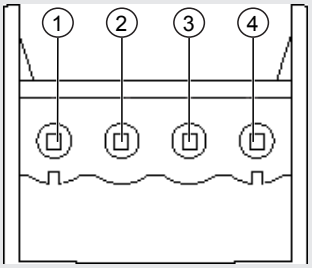

NOTICE

Do not connect GND to PE

This connection could cause unintended malfunctions.

4.6 Connecting a Gateway to the Fieldbus

To connect the gateway component to EtherNet/IP, you need Two RJ45 connectors.

The pin assignment complies with the Ethernet standard.

5 Configuration

5.1 Supported Size of the Process Data

The gateway component for EtherNet/IP supports process data of a length up to 480 bytes.

Type	Direction	Assembly Instance	Size
Exclusive Owner	Output (master -> slave)	100	up to 480 bytes
	Input (slave -> master)	150	up to 480 bytes
Input Only	Output (master -> slave)	254	0 bytes
	Input (slave -> master)	150	up to 480 bytes
Listen Only	Output (master -> slave)	255	0 bytes
	Input (slave -> master)	150	up to 480 bytes

NOTICE

Bear in mind that the maximum length of the process data is always determined by the fieldbus with the shorter data length.

Example:

Ethernet/IP supports 480 bytes per direction.

PROFIBUS supports 244 bytes per direction.

In conjunction with Ethernet/IP / PROFIBUS this means that 244 bytes are transmitted and updated cyclically.

5.2 Address Assignment

Setting IP Address

With the 8-pin address switch you can set the IP address of the Gateways.

You can set values in binary format between 0-255.

Assigning IP Address manually:

- Set any address between 1-254
  - ⇨ The gateway component uses the address 192.168.1.X with the net mask 255.255.255.0 and gateway 192.168.1.1
- Open the website **http://192.168.1.X**
- Log on:
  Logon data for the initial logon :
  User: Admin
  Password: 1701
- Click on the "Change Configuration" button
- Set the IP address required
- Confirm your entry by pressing the "Apply" button
- Set all address switches to "0"
- Restart the gateway component by switching this off and then on again.

⇨ The set IP address is now used.

Receiving IP Address from the DHCP Server

- Set the value "255" (all switches in the direction of the numbers) to activate the DHCP mode.

⇨ Assign the IP address automatically from the DHCP server.

Setting IP Address using the Master Software

- Set the value "0" (all switches to "Off")
  - ⇨ The gateway component uses the IP address that was last set using the software.
- You can change this IP address at any time via the EtherNet/IP-protocol or website.
- Restart the gateway component by switching this off and then on again.

⇨ The set IP address is now used.

5.3 Ethernet/IP Configuration

Standard Objects

The following objects are available to you for addressing the process data:

- Identity Object, Class Code: 01 Hex
- Message Router, Class Code: 02 Hex
- Assembly Object, Class Code: 04 Hex
- Connection Manager Object, Class Code: 06 Hex
- TCP/IP Interface Object, Class Code: F5 Hex
- Ethernet Link Object, Class Code: F6 hex
- Device Level Ring, Class Code: 47 Hex
- Quality of Service, Class Code: 48 Hex

These objects comply with the ODVA standard. You can find further information in the specifications for EtherNet/IP. You can find details about the implemented attributes from the EDS file provided.

Device Specific Objects

The following objects are device specific. You can use these to access the input and output data acyclically.

- Fieldbus Input Data, Class Code: A0 Hex
- Fieldbus Output Data, Class Code: A1 Hex

Fieldbus Input Data, Class Code: A0 hex

You can use this object to read data that was sent from the gateway component to the EtherNet/IP-Master. This data originates from the Master of the other gateway components.

Fieldbus Output Data, Class Code: A1 hex

You can use this object to write data that was sent from the EtherNet/IP-Master to the gateway component. This data is copied to the input data area of the other gateway component. The Master of the other gateway component can read this data there.

5.4 Configuration of Modbus TCP

You can also use these gateway components as a protocol converter for Modbus TCP.

Functions

The following Modbus functions are implemented:

Function code	Description
0x01	read coils
0x02	read discrete inputs
0x05	write single coil
0x0f	write multiple coils
0x03	read holding registers
0x04	read input registers
0x06	write single register
0x10	write multiple registers
0x16	mask write register
0x17	read/write multiple registers

Register

The following registers are implemented in the gateway component:

Address area	Function		Access
1-240	Input register, receives values of the partner gateway component.		Read only
1025-1264	Input register, sends values to the partner gateway component.		Read/write
40001-40240	Input register, compatible with Siemens controllers		Read only
30001-30240	Output register, compatible with Siemens controllers		Read/write
4097	Status of the partner gateway component		Read only
	0x01	Hardware is initialized and checked	
	0x02	Connection to the partner gateway component is checked	
	0x03	The opposite side is detected	
	0x04	Interface to the partner gateway component functions.	

Address area	Function		Access
4098	Status of the other fieldbus		Read only
	0x00	Fieldbus not connected. Check all connections	
	0x01	Fieldbus connected, no data communication. Check whether an IP address is set	
	0x02	Gateway component configured, no data communication	
	0x03	Cyclical data exchange	

Input Register

Siemens controllers use 2 predefined address areas. Therefore, the input and output registers can each be accessed via 2 addresses, one KUNBUS address and one Siemens address. Both addresses address the same memory cell, however. No separate address areas is defined for the input register. Read the holding register with function code 0x04.

Register area for bit by bit access (coils)

You can also access the input and output data area bit by bit via coils. The same memory is addressed with the coils as with the registers.

Example: Coils 1-16 correspond to the bits in register 1,

Coils 17-32 correspond to the bits in register 2.

Address area	Use	Access	Meaning
1 - 3840	Input Bits	Read only	Values that the other gateway component supplies.
16385 - 20224	Output Bits	Read/write	Values that are supplied to the other gateway component

Discrete Inputs

No separate address area is defined for discrete inputs. Read the coils with function code 0x02.

6 Technical Data

6.1 Technical Data

Dimensions	
Width	22.5 mm
Height	96 mm
Depth	110.4 mm
Weight	90 g

Electrical data	
Power supply	24 V DC
Power consumption during operation (cyclical data exchange)	100 mA
Status display	LED

Environmental conditions	
Ambient temperature	0 – 60 °C
Storage temperature	- 25 – 60 °C
Humidity	93 % (at 40 °C)
Condensing	Not allowed
Protection class	
Control cabinet	IP54
Housing	IP20
Terminal area	IP20

Assembly data	
DIN rail	35 x 7.5 mm
Height	96 mm
Depth	110.4 mm

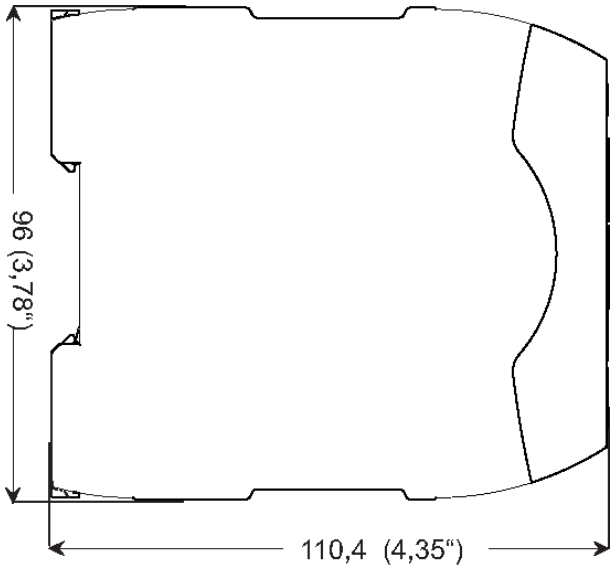

Illustration 7: Side dimensions

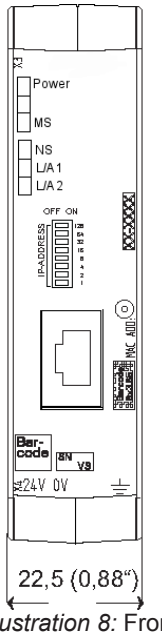

Illustration 8: Front dimensions