efector100

IW5051

IW-3005-BPKG

Inductive sensors

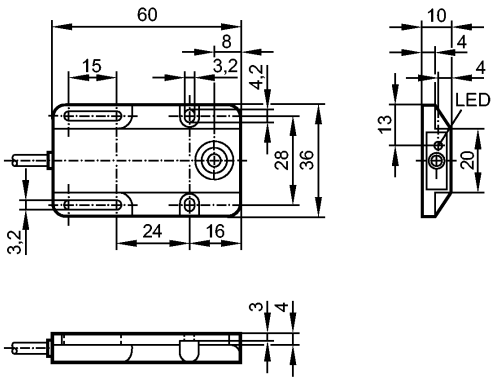

Made in Germany

CE

Product characteristics		
Inductive sensor		
Rectangular, plastics		
Cable		
Sensing range 5 mm; [f] flush mountable		
Electrical data		
Electrical design		DC PNP
Operating voltage	[V]	10...36 DC
Current consumption	[mA]	< 15 (24 V)
Protection class		II
Reverse polarity protection		yes
Outputs		
Output function		normally open
Voltage drop	[V]	< 2.5
Current rating	[mA]	250
Short-circuit protection		pulsed
Overload protection		yes
Switching frequency	[Hz]	400
Range		
Sensing range	[mm]	5
Real sensing range (Sr)	[mm]	5 ± 10 %
Operating distance	[mm]	0...4.05
Accuracy / deviations		
Correction factors		mild steel = 1 / stainless steel approx. 0.7 / brass approx. 0.4 / Al approx. 0.3 / Cu approx. 0.2
Hysteresis	[% of Sr]	1...15
Switch-point drift	[% of Sr]	-10...10
Environment		
Ambient temperature	[°C]	-25...80
Protection		IP 67
Tests / approvals		
EMC		EN 60947-5-2
MTTF	[Years]	1896

efector100

IW5051

IW-3005-BPKG

Inductive sensors

Mechanical data		
Mounting		flush mountable
Housing materials		PBT
Weight	[kg]	0.06
Displays / operating elements		
Output status indication	LED	yellow
Electrical connection		
Connection		PVC cable / 2 m; 3 x 0.14 mm²

Wiring

Core colours

BN brown
BU blue
BK black

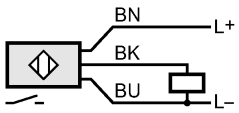

Remarks		
Pack quantity	[piece]	1