TL50 Tower Light

Features

Multi-Color General-Purpose or Audible Indicators



- Rugged, cost-effective, and easy-to-install multi-segment indicators
- Illuminated segments provide easy-to-see operator guidance and indication of equipment status
- Up to 7 stacked colors available
- Available in black or light gray housing
- Audible models available with standard, sealed, or omni-directional audible element
- Compact devices are completely self-contained, no controller needed
- Models with 1 to 5 segments, 18 V DC to 30 V DC or 24 V AC operation
- Models with 6 to 7 segments, 12 V DC to 30 V DC or 24 V AC operation
- No assembly required

Non-Audible Models

The most common models are shown. Some models are no longer available for order, but are still covered by the information in this document. Contact Banner Engineering for details or search for a desired model number at www.bannerengineering.com.

Model[1]	# of LED Colors	LED Colors[2]	Connection[3]	Inputs
TL50RQ	1	Red	Integral 4-pin M12 male quick-disconnect connector	Bimodal (NPN or PNP)
TL50GRQ	2	Green, Red		
TL50GYRQ	3	Green, Yellow, Red		
TL50BGYRQ	4	Blue, Green, Yellow, Red	Integral 5-pin M12 male quick-disconnect connector	
TL50WBGYRQ	5	White, Blue, Green, Yellow, Red	Integral 8-pin M12 male quick-disconnect connector	

Audible Models

The most common models are shown. Some models are no longer available for order, but are still covered by the information in this document. Contact Banner Engineering for details or search for a desired model number at www.bannerengineering.com.

Standard Audible Models

Model[1]	# of LED Colors	LED Colors[2]	Connection[3]	Inputs
TL50RAQ	1	Red	Integral 4-pin M12 male quick-disconnect connector	Bimodal (NPN or PNP)
TL50GRAQ	2	Green, Red		
TL50GYRAQ	3	Green, Yellow, Red	Integral 5-pin M12 male quick-disconnect connector	
TL50BGYRAQ	4	Blue, Green, Yellow, Red	Integral 8-pin M12 male quick-disconnect connector	
TL50WBGYRAQ	5	White, Blue, Green, Yellow, Red		

Sealed Audible Models

Model[1] Continuous	# of LED Colors	LED Colors[2]	Connection[3]	Inputs
TL50RALSQ	1	Red	Integral 4-pin M12 male quick-disconnect connector	Bimodal (NPN or PNP)
TL50GRALSQ	2	Green, Red		
TL50GYRALSQ	3	Green, Yellow, Red	Integral 5-pin M12 male quick-disconnect connector	
TL50BGYRALSQ	4	Blue, Green, Yellow, Red	Integral 8-pin M12 male quick-disconnect connector	

Continued on page 2

(1) Models with black housing are listed. For gray housing, add the suffix "C" at the end of the cabled model number or before the "Q" in quick-disconnect connector model numbers. For example, TL50RACQ.
(2) The first color listed is the bottom color, going up in successive order.
(3)

- To order the 150 mm (6 in) PVC cable model with an M12 quick-disconnect connector, replace the suffix "Q" with "QP" in the model number. For example, TL50GRAQP.
- To order the 2 m (6.5 ft) PVC cable model, omit the suffix "Q" in the model number. For example, TL50RA.
- Models with a quick-disconnect connector require a mating cordset.

© Banner Engineering Corp. All rights reserved.
www.bannerengineering.com
142406
p/n: 142406 Rev. S

Continued from page 1

Model[1] Continuous	# of LED Colors	LED Colors[2]	Connection[3]	Inputs
TL50WBGYRALSQ	5	White, Blue, Green, Yellow, Red		

Omni-Directional[4] Sealed Audible Models

Model[1] Continuous	# of LED Colors	LED Colors[2]	Connection[3]	Inputs
TL50RAOSQ	1	Red	Integral 4-pin M12 male quick-disconnect connector	Bimodal (NPN or PNP)
TL50GRAOSQ	2	Green, Red		
TL50GYRAOSQ	3	Green, Yellow, Red	Integral 5-pin M12 male quick-disconnect connector	
TL50BGYRAOSQ	4	Blue, Green, Yellow, Red	Integral 8-pin M12 male quick-disconnect connector	
TL50WBGYRAOSQ	5	White, Blue, Green, Yellow, Red		

Omni-Directional[4] Sealed Audible Model with Intensity Adjustment

Models[1] Continuous	# of LED Colors	LED Colors[2]	Connection[3]	Inputs
TL50RAOSIQ	1	Red	Integral 4-pin M12 male quick-disconnect connector	Bimodal (NPN or PNP)
TL50GRAOSIQ	2	Green, Red		
TL50GYRAOSIQ	3	Green, Yellow, Red	Integral 5-pin M12 male quick-disconnect connector	
TL50BGYRAOSIQ	4	Blue, Green, Yellow, Red	Integral 8-pin M12 male quick-disconnect connector	
TL50WBGYRAOSIQ	5	White, Blue, Green, Yellow, Red		

Wiring Diagram — 4-Pin Models with 1 to 3 Segments

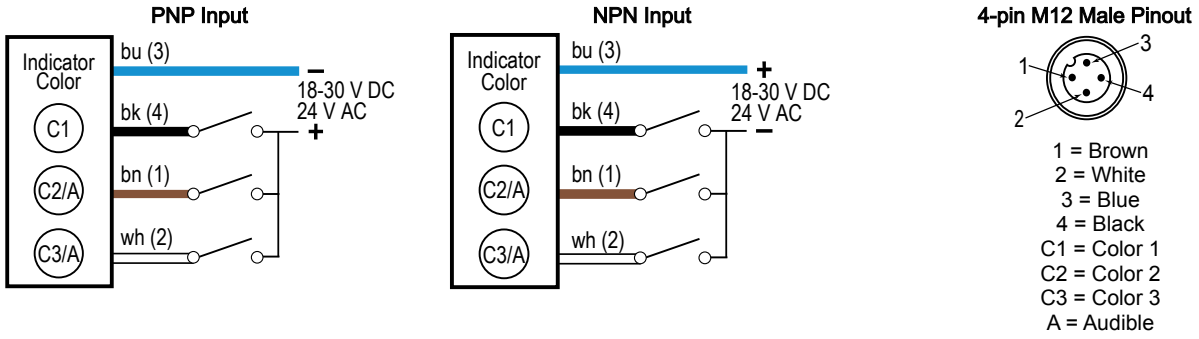

Pins 1 and 2 can activate the corresponding color or the audible function, if available.

Wiring Diagram — 5-Pin Models with 4 Segments

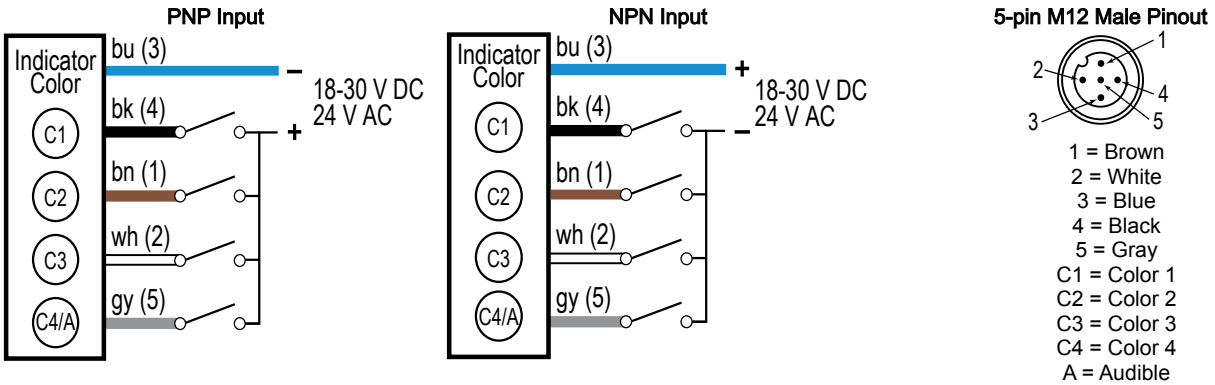

Pin 5 can activate the corresponding color or the audible function, if available.

[4] *Sound exits at 45°.*

© Banner Engineering Corp. All rights reserved.
www.bannerengineering.com

Wiring Diagram — 8-Pin Models with 5 Segments

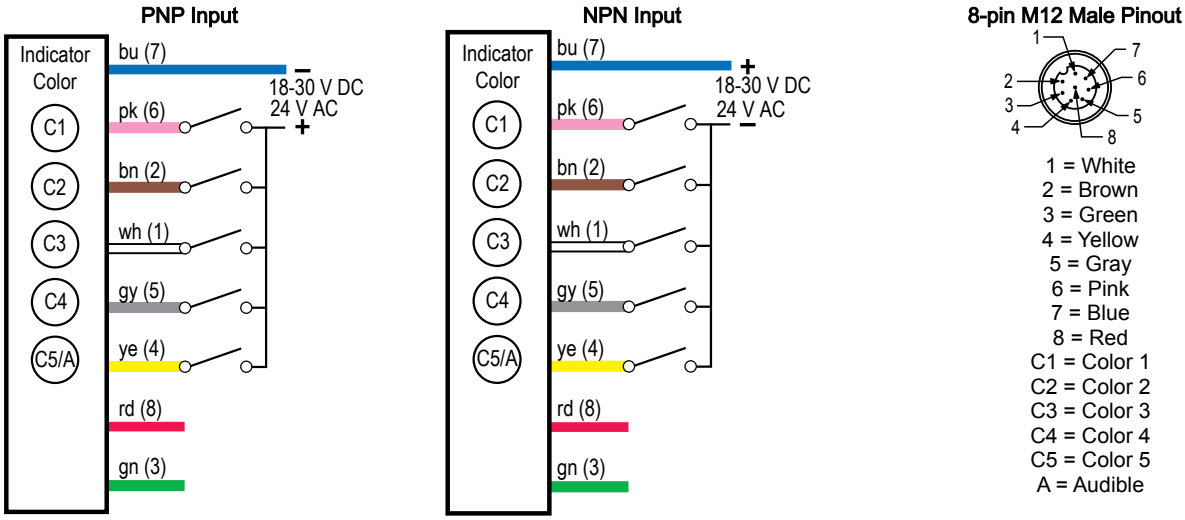

Pin 4 can activate the corresponding color or the audible function, if available. Pins 3 and 8 are not used.

Wiring Diagram — 8-Pin Models with 6 to 7 Segments

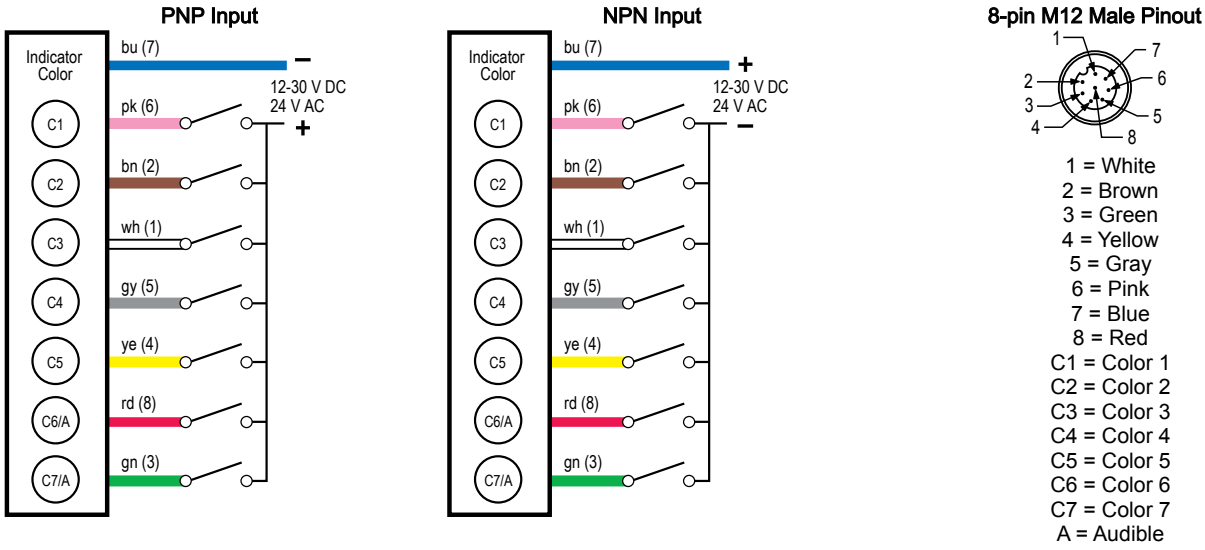

Pins 3 and 8 can activate the corresponding color or the audible function, if available.

Specifications

NOTE: Some models are no longer available for order, however, the following specifications still apply.

Supply Voltage and Current

Models with 1 to 5 segments: 18 V DC to 30 V DC; or 24 V AC (± 3 V) at 50 Hz to 60 Hz (both lights and audible alarms are counted as segments)

Indicators—maximum current per LED color: 45 mA at 18 V DC to 30 V DC

Models with 6 to 7 segments: 12 V DC to 30 V DC or 24 V AC (± 3 V) at 50 Hz to 60 Hz (both lights and audible alarms are counted as segments)

Indicators—maximum current per LED color:

- 135 mA at 12 V DC
- 45 mA at 30 V DC
- 60 mA at 24 V AC

Standard Audible Alarm: 25 mA maximum current

Sealed Audible Alarm: 35 mA maximum current

Omni-Directional Sealed Audible Alarm: 45 mA maximum current

© Banner Engineering Corp. All rights reserved.
www.bannerengineering.com

Audible Alarm

Standard Audible Alarm: 2.7 kHz ± 500 Hz oscillation frequency; maximum intensity 92 dB at 1 m (3.3 ft) (typical)

Sealed Audible Alarm: 2.9 kHz ± 250 Hz oscillation frequency; maximum intensity 94 dB at 1 m (3.3 ft) (typical)

Omni-Directional Sealed Audible Alarm: 2.1 kHz ± 250 Hz oscillation frequency; maximum intensity 99 dB at 1 m (3.3 ft) (typical)

Omni-Directional Sealed Audible Alarm with Intensity Adjustment: 2.1 kHz ± 250 Hz oscillation frequency; maximum intensity 95 dB at 1 m (3.3 ft) (typical)

Typical Reduction in Sound Intensity with Audible Adjustment (maximum to minimum)

- **Standard Audible:** 30 dB
- **Sealed Audible:** 20 dB
- **Omni-Directional Sealed Audible:** 12 dB

Audible Adjustment

Standard Audible Alarm: Unscrew the cover (up to 1.5 turns maximum) to adjust the audible intensity. (Do not exceed 1.5 turns or the cover may detach during operation.) For maximum intensity, rotate the center plug 180° counterclockwise to remove it.

Sealed Audible Alarm and Omni-Directional Sealed Audible Alarm with Intensity Adjustment: Rotate the front cover until the desired intensity is reached.

Omni-Directional Sealed Audible Alarm: No adjustment.

Supply Protection Circuitry

Protected against transient voltages

Input Response Time

Indicator On/Off: 10 milliseconds maximum

Connections

Integral 4-pin, 5-pin, or 8-pin M12 male quick-disconnect connector, 150 mm (6 in) PVC-jacketed cable with an M12 quick-disconnect connector, or 2 m (6.5 ft) integral PVC-jacketed cable, depending on model

Models with a quick-disconnect connector require a mating cordset

Construction

Bases and Covers: ABS

Light Segment: Polycarbonate

Vibration and Mechanical Shock

Meets IEC 60068-2-6 requirements (Vibration: 10 Hz to 55 Hz, 1.0 mm amplitude, 5 minutes sweep, 30 minutes dwell)

Meets IEC 60068-2-27 requirements (Shock: 30G 11 ms duration, half sine wave)

Operating Conditions

Non-Audible: –40 °C to +50 °C (–40 °F to +122 °F)

Standard and Sealed Audible: –20 °C to +50 °C (–4 °F to +122 °F)

95% at +50 °C maximum relative humidity (non-condensing)

Environmental Rating

UL Type 4X Indoor and UL Type 13

Non-Audible and Sealed Audible: IP67

Standard Audible: IP50

Indicators

LEDs are independently selected; 1 to 7 colors depending on model

Required Overcurrent Protection

WARNING: Electrical connections must be made by qualified personnel in accordance with local and national electrical codes and regulations.

Overcurrent protection is required to be provided by end product application per the supplied table.

Overcurrent protection may be provided with external fusing or via Current Limiting, Class 2 Power Supply.

Supply wiring leads < 24 AWG shall not be spliced.

For additional product support, go to www.bannerengineering.com.

Supply Wiring (AWG)	Required Overcurrent Protection (A)	Supply Wiring (AWG)	Required Overcurrent Protection (A)
20	5.0	26	1.0
22	3.0	28	0.8
24	2.0	30	0.5

Certifications

Banner Engineering BV
Park Lane, Culliganlaan 2F bus 3
1831 Diegem, BELGIUM

Indicator Characteristics

Color (Model Code)	Dominant Wavelength (nm) or Color Temperature (CCT)	Color Coordinates[5]		Lumen Output (Typical at 25 °C)
		x	y	
Green (G)	528 nm	–	–	23
Red (R)	625 nm	–	–	7.5
Yellow (Y)	590 nm	–	–	5
Blue (B)	470 nm	–	–	4
Orange (O)	608 nm	–	–	15.5
White (W)	6000 K	–	–	21
Turquoise (T)	–	0.19	0.37	5.5
Violet (V)	–	0.2	0.08	2.5
Magenta (M)	–	0.35	0.15	3
Sky Blue (S)	–	0.19	0.26	12

[5] Refer to CIE 1931 chromaticity diagram or color chart, to show equivalent color with indicated color coordinates.

© Banner Engineering Corp. All rights reserved.
www.bannerengineering.com

Dimensions

All measurements are listed in millimeters [inches], unless noted otherwise. The measurements provided are subject to change.

Dimensions	# of Colors	Tower Height (H)			
		Non-Audible	Standard Audible[6]	Sealed Audible	Omni-Directional Sealed Audible
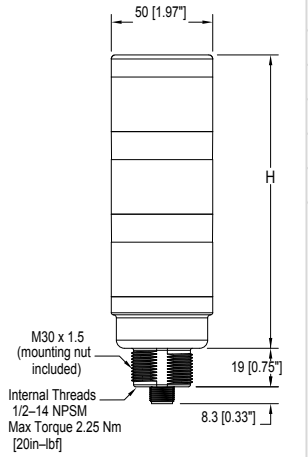	1	61.2 mm (2.4 in)	92 mm (3.6 in)	115.1 mm (4.5 in)	129.1 mm (5.1 in)
	2	101.9 mm (4 in)	132.7 mm (5.2 in)	155.8 mm (6.1 in)	169.8 mm (6.7 in)
	3	142.6 mm (5.6 in)	173.4 mm (6.8 in)	196.5 mm (7.7 in)	210.5 mm (8.3 in)
	4	183.3 mm (7.2 in)	214.1 mm (8.4 in)	237.2 mm (9.3 in)	251.2 mm (9.9 in)
	5	224 mm (8.8 in)	254.8 mm (10 in)	277.9 mm (10.9 in)	291.1 mm (11.5 in)
	6	264.7 mm (10.4 in)	298.5 mm (11.8 in)	318.6 mm (12.5 in)	332.6 mm (13.1 in)
	7	305.4 mm (12 in)	–	–	–

Accessories

Cordsets - SHARED - TL50

4-Pin Single-Ended M12 Female Cordsets

Model	Length	Style	Dimensions	Pinout (Female)	
MQDC-403	1 m (3.28 ft)	Straight	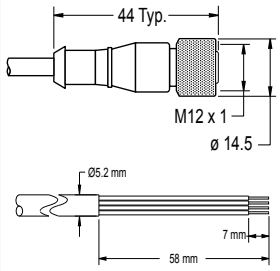	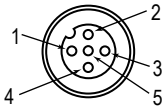	1 = Brown 2 = White 3 = Blue 4 = Black 5 = Not used
MQDC-406	2 m (6.56 ft)				
MQDC-410	3 m (9.8 ft)				
MQDC-415	5 m (16.4 ft)				
MQDC-430	9 m (29.5 ft)				
MQDC-450	15 m (49.2 ft)				
MQDC-460	18.3 m (60 ft)				
MQDC-470	21 m (68.9 ft)				
MQDC-4100	30 m (98.43 ft)				

5-Pin Single-Ended M12 Female Cordsets

Model	Length	Style	Dimensions	Pinout (Female)
MQDC1-501.5	0.5 m (1.5 ft)	Straight	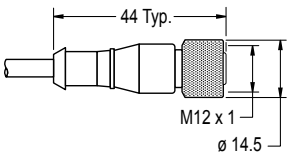	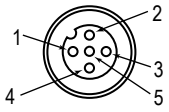 1 = Brown 2 = White 3 = Blue 4 = Black 5 = Gray
MQDC1-503	0.9 m (2.9 ft)			
MQDC1-506	2 m (6.5 ft)			
MQDC1-515	5 m (16.4 ft)			
MQDC1-530	9 m (29.5 ft)			
MQDC1-560	18 m (59 ft)			
MQDC1-5100	31 m (101.7 ft)			

Continued on page 6

[6] Tower height (H) with top unscrewed approximately 3.5 mm (0.18 in) to allow sound to escape.

© Banner Engineering Corp. All rights reserved.
www.bannerengineering.com

Continued from page 5

5-Pin Single-Ended M12 Female Cordsets				
Model	**Length**	**Style**	**Dimensions**	**Pinout (Female)**
MQDC1-506RA	2 m (6.5 ft)	Right-Angle	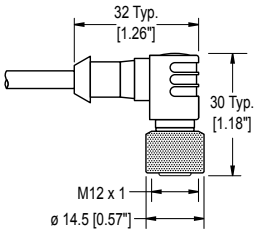	
MQDC1-515RA	5 m (16.4 ft)			
MQDC1-530RA	9 m (29.5 ft)			
MQDC1-560RA	19 m (62.3 ft)			

8-Pin Single-Ended M12 Female Open-Shielded Cordsets				
Model	**Length**	**Style**	**Dimensions**	**Pinout (Female)**
MQDC2S-806	2.04 m (6.7 ft)	Straight	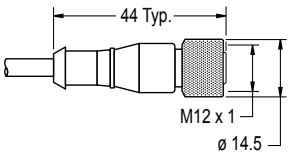	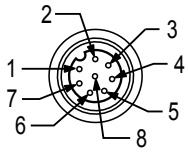 1 = White 2 = Brown 3 = Green 4 = Yellow 5 = Gray 6 = Pink 7 = Blue 8 = Red
MQDC2S-815	5.04 m (16.54 ft)			
MQDC2S-830	10.04 m (32.95 ft)			
MQDC2S-850	16 m (52.49 ft)			
MQDC2S-806RA	2 m (6.56 ft)	Right-Angle	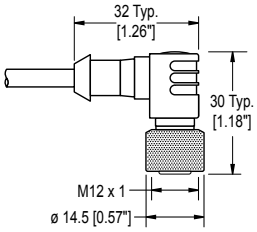	
MQDC2S-815RA	5 m (16.4 ft)			
MQDC2S-830RA	10 m (32.81 ft)			
MQDC2S-850RA	16 m (52.49 ft)			

Mounting Brackets

All measurements are listed in millimeters [inches], unless noted otherwise. The measurements provided are subject to change.

SMB30A

- Right-angle bracket with curved slot for versatile orientation
- Clearance for M6 (¼ in) hardware
- Mounting hole for 30 mm sensor
- 12-gauge stainless steel

Hole center spacing: A to B=40
Hole size: A=ø 6.3, B= 27.1 × 6.3, C=ø 30.5

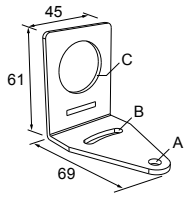

SMB30FA

- Swivel bracket with tilt and pan movement for precise adjustment
- Mounting hole for 30 mm sensor
- 12-gauge 304 stainless steel
- Easy sensor mounting to extrude rail T-slot
- Metric- and inch-size bolt available

Bolt thread: SMB30FA, A= 3/8 - 16 × 2 in; SMB30FAM10, A= M10 - 1.5 × 50
Hole size: B= ø 30.1

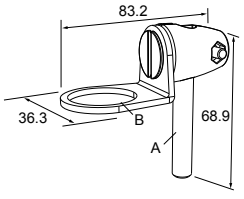

SMB30MM

- 12-gauge stainless steel bracket with curved mounting slots for versatile orientation
- Clearance for M6 (¼ in) hardware
- Mounting hole for 30 mm sensor

Hole center spacing: A = 51, A to B = 25.4
Hole size: A = 42.6 × 7, B = ø 6.4, C = ø 30.1

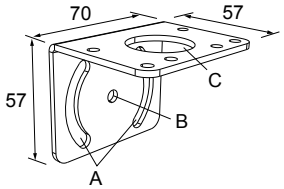

© Banner Engineering Corp. All rights reserved.
www.bannerengineering.com

SMBAMS30P

- Flat SMBAMS series bracket
- 30 mm hole for mounting sensors
- Articulation slots for 90°+ rotation
- 12-gauge 300 series stainless steel

Hole center spacing: A=26.0, A to B=13.0
Hole size: A=26.8 × 7.0, B=ø 6.5, C=ø 31.0

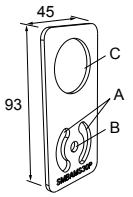

SMBAMS30RA

- Right-angle SMBAMS series bracket
- 30 mm hole for mounting sensors
- Articulation slots for 90°+ rotation
- 12-gauge (2.6 mm) cold-rolled steel

Hole center spacing: A=26.0, A to B=13.0
Hole size: A=26.8 × 7.0, B=ø 6.5, C=ø 31.0

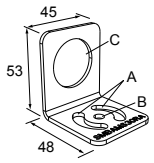

SMB30SC

- Swivel bracket with 30 mm mounting hole for sensor
- Black reinforced thermoplastic polyester
- Stainless steel mounting and swivel locking hardware included

Hole center spacing: A=ø 50.8
Hole size: A=ø 7.0, B=ø 30.0

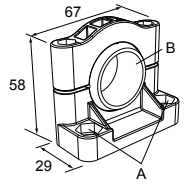

LMBE12RA35

- Direct mounting of stand-off pipe, with common bracket type
- Zinc-plated steel
- 1/2-14 NPSM nut
- Mounting distance from the wall to the center of the 1/2-14 NPSM nut is 35 mm

Hole center spacing: 20.0

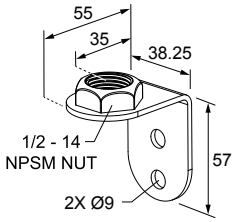

LMBE12RA45

- Direct mounting of stand-off pipe, with common bracket type
- Zinc-plated steel
- 1/2-14 NPSM nut
- Mounting distance from the wall to the center of the 1/2-14 NPSM nut is 45 mm

Hole center spacing: 35.0

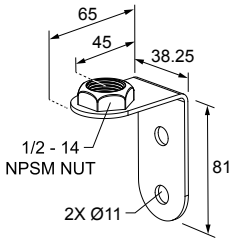

LMB Sealed Right-Angle Bracket

Model	Description	
LMB30RA - Black polycarbonate **LMB30RAC** - Gray polycarbonate	• **Direct-Mount Models** • Bracket kit with base, 30 mm adapter, set screw, fasteners, O-rings, and gaskets.	
LMBE12RA - Black polycarbonate **LMBE12RAC** - Gray polycarbonate	• **Pipe-Mount Models** • Bracket kit with base, ½-14 pipe adapter, set screw, fasteners, O-rings, and gaskets • For use with stand-off pipe (listed and sold separately)	

© Banner Engineering Corp. All rights reserved.
www.bannerengineering.com

Elevated Mount System

Model			Description	Components
SA-M30TE12 - Black Acetal			• Streamlined black acetal or white UHMW stand-off pipe adapter/cover • Connects between 30 mm light base and ½ in. NPSM/ DN15 pipe • Mounting hardware included	
SA-M30TE12C - White UHMW				
Polished 304 Stainless Steel	**Black Anodized Aluminum**	**Clear Anodized Aluminum**	• Elevated-use stand-off pipe (½ in. NPSM/DN15) • Polished 304 stainless steel, black anodized aluminum, or clear anodized aluminum surface • ½ in. NPT thread at both ends: one end screws into the internal threads of the light's base, and one end screws into the mounting base adapter/cover • Compatible with most industrial environments	
SOP-E12-150SS 150 mm (6 in) long	**SOP-E12-150A** 150 mm (6 in) long	**SOP-E12-150AC** 150 mm (6 in) long		
SOP-E12-300SS 300 mm (12 in) long	**SOP-E12-300A** 300 mm (12 in) long	**SOP-E12-300AC** 300 mm (12 in) long		
SOP-E12-900SS 900 mm (36 in) long	**SOP-E12-900A** 900 mm (36 in) long	**SOP-E12-900AC** 900 mm (36 in) long		
SA-E12M30 - Black Acetal			• Streamlined black acetal or white UHMW mounting base adapter/cover • Connects between ½ in. NPSM/DN15 pipe and 30 mm (1-3/16 in) drilled hole • Mounting hardware included	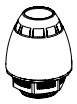
SA-E12M30C - White UHMW				

Pipe Mounting Flange

Pipe Mounting Flange			
Model	**Description**	**Construction**	
SA-F12	• Elevated-use stand-off pipes (½ in, NPSM/ DN15) • M5 mounting hardware and nitrile gasket included	Die-cast zinc base with black paint	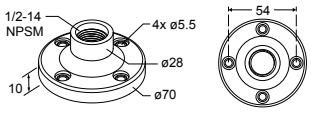
SA-F12-3	• Elevated-use stand-off pipes (½ in, NPSM/ DN15) • M4 mounting hardware and nitrile blend gasket included	Black Polycarbonate	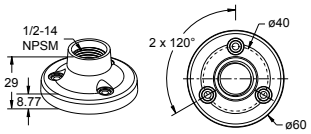

Banner Engineering Corp Limited Warranty

Banner Engineering Corp. warrants its products to be free from defects in material and workmanship for one year following the date of shipment. Banner Engineering Corp. will repair or replace, free of charge, any product of its manufacture which, at the time it is returned to the factory, is found to have been defective during the warranty period. This warranty does not cover damage or liability for misuse, abuse, or the improper application or installation of the Banner product.

THIS LIMITED WARRANTY IS EXCLUSIVE AND IN LIEU OF ALL OTHER WARRANTIES WHETHER EXPRESS OR IMPLIED (INCLUDING, WITHOUT LIMITATION, ANY WARRANTY OF MERCHANTABILITY OR FITNESS FOR A PARTICULAR PURPOSE), AND WHETHER ARISING UNDER COURSE OF PERFORMANCE, COURSE OF DEALING OR TRADE USAGE.

This Warranty is exclusive and limited to repair or, at the discretion of Banner Engineering Corp., replacement. **IN NO EVENT SHALL BANNER ENGINEERING CORP. BE LIABLE TO BUYER OR ANY OTHER PERSON OR ENTITY FOR ANY EXTRA COSTS, EXPENSES, LOSSES, LOSS OF PROFITS, OR ANY INCIDENTAL, CONSEQUENTIAL OR SPECIAL DAMAGES RESULTING FROM ANY PRODUCT DEFECT OR FROM THE USE OR INABILITY TO USE THE PRODUCT, WHETHER ARISING IN CONTRACT OR WARRANTY, STATUTE, TORT, STRICT LIABILITY, NEGLIGENCE, OR OTHERWISE.**

Banner Engineering Corp. reserves the right to change, modify or improve the design of the product without assuming any obligations or liabilities relating to any product previously manufactured by Banner Engineering Corp. Any misuse, abuse, or improper application or installation of this product or use of the product for personal protection applications when the product is identified as not intended for such purposes will void the product warranty. Any modifications to this product without prior express approval by Banner Engineering Corp will void the product warranties. All specifications published in this document are subject to change; Banner reserves the right to modify product specifications or update documentation at any time. Specifications and product information in English supersede that which is provided in any other language. For the most recent version of any documentation, refer to: www.bannerengineering.com.

For patent information, see www.bannerengineering.com/patents.

© Banner Engineering Corp. All rights reserved.
www.bannerengineering.com