**M12 male 0°/M12 female 0° shielded B-cod.Profibus**

PUR 1x2xAWG24 shielded vt UL/CSA+dragchain 3m

PROFIBUS
Male straight – female straight
M12, 4-pole – M12, 2-pole
B-coded
shielded
Plastic housings with good resistance against chemicals and oils.
The resistance to aggressive media should be individually tested for your application. Further details on request.
Further cable lengths on request.

**Link to Product**

**Illustration**

The information in this brochure has been compiled with the utmost care.
Liability for the correctness completeness and topicality of the information is restricted to gross negligence. Version: 05/21

MURR ELEKTRONIK
stay connected



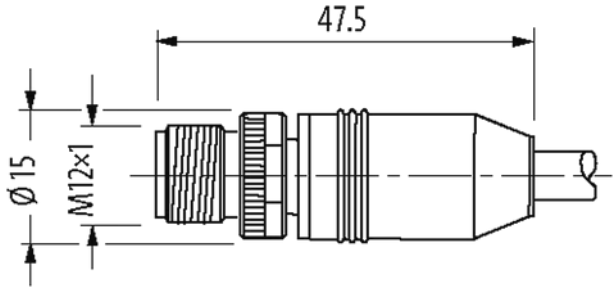


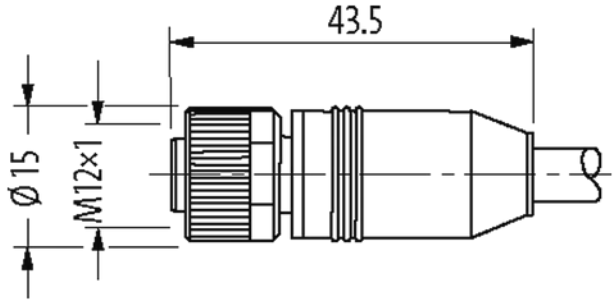


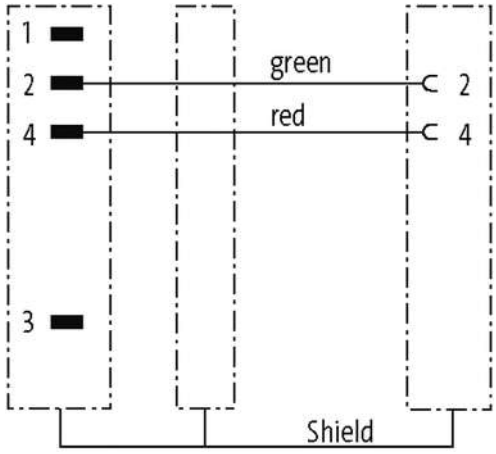


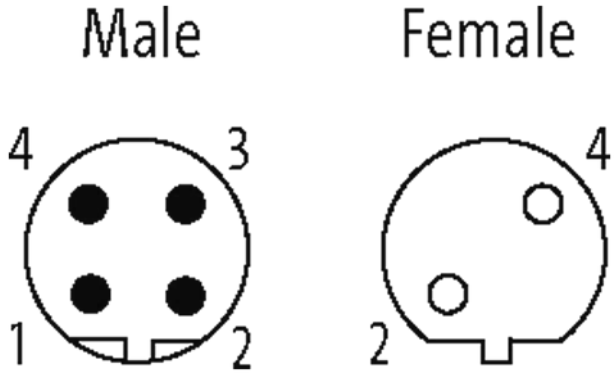


Product may differ from Image

## Approvals

The information in this brochure has been compiled with the utmost care.
Liability for the correctness completeness and topicality of the information is restricted to gross negligence. Version: 05/21

MURR ELEKTRONIK
stay connected

cCSAus

c UL us Listed *

* only for products with UL/CSA approved cable

## More Info

PROFIBUS

## Form

| | |
|---|---|
| Form | 44001 |

## Technical Data

| | |
|---|---|
| Operating voltage | max. 60 V AC/DC |
| Operating voltage (only UL listed) | max. 30 V AC/DC |
| Rated surge voltage | 1.5 kV |
| Operating current per contact | max. 4 A |
| Material group | IEC 60664-1, category I |
| Coding | B-coded |
| Locking of ports | Screw thread (M12×1 mm) recommended torque 0.6 Nm, self-securing |
| Compression gland | M12 (SW13) |
| Protection | IP65, IP66K, IP67 inserted and tightened (EN 60529) |
| Locking material | Zinc die casting, matte nickel plated |
| Material | PUR |
| suitable for corrugated tube (internal Ø) | without |

## General data

| | |
|---|---|
| Standards | DIN EN 61076-2-101 (M12) |
| Mounting method | inserted, tightened |
| Pollution Degree | 3 |
| Temperature range | -25...+85 °C, depending on cable quality |

## Cables

| | |
|---|---|
| No./diameter of wires | 1× 2× 0.25 mm² |
| Wire isolation | PE (rd, gn) |
| C-track properties | 10 Mio. |
| Jacket Color | violet |
| Material (jacket) | PUR (UL/CSA) |
| Outer Ø | 7.8 mm ±5% |
| Bend radius (moving) | 12× outer Ø |
| Temperature range (fixed) | -40...+80 °C |
| Temperature range (mobile) | -20...+60 °C |
| Cable identification | 840 |
| Approval (cable) | UL (AWM-Style 20236/1589), CSA; CE |
| Cable weight [g/m] | 82,50 |
| Material (wire) | Cu wire, bare |
| Resistor (core) | max. 78 Ω/km (20 °C) |
| Single wire Ø (core) | 0.127 mm |
| Construction (core) | 19× 0.127 mm |
| Diameter (core) | 1× 2× 0.25 mm² |
| AWG | similar to AWG 24 |
| Material (wire isolation) | PE |
| Wire-Ø incl. isolation | 2.55 mm ±5% |
| Color/numbering of wires | rd, gn |

The information in this brochure has been compiled with the utmost care.
Liability for the correctness completeness and topicality of the information is restricted to gross negligence. Version: 05/21

| | |
|---|---|
| Stranding combination | 2 wires twisted |
| Shield | yes |
| optical shield cover | min. 70% |
| Material (jacket) | PUR |
| Outer-Ø (jacket) | 7.8 mm ±5% |
| Color (jacket) | violet |
| chemical resistance | good resistance to oil, gasoline and chemicals |
| thermal resistance | flame retardant |
| Nominal voltage | 250 V |
| Temperature range (fixed) | -40...+80 °C |
| Temperature range (mobile) | -20...+60 °C |
| Bend radius (fixed) | 10× outer Ø |
| Bend radius (moving) | 12× outer Ø |
| No. of bending cycles (C-track) | max. 10 Mio. (25 °C) |
| Traversing distance (C-track) | max. 5 m (horizontal) |
| Travel speed (C-track) | max. 3 m/s |
| Acceleration (C-track) | max. 5 m/s² |

**Commercial data**

| | |
|---|---|
| country of origin | DE |
| customs tariff number | 85444290 |
| EAN | 4048879142427 |
| eClass | 27061801 |
| Packaging unit | 1 |

The information in this brochure has been compiled with the utmost care.
Liability for the correctness completeness and topicality of the information is restricted to gross negligence. Version: 05/21