E19929

Mounting adapter for capacitive sensors

MOUNTING ADAPTER M30 HDPE

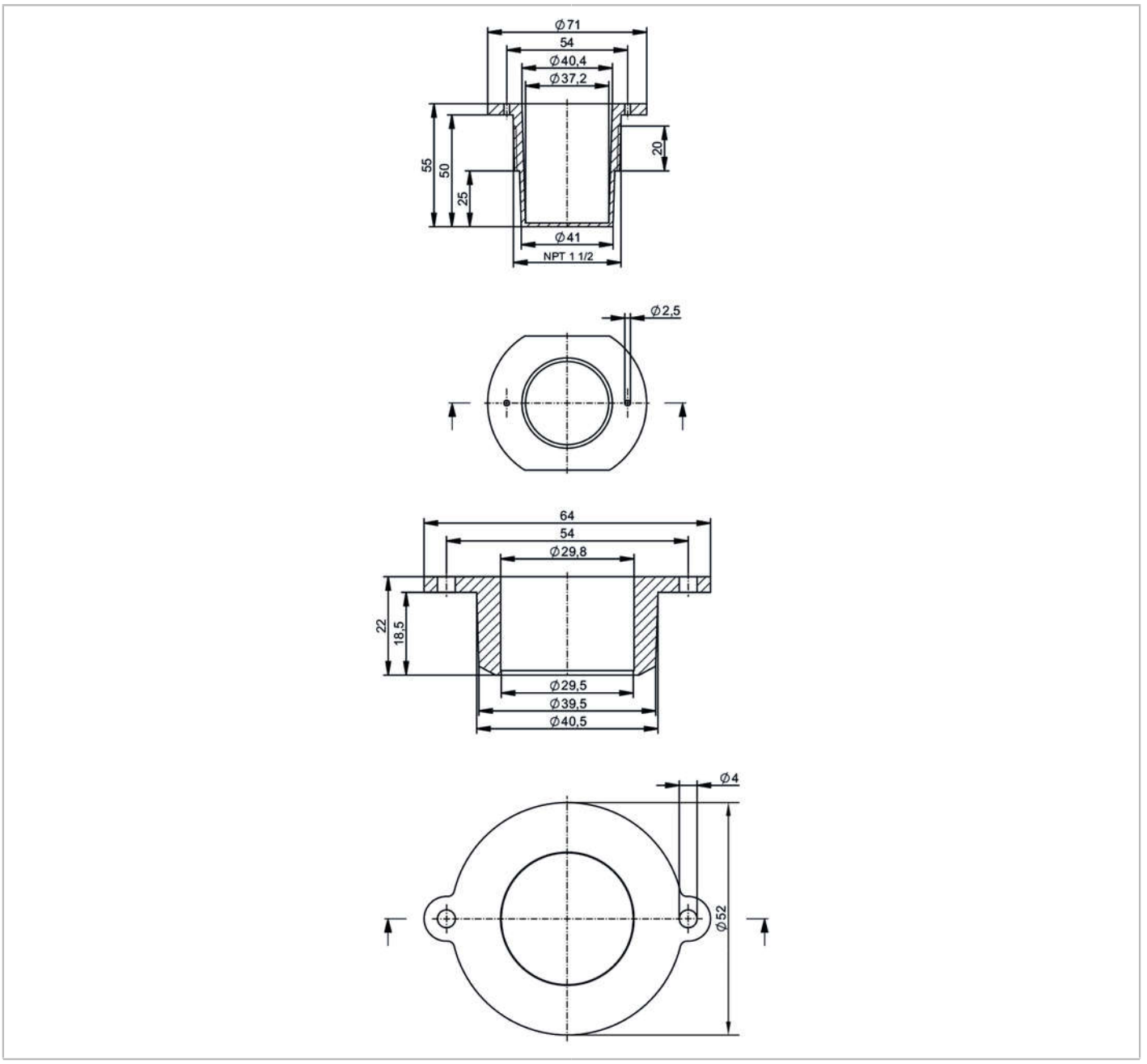

Application		
Design		for types M30
Mechanical data		
Weight	[g]	52.9
Materials		HDPE
Process connection		1 1/2" NPT
Accessories		
Items supplied		button head hexagon socket screw: 2 x M3 x 8 mm
Remarks		
Pack quantity		1 pcs.