Brand of NTN corporation

Technical data

BBE40AUU

Standard ball bushings closed



VISUAL (S)

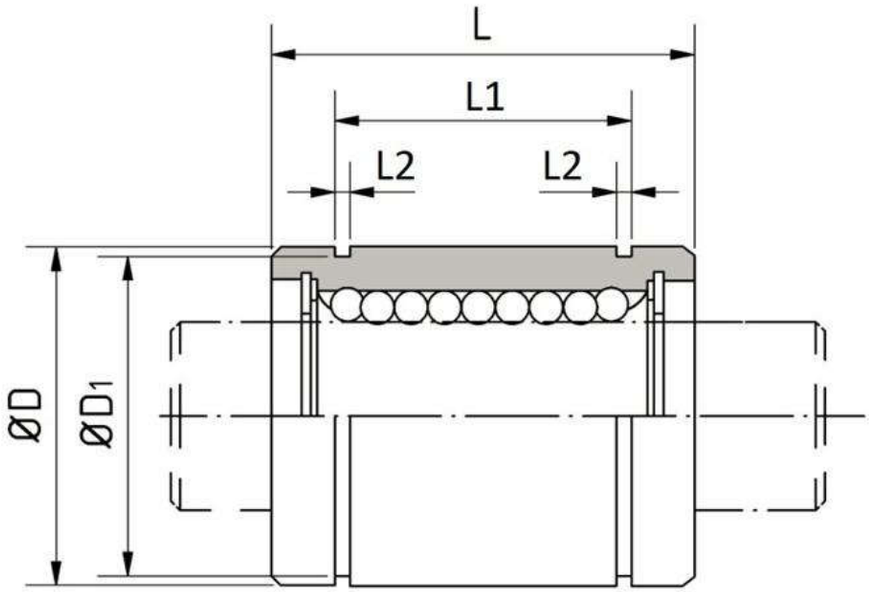

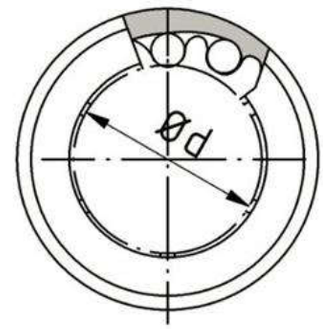

PRODUCT DEFINITION

Brand	SNR
Design type	BBE
Ball bushings category	Standard ball bushings, closed
Standard	ISO dimension
Number of seals	2
Material outer cylinder or steel segments	100Cr6
Material Cage	RSt34-2
Initial greasing	Non/No
d - Internal diameter	40 mm

BBE40AUU
Standard ball bushings closed

PRODUCT DEFINITION	
d - Internal diameter tolerance	0,013/-0,002
D - External diameter	62 mm
D - External diameter tolerance	0/-0,013
L - Length	80 mm
L - Length tolerance	0/-0,3
L1	60,6 mm
L1 tolerance	0/-0,3
D1 - Diameter	59 mm
L2	2,15 mm
Number of ball rows	6
Mass	0,77 kg

PRODUCT PERFORMANCE	
Cmin	2,357 kN
Cmax	3,017 kN
C0min	4,02 kN
C0max	5,146 kN
Tmin - Min operating temperature	-20 °C
Tmax - Max operating temperature	110 °C

ESHOPDONOTDISPLAY	
Reference	BBE40AUU
Image	BBE+BB_1.JPG, BBE+BB_3.JPG
Send to Eshop	Yes
Send to Paper Catalog	Yes

ESHOPDONOTDISPLAY	
Tracepart	Oui/Yes