IFT259

Inductive full-metal sensor

IFB3005QBPKG/AM/P/US-104

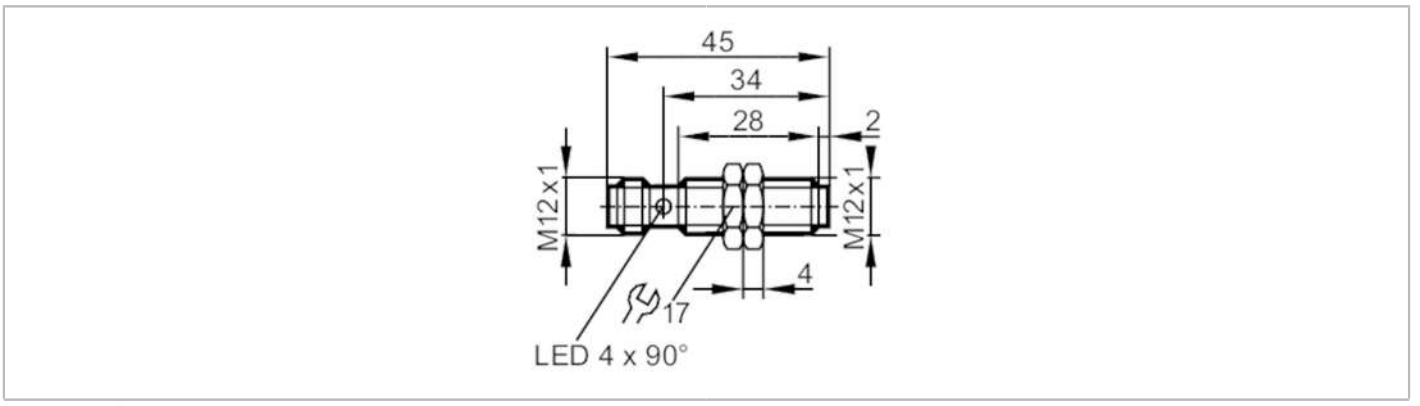

EC 1935/2004

Product characteristics		
Electrical design		PNP
Output function		normally open
Sensing range	[mm]	5
Dimensions	[mm]	M12 x 1 / L = 45
Application		
Special feature		Gold-plated contacts; Increased sensing range; Full-metal housing
Application		constant cleaning with aggressive cleaning agents; regular cleaning processes
Pressure rating	[bar]	100
Note on pressure rating		sensing face
Electrical data		
Operating voltage	[V]	10...30 DC
Current consumption	[mA]	20
Protection class		III
Reverse polarity protection		yes
Outputs		
Electrical design		PNP
Output function		normally open
Max. voltage drop switching output DC	[V]	2.5
Permanent current rating of switching output DC	[mA]	100
Switching frequency DC	[Hz]	250
Short-circuit protection		yes
Overload protection		yes
Detection zone		
Sensing range	[mm]	5
Real sensing range Sr	[mm]	5; (± 10 %)
Operating distance	[mm]	0...4.05
Increased sensing range		yes
Accuracy / deviations		
Correction factor		steel: 1 / stainless steel: 1 / brass: 0.3 / aluminium: 0.3 / copper: 0.2

IFT259

Inductive full-metal sensor

IFB3005QBPKG/AM/P/US-104

Hysteresis	[% of Sr]	3...15	
Switch point drift	[%]	-10...10	
Operating conditions			
Ambient temperature	[°C]	0...100	
Protection		IP 65; IP 66; IP 67; IP 68; IP 69K	
Tests / approvals			
EMC		EN 61000-4-2 ESD	4 kV CD / 8 kV AD
		EN 61000-4-3 HF radiated	10 V/m
		EN 61000-4-4 Burst	2 kV
		EN 61000-4-6 HF conducted	10 V
		EN 55011	class B
Impact resistance			1 J
Vibration resistance		EN 60068-2-6 Fc	20 g (10...3000 Hz) / 50 sweep cycles, 1 octave per minute, in 3 axes
Shock resistance		EN 60068-2-27 Ea	100 g 11 ms half-sine; 3 shocks each in every direction of the 3 coordinate axes
Continuous shock resistance		EN 60068-2-27	40 g 6 ms; 4000 shocks each in every direction of the 3 coordinate axes
Fast temperature change		EN 60068-2-14 Nc	TA = 0°C; TB = 100°C; t1 = 30 min; t2 = < 10 s 50 cycles
MTTF	[years]	1386	
Embedded software included		yes	
UL approval		Ta	0...70 °C
		Enclosure type	Type 1
		power supply	Unlimited Voltage
		UL Approval no.	A012
		File number UL	E174191
Mechanical data			
Weight	[g]	24.7	
Mounting		quasi flush	
Dimensions	[mm]	M12 x 1 / L = 45	
Thread designation		M12 x 1	
Materials		stainless steel (1.4404 / 316L); sensing face: stainless steel (1.4404 / 316L); LED window: PEI; lock nuts: stainless steel (1.4404 / 316L)	
Tightening torque	[Nm]	15	
Full-metal housing		yes	
Displays / operating elements			
Display		switching status	4 x LED, yellow
Accessories			
Items supplied		lock nuts: 2	
Remarks			
Pack quantity		1 pcs.	

IFT259

Inductive full-metal sensor

IFB3005QBPKG/AM/P/US-104

Electrical connection



Connection

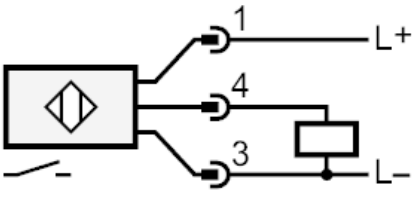

Electrical connection - plug

Connector: 1 x M12; Contacts: gold-plated

Diagrams and graphs

Installation

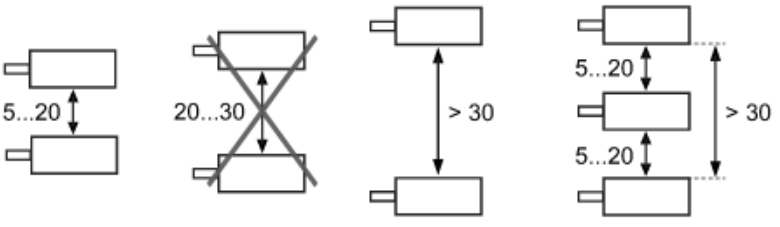

IFT259

Inductive full-metal sensor

IFB3005QBPKG/AM/P/US-104

