**MODEL: BU-P3770**

**Standard Binding Post**

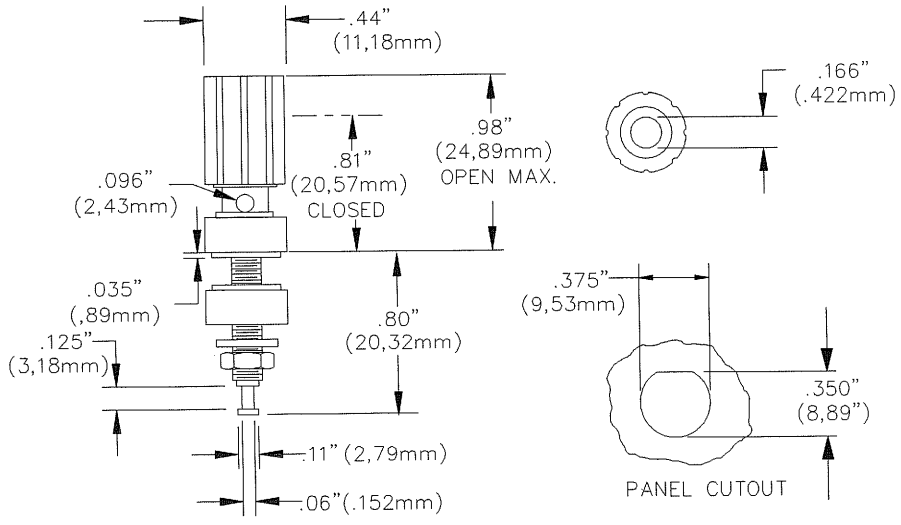


Mounts in Panels between .070" and .250" (1.77-6.35) Thick
Accepts Standard 4mm Banana plugs or bare wire or spade lugs

MATERIALS:
Body – Gold Plated Tellurium Copper
Insulator – Polycarbonate

RATING:
Current: 15 Amps
Voltage: Hands free testing to 2500VRMS Max.
Temperature: -50°C to 115°C