CATALOG

Softstarters

PSR, PSRC, PSE and PSTX



Motors use almost one third of the world’s generated electricity. So it is safe to say that reliable motor operation is crucial to our modern way of life.

Contents

04	ABB softstarters
06	Common applications for softstarters
08	Motor starting
12	Softstarters portfolio
16	Wall mounting
17	Certifications and approvals
18	PSR
28	PRSC
40	PSE
52	PSTX
72	Fieldbus communications
74	Marketing materials and tools

ABB softstarters
How we are helping the industry

A softstarter from ABB offers you several values and benefits. Whether you are a consultant, OEM, panel builder or end-user, A softstarter will add to your business value by securing motor reliability, improving installation efficiency and increasing application productivity.



SECURE MOTOR RELIABILITY

ABB softstarters help increase your motors lifetime by protecting it from electrical stress. Starting currents are easily optimized to your load, application and motor size. Over ten motor protection features are included to keep your motor safe from different load and network irregularities.

IMPROVE INSTALLATION EFFICIENCY

Reduce your installation time and panel size by having all features you need built into your softstarter. Our softstarters are easy to install thanks to their compact design and many built-in features. The built-in bypass saves energy and space while reducing heat generation. A complete motor starting solution in one unit.

INCREASE APPLICATION PRODUCTIVITY

Reduce the number of stops in your production by allowing your softstarter to do more than just starting. Our softstarters reduce the mechanical stress on your motor application, which will increase your uptime. Torque control, pump cleaning, motor brake and many other features enable you to operate your process at its full potential.



Xylem - South Africa

ABB softstarters providing efficiency to the mining industry

One of Xylems water solutions helps to prevent flooding in mines. Previous softstarters needed a lot of extra protection equipment. Xylem was looking for a simpler solution that would ensure reliability even at 3,500 meters depth. Reducing the number of components by 80 percent, shortened installation time by 60 percent. Costs cut to half has helped Xylem sell twice as many panels with softstarters as before.

Installation time reduced by 60%

Total panel cost reduced by 50%

Common applications for softstarters Pumps, fans, compressors and conveyors

A softstarter can do wonders with your operations. Packed with useful features, it reduces the wear of your equipment, improve the reliability of your processes and increase overall productivity.

01 Softstarters controlling pumps

02 Softstarters controlling fans

Pump

Eliminating water hammering with torque control

Water hammering is a common problem with pumps and typically results in wear in pipes and valves when starting and stopping the pump. The ABB softstarter feature torque control provides a soft pipe fill during start and eliminates water hammering during stop. The benefits are prolonged lifetime of the system and increased uptime.

Keep pipes and pumps clean

Many pumps risk getting clogged over time. This will cause reduced flow and increased risk of pump damage. Thanks to the feature to reverse the direction of the flow and start again with kick-start, ABB softstarters can help prevent and solve pump clogging and associated downtime.

Avoid running dry with underload protection

Damages due to pumps running dry can be avoided with the softstarter feature dry pump protection, called underload protection. It stops the motor which saves the pump from additional wear and contributes to prolonging its lifetime.

Fans

Soft starting adjusted to application

Fans normally have a high moment of inertia, which makes starting tough and current high. Using an ABB softstarter, the voltage is increased gradually during start, which reduces the current and removes the inrush peak. It is possible to adjust the settings to fit almost any starting condition, from unloaded to fully loaded.

Fast stops with motor braking

It can also take a long time to stop a fan. With the dynamic brake feature, also called flux braking, the stopping time can be reduced. This improves process safety when the load has a high moment of inertia and makes fan operation easier for the operator.

Avoid unwanted movements with stand still brake

An idle fan that is rotating backwards, due to wind or airflow from another fan, can be kept still using the stand still brake. It prevents unwanted airflow and improves the control of the system without the need for an external mechanical brake.

01



02

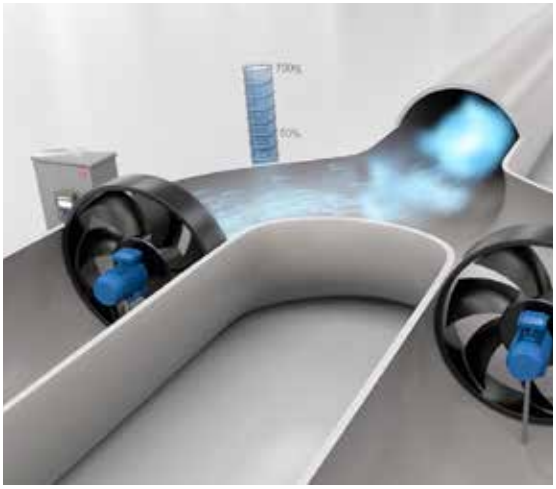

03 Softstarters controlling compressors

04 Softstarters controlling conveyor belts

Compressors

Full control of current with current limit
Many applications are sensitive to high or variable starting currents. The feature current limit makes it possible to start the motor securely even in a weaker network, improving the availability of the equipment and system. Reducing the current means reducing the stress on cables, network and motor.

Full voltage start for scroll compressors
For scroll compressors it is often necessary to start the motor in a very short time while still maintaining a low starting current. Full voltage start is a start mode that gives you almost a direct start but without the current peak.

Phase reversal protection for problem-free commissioning
A motor rotating in the wrong direction, which may occur due to connecting the phases wrongly, may cause severe damage to a compressor. Using phase reversal protection, the motor won't start in the wrong direction, avoiding costly compressor downtime and repairs.

Conveyors

Avoid overheating with overload protection
Too much material on a conveyor belt may cause overload and overheating, reducing the reliability and longevity of the motor. ABB's overload protection feature shuts down the motor in case of overload, avoiding overheating.

Increased flexibility with jog with slow speed
After stopping the belt, it may be necessary to run the motor at low speed to correctly position the belt before resuming operation. The jog with slow speed feature makes it possible to position the belt manually, in both forward and reverse direction, before re-starting the belt. This improves process efficiency and eliminates the need for a variable speed drive, a considerably more expensive solution for solving the problem.

Continuous operation with limp mode
Shorted thyristor is a possible problem for a softstarter, putting it out of operation until the component has been replaced. Using limp mode, the softstarter will continue to work with one thyristor shorted, avoiding costly unplanned stoppages.

03



04



Motor starting

Why motor starting and stopping matters

There are some common issues associated with starting and stopping electrical motors. Depending on requirement, different starting and stopping methods can be used.



Direct-on-line

Direct-on-line starting (DOL) is the easiest and most commonly used starting method. It is suitable for stable networks and mechanically stiff and well-dimensioned shaft systems due to the high current and torque generated during start. DOL starting is uncontrolled, which means that the motor will start with maximum current and torque regardless of load type.



Star-delta

A star-delta starter reduces current and torque during start. The starting current is about one third compared to direct-on-line starting, although it also reduces the starting torque to about 25 percent. Star-delta is not adjustable, so if the torque is reduced too much, the motor will not start. Current peaks will happen when switching from star to delta connection.

Typical torque and current curves from starting a motor

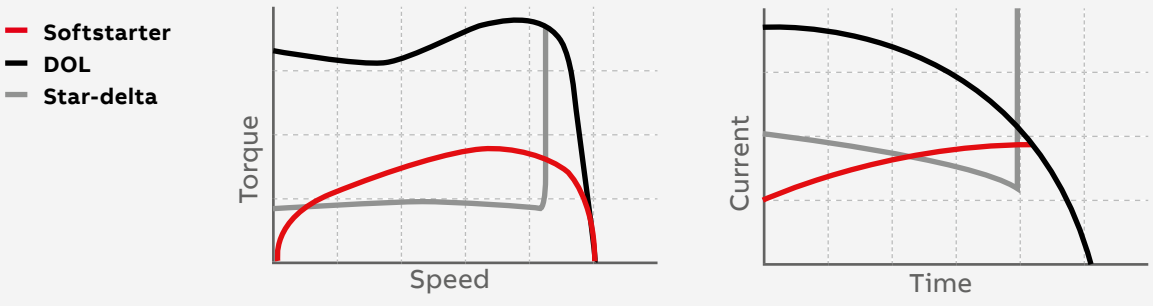







Softstarter

Like direct-on-line and star delta starters, softstarters are used to start and stop motors in full-speed applications. It eliminates common problems associated with motor starting and stopping, including electrical surges, spikes and high inrush currents. Because it offers soft starting and stopping, a softstarter is the optimal compromise between a direct-on-line or star-delta starter and a variable speed drive in many full-speed motor applications.

Variable speed drive

Like a softstarter, a variable speed drive (VSD) can perform soft motor starting and stopping. However, the VSD was designed primarily to control motor speed, resulting in energy efficient motor operation in variable speed applications. Using a VSD with the sole purpose of ensuring soft starting and stopping of full-speed motors can therefore be considered an unnecessarily advanced solution.

Comparison between different starting methods

The table below describes which problems are prevented, using the most common starting methods.

	Direct on line DOL	Star-delta start Y/D	Softstarter	Drive
Reduce high inrush current	–	●	●	●
Reduce heavy wear on bearings, shafts, gear boxes, etc	–	○	●	●
Prevent slipping belts	–	○	●	●
Remove torque/current peaks	–	–	●	●
Prevent water hammering in piping system	–	–	●	●
Need of variable speed control	–	–	–	●

● = standard, ○ = reduced, – = not available

ABB softstarters
A part of your motor starting solution

Motor starting requires several components to work perfectly together. ABB is a one-stop shop for motor starting, offering all the necessary components and complete motor starting solutions, proven together in numerous installations worldwide.

Can I use a softstarter on a ship?

ABB softstarters PSE and PSTX have marine approvals and are certified for marine environment.

Ships uses IT-networks which means that there is a floating electrical ground. It is possible to use an ABB softstarter in such a network but it is recommended to not connect the functional ground on the softstarter to the ship to avoid disturbances from the network to effect the electronics inside the softstarter.

Can I use a softstarter for an ATEX motor?

ABB softstarter PSTX can be used to start ATEX classified motors in EX environments. However, always consult with your local ATEX certified expert for component selection and system design. Listed below are some points for consideration (but not limited to):

- Locate the softstarter outside the EX area, or in an ATEX approved panel
- The PSTX Softstarter has not a specific ATEX approved motor overload protection. The standard (global or local) may require this depending on the type of installation. If the standard requires it an external ATEX approved EOL/TOL should be considered
- Select softstarter according to normal or heavy-duty start depending on your application.
- A line/fault contactor can be used in case of failure
- Determine the short circuit coordination rating and type that is needed for the application. Typically, there should be a coordination for a device, for example a fault contactor, that won't get welded shut in case of short circuit.

Always consult with certified ATEX expert and follow local laws and regulations that applies.

Typical motor control cabinet
Overview



Safety relay
The Sentry safety relay series are powerful and easy to use. They can monitor E-stops or other type of safety devices up to PLe/SIL3.



Power supply CP-C.1
Power reserve and switching of high peak currents help maximize system availability. Rated output voltage 24 V DC



Liquid level monitoring relays CM-ENS
- Monitoring and signalling the water level



Short circuit breaker MCCB
Short circuit protection of motor
Possibility for electrical isolation



PLC AC500
- Automatic control
- Remote communication



Switch fuse
- Short circuit protection of downstream devices
- Type 2 coordination when using rapid fuses
- Making and breaking of motor loads (AC-23A)
- Safe isolation

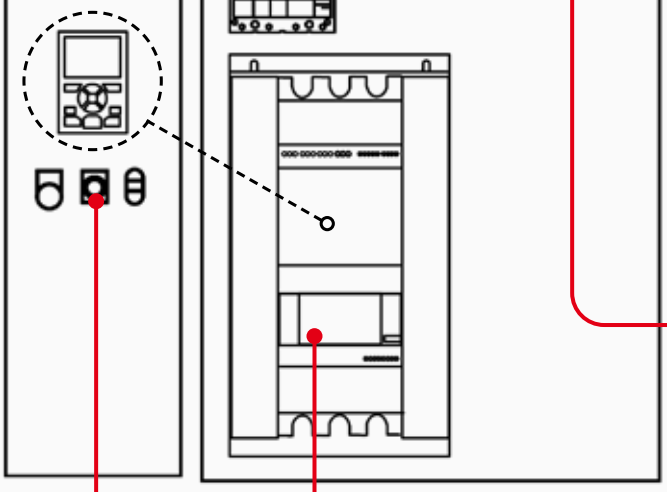



Line contactor AF
- Isolation at stop
- Isolation at faults
- Emergency stop
- Back-up DOL starter



Pilot devices
- Remote control of motor
- Indication of Softstarter and motor status with light and sound
- Emergency stop of motor



Softstarter
- Soft start and stop with reduced current
- Features to improve process productivity
- Detachable keypad for front door mounting on a panel

Softstarters portfolio
Overview



PSR - The compact range
PSR is our most compact softstarter with basic benefits and values. PSR can handle up to 100 starts per hour. Suitable for small motors.

Current: 3 A... 105 A

Main voltage: 208 V... 600 V

Application features

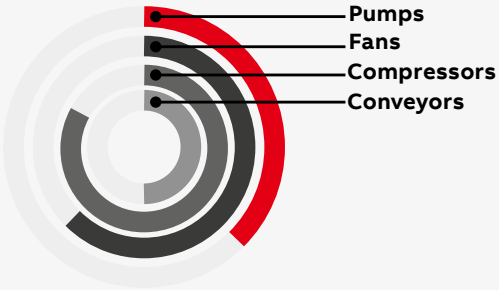



PSRC - For scroll compressor
PSRC is fast and easy to install with fixed settings. Designed for scroll compressors results in less stress on the compressor reducing the maintenance cost to a minimum.

Current: 3 A... 105 A

Main voltage: 208 V... 600 V

Application features

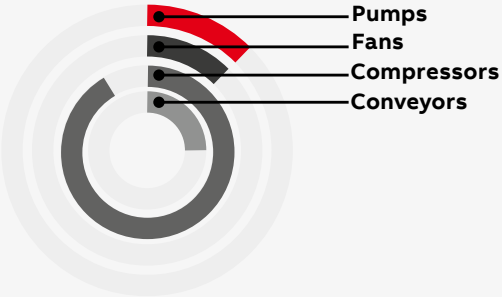



PSE - The efficient range
The new generation PSE is a true general purpose softstarter. It's a perfect balance between high starting capacity and cost efficiency. Now featuring built-in fieldbus communication.

Current: 18 A... 370 A

Main voltage: 208 V... 600 V

Application features

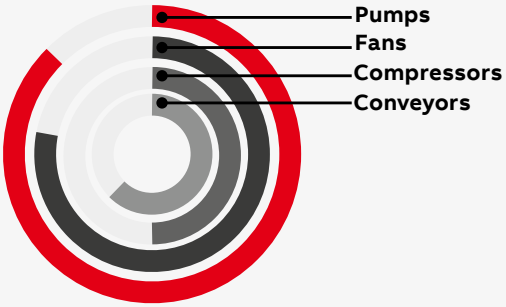



PSTX - The advanced range
PSTX is the most complete alternative for any motor starting application. Featuring built-in modbus and anybus modules that support all major communication protocols.

Current: 30 A... 1250 A

Main voltage: 208 V... 690 V

Application features

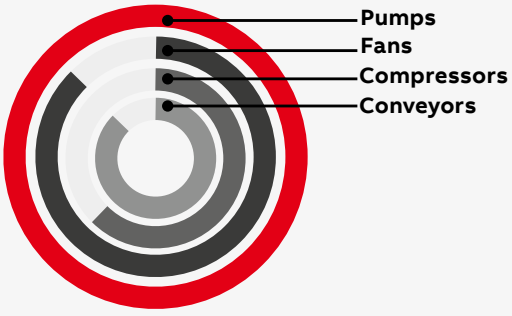

Softstarters selection

ABB softstarters offering consists of four ranges, covering every need. The products help you secure motor reliability, improve installation efficiency and increase application productivity.






Product range overview	PSR	PSRC	PSE	PSTX
Technology	Basic	Basic	General	Advanced
Motor size	Small – up to 105 A	Small – up to 105 A	Medium – up to 370 A	Large – up to 1250 A
Installation efficiency	Basic	Basic	Medium	High
Motor protection	-	-	Medium	High
Application	All	Scroll compressor	All	All
Application enhancement	Basic	Basic	Medium	High
Fieldbus Communication	Yes	Yes	Yes	Yes
Anybus Communication	-	-	-	Yes
Torque control	-	-	Yes	Yes
Heavy duty starts	-	-	Yes	Yes
Frame sizes	A, B, C, D	A, B, C, D	A, B, C	A, B, C, D, E, F

Selection process

1 Determine softstarter series

First, determine the softstarter series that fulfill the needs of the application and motor. Use the guide on the left to explore the three series and the power range each one covers.

2 Match the softstarter size with the motor current

When the softstarter series is selected, the correct size should now be determined. The selection of a softstarter is based on the current. Find the softstarter that corresponds to the motor current.

3 Fine tune and select the correct size

The last step is to fine tune the selection, and there are three different factors to consider:

- Normal or a heavy load: If the load is characterized as a heavy load, select the next size softstarter in the series.
- High ambient temperature
- High altitude

Use the equations and the table on the right to find the correct de-rating equation.

Altitude formula
De-rate for altitudes between 1000-4000 m or 3280-13123 ft with the following equations for all softstarters:
In meters: % of Ie = 100 – (x-1000)/150
In feet: % of FLA = 100 – (y-3280)/480
Where x/y is the actual altitude in m/ft

Temperature equations	
PSTX and PSR In Celsius:	40...60 °C: Reduce Ie with 0.8%/°C
PSTX and PSR In Fahrenheit:	104...140 °F: Reduce FLA with 0.44%/°F
PSE In Celsius:	40...60 °C: Reduce Ie with 0.6%/°C
PSE In Fahrenheit:	104...140 °F: Reduce FLA with 0.33%/°F

Typical applications	
Normal duty start	**Heavy duty**
Bow thrusters	Centrifugal fan
Centrifugal pump	Conveyor belt (long)
Compressors	Crusher
Conveyor belt (short)	Stirrer
Elevator	Sawmill

Softstarters benefits and features

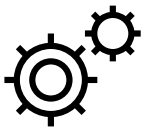

SECURE MOTOR RELIABILITY

Increase your motors lifetime...
With ABB softstarters, starting currents are easily optimized to your load, application and motor size.

...by protecting it from electrical stresses.
Over ten motor protection features are included to keep your motor safe from overloads and network irregularities.

Softstarter features	PSR	PSE	PSTX
Current limit	–	●	●
Current limit ramp and dual current limit	–	–	●
Electronic motor overload protection	–	●	●
Dual overload protection	–	–	●
Underload protection	–	●	●
Power factor underload protection	–	–	●
Locked rotor protection	–	●	●
Current/Voltage imbalance protection	–	–	●
Phase reversal protection	–	–	●
Customer defined protection	–	–	●
Motor heating	–	–	●
PTC/PT100 input for motor protection	–	–	●
Overvoltage/undervoltage protection	–	–	●
Earth-fault protection	–	–	●

● = standard, O = option, – = not available



IMPROVE INSTALLATION EFFICIENCY

Reduce your installation time and panel size...
ABB softstarterss are easy to install thanks to their compact design and many built-in features.

...by having everything that you need built in.
Built-in bypass saves energy and space while reducing heat generation: a complete motor starting solution in one unit designed and verified by ABB.

Softstarter features	PSR	PSE	PSTX
Built-in bypass	●	●	●
Inside-delta connection possible	–	–	●
Graphical display and keypad	–	●	●
Detachable keypad	–	–	●
Motor runtime and start count	–	–	●
Programmable warning functions	–	–	●
Diagnostics	–	–	●
Overload time-to-trip	–	–	●
Overload time-to-cool	–	–	●
Analog output	–	●	●
Fieldbus communication	O	●	●
Event log	–	O	●
Multiple languages	–	–	17
Electricity metering	–	–	●

● = standard, O = option, – = not available



INCREASE APPLICATION PRODUCTIVITY

Reduce the number of production stops...
ABB softstarters reduce mechanical stress on your application which increases uptime.

...by letting the softstarter do more than just starting.
Torque control, pump cleaning, motor break and many more features enables you to use your process to its full potential.

Softstarter features	PSR	PSE	PSTX
Torque control	–	●	●
Torque limit	–	–	●
Coated PCBA	–	●	●
Limp mode	–	–	●
Jog with slow speed forward/ reverse	–	–	●
Dynamic brake	–	–	●
Stand still brake	–	–	●
Sequence start	–	–	●
Full voltage start	–	–	●
Kick start	–	●	●
Automatic pump cleaning	–	–	●

● = standard, O = option, – = not available

Case studies



Tasmanian salmon operation keeps its fish cool with ABB softstarters
Tassal upgrades the motor control center in Australia's biggest land-based salmon hatchery with ABB Softstarters, ensuring the continuous operation of its water chillers.
For more information visit: Link

Lower the inrush current by 50%



Xylem - South Africa
ABB softstarters providing efficiency to the mining industry
Xylem reducing the number of components by 80%, shortened installation time by 60%. Costs cut to half has helped Xylem sell twice as many panels with softstarters as before. For more information visit: Link

Total panel costs reduced by 50%



Indian tourist town is pumped up over ABB Softstarters that help uninterrupted water supply
Shimla has cut pipeline damage 50% using Softstarters to help lift water thousands of feet from a dam to quench the thirst of millions. For more information visit: Link

Pipeline damage reduced by 50%

Wall mounting
Instructions

Product	Minimum distance to wall mm (in)			
	A	B	C	D
PSR				
PSR3 ... PSR16	0	0	25 (0.98)	N/A
PSR25 ... PSR30	0	0	25 (0.98)	N/A
PSR37 ... PSR45	0	0	25 (0.98)	N/A
PSR60 ... PSR105	0	0	25 (0.98)	N/A
PSRC				
PSR3 ... PSR16	0	0	25 (0.98)	N/A
PSR25 ... PSR30	0	0	25 (0.98)	N/A
PSR37 ... PSR45	0	0	25 (0.98)	N/A
PSR60 ... PSR105	0	0	25 (0.98)	N/A
PSE				
PSE18 ... PSE105	100 (3.94)	10 (0.39)	20 (0.79)	N/A
PSE142 ... PSE170	100 (3.94)	10 (0.39)	20 (0.79)	N/A
PSE210 ... PSE370	100 (3.94)	10 (0.39)	20 (0.79)	N/A
PSTX				
PSTX30 ... PSTX105	100 (3.94)	10 (0.39)	20 (0.79)	35 (1.38)
PSTX142 ... PSTX170	100 (3.94)	10 (0.39)	20 (0.79)	35 (1.38)
PSTX210 ... PSTX370	100 (3.94)	10 (0.39)	20 (0.79)	35 (1.38)
PSTX470 ...PSTX570	150 (5.91)	15 (0.59)	20 (0.79)	35 (1.38)
PSTX720 ... PSTX840	150 (5.91)	15 (0.59)	20 (0.79)	35 (1.38)
PSTX1050 ... PSTX1250	150 (5.91)	15 (0.59)	20 (0.79)	35 (1.38)

Minimum distance to front

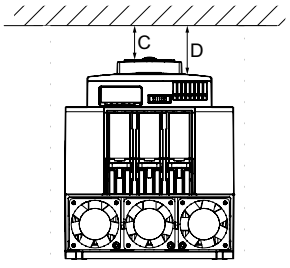

Minimum distance to wall

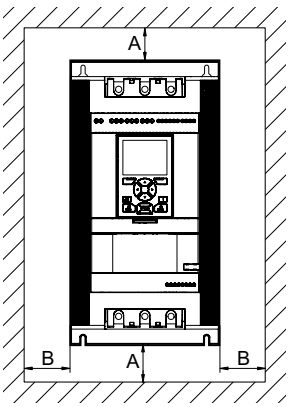

Maximum mounting angle

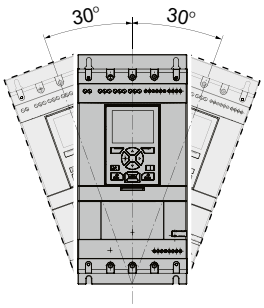

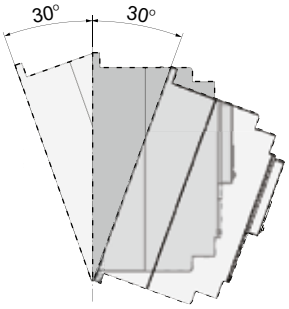

Certifications and approvals

The table below shows the certifications and approvals for ABB softstarters. For other certifications and/or approvals, please contact ABB.

Certifications and approvals

	Certifications							Approvals: ship classification societies					
Abbreviation approved in	CE EU	cULus Canada USA	CCC China	EAC Russia	ANCE Mexico	C-tick Australia	KC Korea	ABS	DNV	Lloyd's Register	CCS	PRS	Class NK
PSR3 ... PSR105	●	●	●	●	●	●	●	—	—	—	—	—	—
PSRC3 ... PSRC105	●	●	●	●	●	●	●	—	—	—	—	—	—
PSE18 ... PSE370	●	●	●	●	●	●	●	●	●	●	●	●	●
PSTX30 ... PSTX1250	●	●	●	●	●	●	●	●	●	●	●	●	●

Note: • Standard design approved, the products wear the certification mark when it is required.

Directives and standards	
No. 2006/95/EC	Low voltage equipment
No. 2004/108/EC	Electromagnetic compatibility
EN 60947-1	Low-voltage switchgear and controlgear - Part 1: General rules
EN 60947-4-2	AC semiconductor motor controllers and starters
UL 508	Industrial Control Equipment
CSA C22.2 No 14	Industrial Control Equipment

Items included in the box with the softstarter

	Multi-language manual	Terminal kit	Cable and mounting kit for detachable keypad
PSR3 ... PSR105	●	O	—
PSRC3 ... PSRC105	●	O	—
PSE18 ... PSE105	●	O	—
PSE142...PSE370	●	—	—
PSTX30 ... PSTX105	●	O	●
PSTX142...PSTX1250	●	—	●

● = included, O = built-in, – = not included

The PSR softstarter is the most compact of all the softstarter ranges which allows for design of a compact starting equipment.

The PSR combined with a manual motor starter makes up a far more compact starting solution than the complex star-delta starter, and with the built-in bypass, the energy losses inside the softstarter are highly reduced.

PSR
The compact range

20 **Introduction**

22 **Coordination examples**

23 **Ordering details**

24 **Accessories**

25 **Technical data**

26 **Main dimensions**

27 **Circuit diagrams**

PSR - The compact range
Introduction



Technical specifications
- Rated operational current: 3...105 A
- Operational voltage: 208...600 V AC
- Wide rated control supply voltage: 100...240 V AC, 50/60 Hz or 24 V AC/DC

Features
- Two-phase controlled
- Soft start and stop with voltage ramp
- Built-in bypass for energy saving and easy installation
- Easy set-up by three potentiometers
- Run and Top of Ramp relays available for monitoring
- Connection kits available for connection to ABB´s manual motor starters (MMS)

Protections
- Motor protection with manual motor starter

Communication
- Fieldbus communication with fieldbus plug adapter and fieldbus plug

---

SECURE MOTOR RELIABILITY

Reduce the electrical stresses and keep the motor protected with the MMS
The PSR reduces the starting current for the motor. The possibility to connect it to the manual motor starter makes it possible to build a compact and complete starting solution with overload and short-circuit protection.

IMPROVE INSTALLATION EFFICIENCY

Saving time and money with built-in bypass and easy set-up
On the PSR, the bypass is built in and verified by ABB, saving you time during installation and space in your panel. Set-up is done through three potentiometers making it very fast and easy.

INCREASE APPLICATION PRODUCTIVITY

Reduce the mechanical stresses on your motor
Soft start and stop with PSR will reduce mechanical wear and tear on the application and increase the availability and uptime.

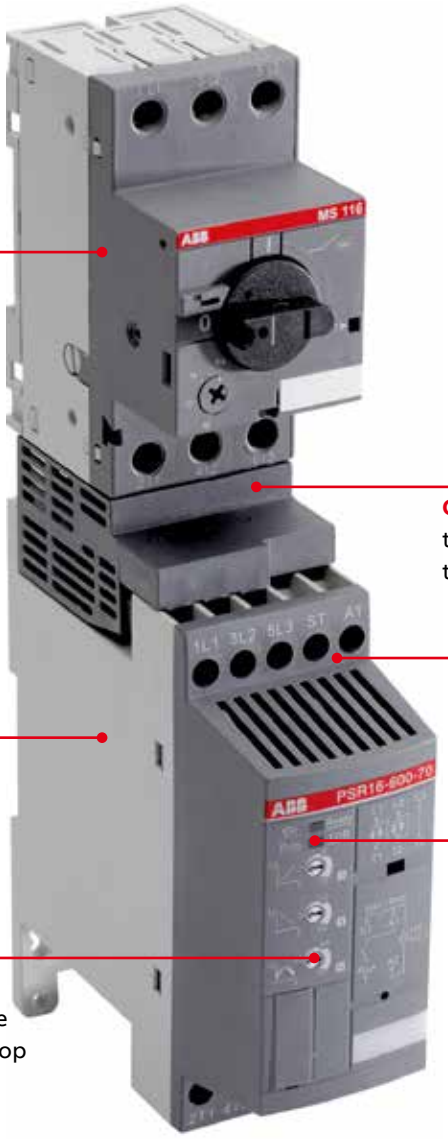

Motor protection with manual motor starter PSR together with the MMS to get a complete motor starter with soft start and stop together with overload and short circuit protection.

Connection kit (optional) simplifies installation of the PSR by making the connection to the MMS screwless.

Output signal relays for Run and Top of ramp (PSR25 ... PSR105).

Screw or DIN-rail mounted PSR is fast and easy to install by using screw mounting or DIN-rail mounting (PSR3 ... PSR45).

LED indicators for On/Ready and Run/Top of ramp.

Three potentiometers for settings
Set-up is made very easy with only three potentiometers, for start ramp time, stop ramp time and initial/end voltage level.

Settings

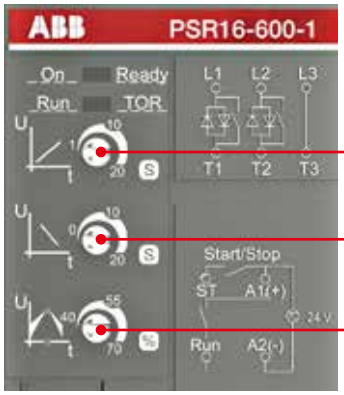

1. Start = 1...20 sec

2. Stop = 0...20 sec - including the step down voltage Step down = 2% reduction for each second increased stop ramp

3. U_{ini} = 40...70% results in end voltage = 30...60%

Start and stops

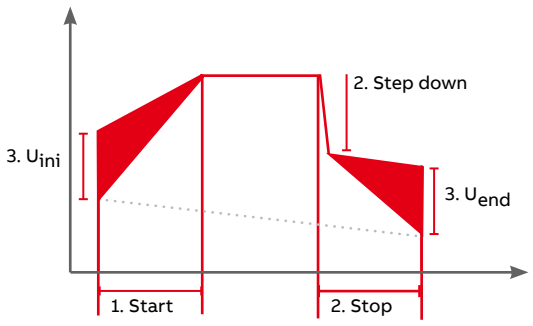

PSR - The compact range

Coordination examples



PSR3 ... PSR16



PSR25 ... PSR30



PSR37 ... PSR45



PSR60 ... PSR105

Normal start In-line connected

	Technical data				Using manual motor starters type 1 coordination will be achieved [1]	Using gG fuses type 1 coordination will be achieved [1]	Suitable switch fuse for the above gG fuses [1]	J-type fuses for UL coordination [1]	Overload protection is used to protect the motor from over heating [1]	The line contactor is not required for the softstarter itself but often used to open if OL trips [1]
Softstarter	IEC kW (400V)	IEC max A	UL HP (440-480 V)	UL max FLA	Manual motor starter (50 kA) 400 V, 40 ºC	Fuse protection (50 kA) gG Fuse	Switch fuse	Max. fuse, J-type	Thermal overload relay	Line contactor
PSR3	1.5	3.9	2	3.4	MS116	10A	OS32G	35A	TF42DU	AF9
PSR6	3	6.8	3	6.1	MS116	16A	OS32G	35A	TF42DU	AF9
PSR9	4	9	5	9	MS116	25A	OS32G	35A	TF42DU	AF9
PSR12	5.5	12	7.5	11	MS132	32A	OS32G	35A	TF42DU	AF12
PSR16	7.5	16	10	15.2	MS132	32A	OS32G	35A	TF42DU	AF16
PSR25	11	25	15	24.2	MS132	50A	OS32G	60A	TF42DU	AF26
PSR30	15	30	20	28	MS132	63A	OS32G	60A	TF42DU	AF30
PSR37	18.5	37	25	34	MS165	100A	OS125G	90A	TF42DU	AF38
PSR45	22	45	30	46.2	MS165	125A	OS125G	90A	TA75DU	AF52
PSR60	30	60	40	59.4	MS165	125A	OS125G	110A	TA75DU	AF65
PSR72	37	72	50	68	MS495	200A	OS250	125A	TA75DU	AF80
PSR85	45	85	60	80	MS495	200A	OS250	150A	TA110DU	AF96
PSR105	55	105	75	104	MS495	250A	OS250	200A	TA110DU	AF116

[1] These are an example of coordination. For more examples see: https://applications.it.abb.com/SOC/Page/Selection.aspx
[2] Can be used with MS495 up to 100 A



Coordination tables (SOC) >
For more examples of coordination visit the online tool for coordination with short circuit protection, overload protection and line contactor.

PSR - The compact range

Normal starts, class 10, in-line

Ordering details



PSR3 ... PSR16



PSR25 ... PSR30



PSR37 ... PSR45



PSR60 ... PSR105

Rated operational voltage U_e, 208...600 V AC, Rated control supply voltage, U_s, 100...240 V AC, 50/60 Hz

IEC rated operational power			current	UL/CSA rated operational power								
230V Pe kW	400V Pe kW	500V Pe kW	Ie A	200/208V Pe hp	220/240V Pe hp	440/480V Pe hp	550/600V Pe hp	FLA	Type	Order code	Net Weight (kg)	Net Weight (lb)
0.75	1.5	2.2	3.9	0.5	0.75	2	2	3.4	PSR3-600-70	1SFA896103R7000	0.4	0.8
1.5	3	4	6.8	1	1.5	3	5	6.1	PSR6-600-70	1SFA896104R7000	0.4	0.8
2.2	4	4	9	2	2	5	7.5	9	PSR9-600-70	1SFA896105R7000	0.4	0.8
3	5.5	5.5	12	3	3	7.5	10	11	PSR12-600-70	1SFA896106R7000	0.4	0.8
4	7.5	7.5	16	3	5	10	10	15.2	PSR16-600-70	1SFA896107R7000	0.4	0.8
5.5	11	15	25	7.5	7.5	15	20	24.2	PSR25-600-70	1SFA896108R7000	0.6	1.3
7.5	15	18.5	30	7.5	10	20	25	28	PSR30-600-70	1SFA896109R7000	0.6	1.3
7.5	18.5	22	37	10	10	25	30	34	PSR37-600-70	1SFA896110R7000	1.0	2.2
11	22	30	45	15	15	30	40	46.2	PSR45-600-70	1SFA896111R7000	1.0	2.2
15	30	37	60	20	20	40	50	59.4	PSR60-600-70	1SFA896112R7000	2.1	4.6
22	37	45	72	20	25	50	60	68	PSR72-600-70	1SFA896113R7000	2.1	4.6
22	45	55	85	25	30	60	75	80	PSR85-600-70	1SFA896114R7000	2.1	4.6
30	55	55	105	30	40	75	100	104	PSR105-600-70	1SFA896115R7000	2.1	4.6

Rated operational voltage U_e, 208...600 V AC, Rated control supply voltage, U_s, 24 V AC/DC, 50/60 Hz

IEC rated operational power			current	UL/CSA rated operational power								
230V Pe kW	400V Pe kW	500V Pe kW	Ie A	200/208V Pe hp	220/240V Pe hp	440/480V Pe hp	550/600V Pe hp	FLA	Type	Order code	Net Weight (kg)	Net Weight (lb)
0.75	1.5	2.2	3.9	0.5	0.75	2	2	3.4	PSR3-600-11	1SFA896103R1100	0.4	0.8
1.5	3	4	6.8	1	1.5	3	5	6.1	PSR6-600-11	1SFA896104R1100	0.4	0.8
2.2	4	4	9	2	2	5	7.5	9	PSR9-600-11	1SFA896105R1100	0.4	0.8
3	5.5	5.5	12	3	3	7.5	10	11	PSR12-600-11	1SFA896106R1100	0.4	0.8
4	7.5	7.5	16	3	5	10	10	15.2	PSR16-600-11	1SFA896107R1100	0.4	0.8
5.5	11	15	25	7.5	7.5	15	20	24.2	PSR25-600-11	1SFA896108R1100	0.6	1.3
7.5	15	18.5	30	7.5	10	20	25	28	PSR30-600-11	1SFA896109R1100	0.6	1.3
7.5	18.5	22	37	10	10	25	30	34	PSR37-600-11	1SFA896110R1100	1.0	2.2
11	22	30	45	15	15	30	40	46.2	PSR45-600-11	1SFA896111R1100	1.0	2.2
15	30	37	60	20	20	40	50	59.4	PSR60-600-11	1SFA896112R1100	2.1	4.6
22	37	45	72	20	25	50	60	68	PSR72-600-11	1SFA896113R1100	2.1	4.6
22	45	55	85	25	30	60	75	80	PSR85-600-11	1SFA896114R1100	2.1	4.6
30	55	55	105	30	40	75	100	104	PSR105-600-11	1SFA896115R1100	2.1	4.6

PSR - The compact range

Accessories



Connection kit
for PSR3...16



Connection kit
for PSR25...30



Connection kit
for PSR37...45



Connection kit
for PSR60...72

Connection kit

Article	breaker type	Type	Order code	Pkg qty	Net kg	lb
PSR3...16	MS116/132	PSR16-MS116	1SFA896211R1001	1	0.03	0.08
PSR25...30	MS132	PSR30-MS132	1SFA896212R1001	1	0.03	0.08
PSR37...45	MS165	PSR45-MS165	1SFA896216R1001	1	0.05	0.11
PSR60...72	MS165	PSR60-MS165	1SFA896215R1001	1	0.05	0.11
PSR60...105	MS495	PSR105-MS495	1SAM501903R1001	1	0.03	0.08



Fan

Fan

Article	Type	Order code	Pkg qty	Net kg	lb
PSR3...45	PSR-FAN3-45A	1SFA896311R1001	1	0.01	0.02
PSR60...105	PSR-FAN60-105A	1SFA896313R1001	1	0.01	0.03



Terminal enlargements

Terminal enlargements

Article	Type	Order code	Pkg qty	Net kg	lb
PSR60... PSR105	PSLW-72	1SFA899002R1072	1	0.16	0.35

Note: Wire range mm² 1 x 10...50 mm², 2 x 10...25 mm²



Fieldbus plug adapter

Fieldbus plug adapter with cable

Article	Type	Order code	Pkg qty	Net kg	lb
Fieldbus plug adapter	PS-FBPA	1SFA896312R1002	1	0.05	0.11

PSR - The compact range

Technical data

Softstarter types	PSR3	PSR6	PSR9	PSR12	PSR16	PSR25	PSR30	PSR37	PSR45	PSR60	PSR72	PSR85	PSR105
Max. Power loss at rated I_e	0.7 W	2.9 W	6.5 W	11.5 W	20.5 W	25 W	36 W	5.5 W	8.1 W	3.6 W	5.2 W	7.2 W	6.6 W

Technical data	
Rated insulation voltage U_i	600 V
Rated operational voltage U_e	208...600 V +10%/-15%, 50/60 Hz ±5%
Rated control supply voltage U_s	100...240 V AC, 50/60Hz ±5% or 24 V AC/DC, +10%/-15%
Starting capacity at I_e	4 x I_e for 6 sec.
Maximum altitude	4000 m (13123 ft) [3]
Number of starts per hour	
standard	10 [1]
with aux. fan	20 [1]
Ambient temperature	
during operation	-25...+60 ºC (-13...+140 F) [2]
during storage	-40...+70 ºC (-40...+158 F)
Degree of protection	
main circuit	PSR3 - PSR30: IP20 PSR37 - PSR105: IP10
control circuit	PSR3 - PSR30: IP20
Power consumption:	
at 100...240 V AC	PSR3 - PSR30: 12 VA PSR37 - PSR105 10 VA
at 24 V AC/DC	PSR3 - PSR30: 5 W PSR37 - PSR105: 10 VA
Fuse for control supply voltage	
for 100-240V version: 6 A slow acting fuse	
for 24V version: 1.5 A slow acting fuse	
Signal relays for run signal: PSR3.. 105	
Resistive load	3 A
AC-15 (contactor)	0.5 A
Signal relays for top of ramp signal: PSR25... 105	
Resistive load	3 A
AC-15 (contactor)	0.5 A
LED	
For On/Ready	Green
For Run/Top of ramp	Green
Settings	
Ramp time during start	1...20 sec.
Ramp time during stop	0...20 sec.
Initial- and end voltage	40...70%

[1] Valid for 50% on time and 50% off time. If other data is required, contact your local ABB office.

[2] Above 40 ºC (104 F) up to max. 60 ºC (140 F) reduce the rated current with 0.8% per ºC (0.44% per F).

[3] When used at high altitudes, above 1000 meters (3281 ft) up to 4000 meters (13123 ft), de-rate the rated current using the following formula.

[% of I_e = 100 - $\frac{x-1000}{150}$] x = actual altitude of the softstarter in meter.

Number of starts per hour using PSR softstarters

Motor current — Starts/hour without auxiliary fan

I_e	10	20	30	40	50	60	80	100
3 A	PSR3	PSR3	PSR3	PSR3	PSR3	PSR3	PSR3	PSR6
6 A	PSR6	PSR6	PSR6	PSR6	PSR6	PSR9	PSR9	PSR9
9 A	PSR9	PSR9	PSR9	PSR12	PSR12	PSR12	PSR16	PSR25
12 A	PSR12	PSR12	PSR12	PSR16	PSR25	PSR25	PSR30	PSR30
16 A	PSR16	PSR25	PSR25	PSR25	PSR30	PSR30	PSR37	PSR37
25 A	PSR25	PSR30	PSR37	PSR37	PSR37	PSR45	PSR45	PSR60
30 A	PSR30	PSR37	PSR37	PSR45	PSR45	PSR60	PSR60	PSR72
37 A	PSR37	PSR45	PSR45	PSR60	PSR60	PSR72	PSR85	PSR105
45 A	PSR45	PSR45	PSR60	PSR60	PSR72	PSR85	PSR105	-
60 A	PSR60	PSR60	PSR72	PSR85	PSR105	PSR105	-	-
72 A	PSR72	PSR85	PSR105	PSR105	-	-	-	-
85 A	PSR85	PSR105	PSR105	-	-	-	-	-
105 A	PSR105	-	-	-	-	-	-	-

Number of starts per hour using PSR softstarters

Motor current — Starts/hour with auxiliary fan

I_e	10	20	30	40	50	60	80	100
3 A	PSR3	PSR3	PSR3	PSR3	PSR3	PSR3	PSR3	PSR3
6 A	PSR6	PSR6	PSR6	PSR6	PSR6	PSR6	PSR6	PSR9
9 A	PSR9	PSR9	PSR9	PSR9	PSR9	PSR12	PSR12	PSR12
12 A	PSR12	PSR12	PSR12	PSR12	PSR12	PSR16	PSR25	PSR25
16 A	PSR16	PSR16	PSR25	PSR25	PSR25	PSR25	PSR30	PSR30
25 A	PSR25	PSR2	PSR30	PSR37	PSR37	PSR37	PSR37	PSR45
30 A	PSR30	PSR30	PSR37	PSR37	PSR45	PSR45	PSR45	PSR45
37 A	PSR37	PSR37	PSR45	PSR45	PSR45	PSR45	PSR60	PSR60
45 A	PSR45	PSR45	PSR45	PSR60	PSR60	PSR60	PSR72	PSR72
60 A	PSR60	PSR60	PSR60	PSR72	PSR72	PSR85	PSR105	-
72 A	PSR72	PSR72	PSR72	PSR85	PSR105	PSR105	-	-
85 A	PSR85	PSR85	PSR105	PSR105	-	-	-	-
105 A	PSR105	PSR105	-	-	-	-	-	-

Data based on an ambient temperature of 40° (104 F), starting current of 4 x Ie and ramp time 6 seconds. For more optimized selection or to use PSR for heavy-duty starts, please use the softstarter selection tool.

PSR - The compact range

Main dimensions

PSR3 ... PSR16

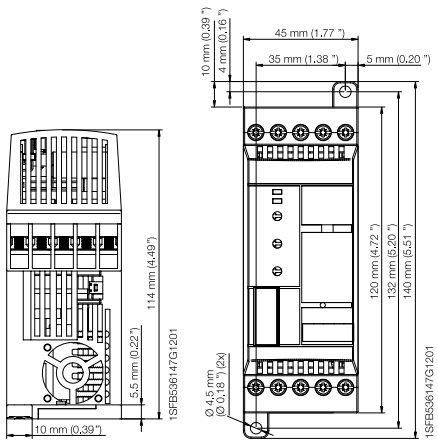

PSR25 ... PSR30

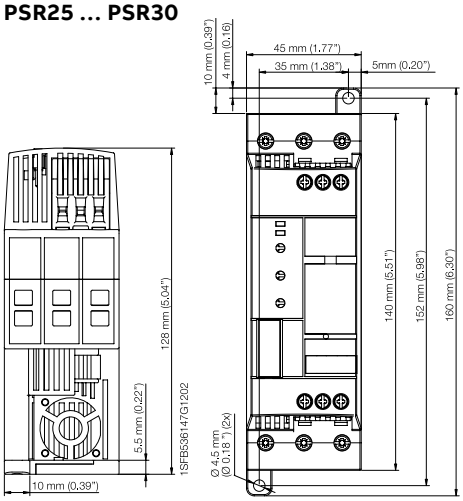

PSR37 ... PSR45

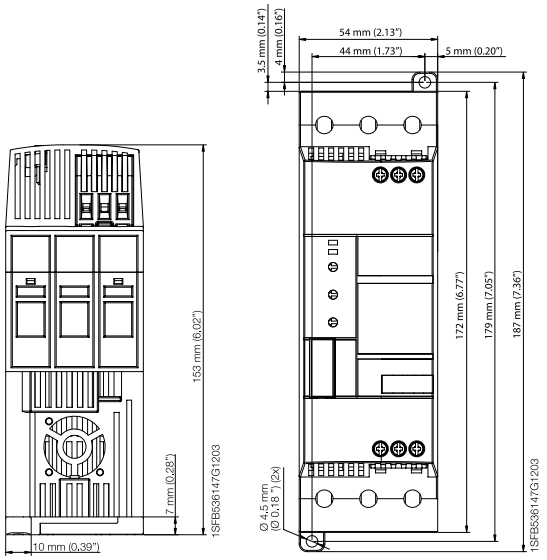

PSR60 ... PSR105

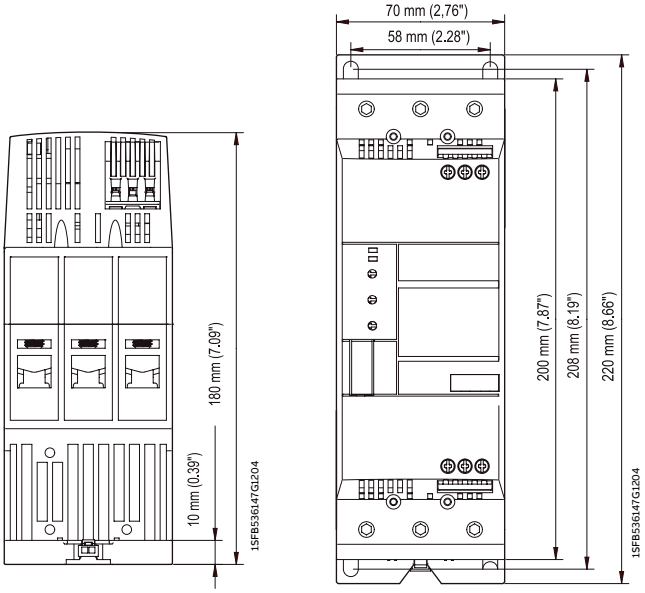

PSR - The compact range

Circuit diagrams

PSR3 ... PSR16 With MMS

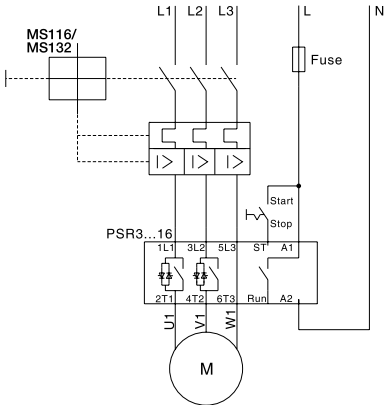

With MMS and auxiliary contact

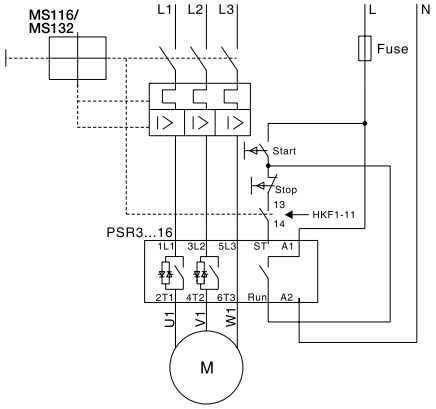

With fuses, contactor and O.L.

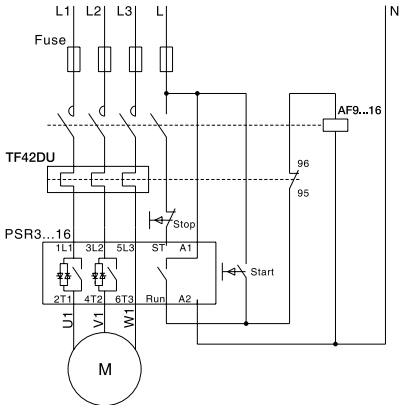

PSR25 ... PSR45 With MMS

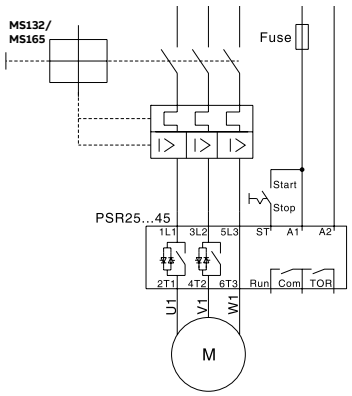

With MMS and auxiliary contact

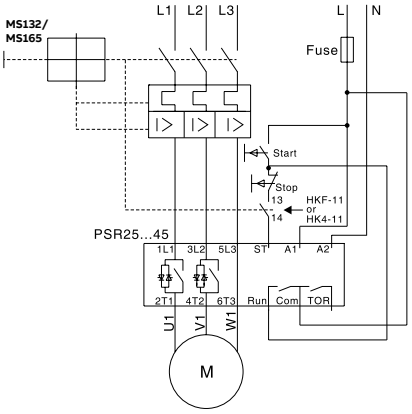

With fuses, contactor and O.L.

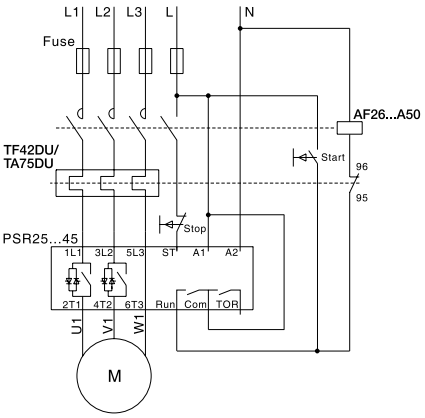

PSR60 ... PSR105 With MMS

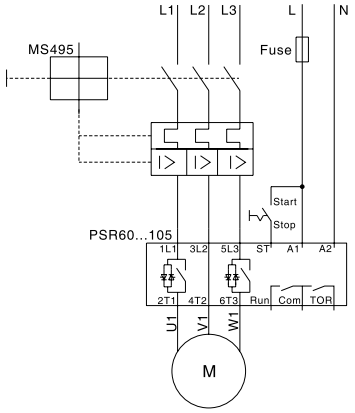

With MMS and auxiliary contact

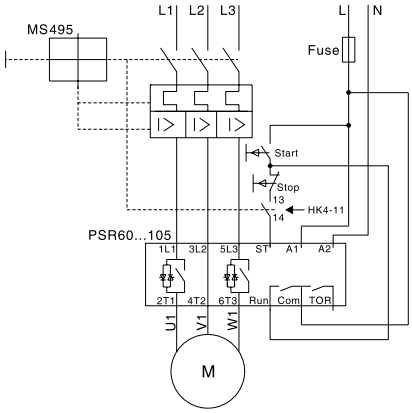

With fuses, contactor and O.L.

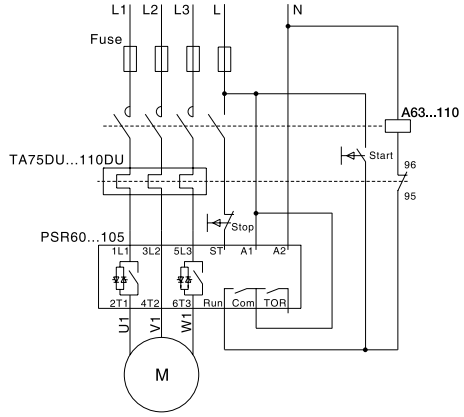

The PSRC softstarter is fast and easy to install with fixed settings. Designed for scroll compressors results in less stress on the compressor reducing the maintenance cost to a minimum.

PSRC
For scroll compressors

30 **Compressors**

32 **PSRC Introduction**

34 **Coordination examples**

35 **Ordering details**

36 **Accessories**

37 **Technical data**

38 **Dimensions**

39 **Circuit diagrams**

PSRC is optimized for scroll compressors
Less stress and reducing maintenance cost

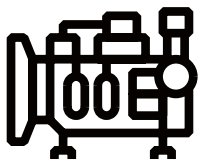

General information for compressors
There are different types of compressors like piston compressor, scroll compressor, screw compressor etc. Smaller compressors are often of the piston type and the load torque increases linearly with the speed. Screw compressors are often used when there is a bigger need for air flow and this type has a load torque increasing with the square of the speed. Most compressors are started unloaded and are considered to be light starts.

By using an ABB´s softstarter it is possible to limit the starting torque to a level suitable for all different applications. The result is less stress on the compressor reducing the maintenance cost to a minimum. For scroll compressors, ABB has the special version PSRC that is optimized for that application.

Selection of a suitable softstarter
A compressor is usually a normal start and then the softstarter can be selected according to the motor kW size. If the compressor is a heavy duty start, the softstarter should be upsized one size. The same applies if more than 10 starts per hour are performed, upsize one size.

Features for scroll compressors
- Reduced starting current
- Short starting time (<1s) to guarantee lubrication of the compressor
- Recommended minimum starting voltage to secure a start in 400 V network
  - 200V for smaller compressors
  - 220V for bigger compressors

Features for the OEMs
- Easy and reliable
- 60 degree ambient temperature
- "Temper proof" No risk of parameters getting changed after installation

Recommended basic settings for scroll compressors:
Start ramp: < 1 sec.
Start mode: Voltage ramp
Stop ramp: 0 sec
Stop mode: No ramp
Start ramp initial level: 50%



Rhoss - Italy
Keeps air flowing

The client
Rhoss is an Italian specialist in air conditioning and air handling products and systems. For over 40 years, it has been synonymous with quality, innovation and top level service. In a recent project, where high inrush currents caused problems to the scroll compressors used to compress air, Rhoss contacted ABB for a more sustainable motor starting solution.

The challenge
Many HVAC (Heating Ventilation and Air-Conditioning) projects use scroll compressors which require short starting times. In combinanation with customers requiring low starting currents, this proved a challenge for Rhoss. Other challenges are high temperatures and small spaces. Italian Rhoss had experienced all of the above in previous projects and sought a solution. They needed just one single product that could handle all these challenges. ABB had an answer.

The ABB solution
Rhoss implemented ABB's softstarters in its starting equipment and were soon aware of the concept's many benefits. An integrated bypass meant the starting solution took up less space which also meant Rhoss could spend more of the space on controlling the high temperatures. The biggest benefit of all though is that the softstarter reduced the inrush currents of the scroll compressors by 60 percent while still maintaining the short starting time that this sort of application needs. The lowered starting currents mean less stress is put both on motor and compressor, reducing the need of maintenance and repairs.

Starting currents reduced by 60%

PSRC
Introduction



Technical specifications
- Rated operational current: 3...105 A
- Operational voltage: 208...600 V AC
- Wide rated control supply voltage: 100...240 V AC, 50/60 Hz

Features
- Two-phase controlled
- Soft start with voltage ramp
- Built-in bypass for energy saving and easy installation
- Easy set-up
- Run and Top of Ramp relays available for monitoring
- Ambient temperature -25 to +60 degrees
- Connection kits available for connection to ABB´s manual motor starters (MMS)

Protections
- Motor protection with manual motor starter

Communication
- Fieldbus communication with fieldbus plug adapter and fieldbus plug

---

SECURE MOTOR RELIABILITY

Reduce the electrical stresses and keep the motor protected with the MMS
The PSRC reduces the starting current for the motor. The possibility to connect it to the manual motor starter makes it possible to build a compact and complete starting solution with overload and short-circuit protection.

IMPROVE INSTALLATION EFFICIENCY

Saving time and money with built-in bypass and easy set-up
On the PSRC, the bypass is built in and verified by ABB, saving you time during installation and space in your panel.

INCREASE APPLICATION PRODUCTIVITY

Reduce the mechanical stresses on your motor
Soft start and stop with PSRC will reduce mechanical wear and tear on the application and increase the availability and uptime.

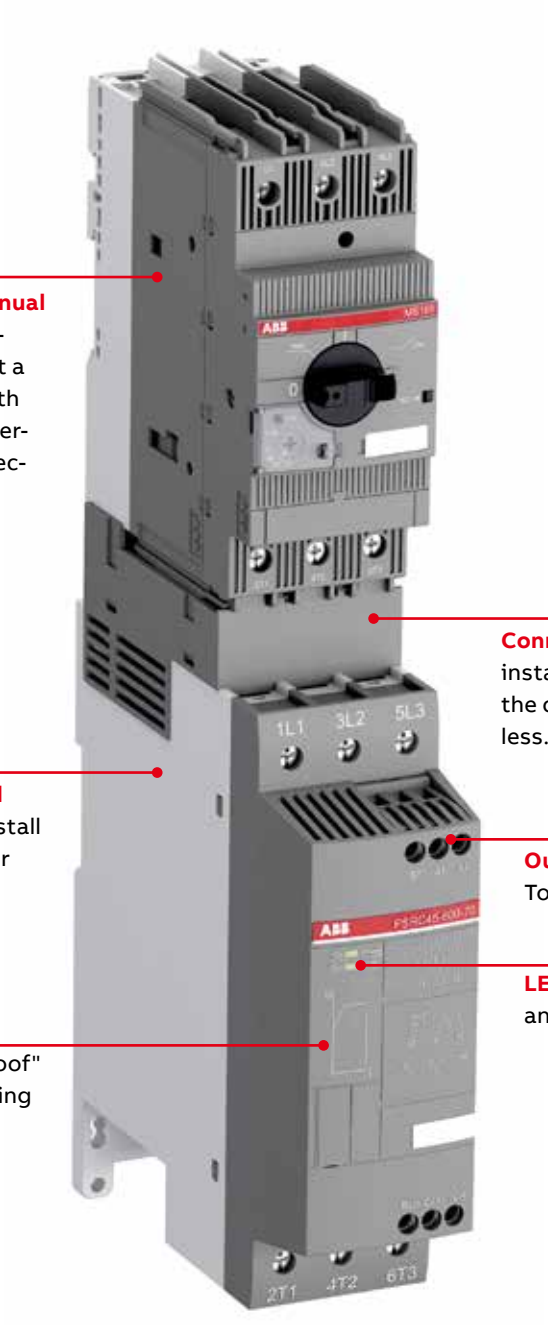

Motor protection with manual motor starter the PSRC together with the MMS to get a complete motor starter with soft start together with overload and short circuit protection.

Connection kit (optional) simplifies installation of the PSRC by making the connection to the MMS screwless.

Screw or DIN-rail mounted PSRC is fast and easy to install by using screw mounting or DIN-rail mounting (PSRC3 ... PSRC45).

Output signal relays for Run and Top of ramp (PSRC25 ... PSRC105).

LED indicators for On/Ready and Run/Top of ramp.

Fixed settings "Temper proof" No risk of parameters getting changed after installation.

PSRC
Coordination examples


PSRC3... PSRC16


PSRC25... PSRC30


PSRC37... PSRC45


PSRC60... PSRC105

Normal start In-line connected

	Technical data				Using manual motor starters type 1 coordination will be achieved [1]	Using gG fuses type 1 coordination will be achieved [1]	Suitable switch fuse for the above gG fuses [1]	J-type fuses for UL coordination [1]	Overload protection is used to protect the motor from over heating [1]	The line contactor is not required for the softstarter itself but often used to open if OL trips [1]
Softstarter	IEC kW (400V)	IEC max A	UL HP (440-480 V)	UL max FLA	Manual motor starter (50 kA) 400 V, 40 ºC	Fuse protection (50 kA) gG Fuse	Switch fuse	Max. fuse, J-type	Thermal overload relay	Line contactor
PSRC3	1.5	3.9	2	3.4	MS116	10A	OS32G	35A	TF42DU	AF9
PSRC6	3	6.8	3	6.1	MS116	16A	OS32G	35A	TF42DU	AF9
PSRC9	4	9	5	9	MS116	25A	OS32G	35A	TF42DU	AF9
PSRC12	5.5	12	7.5	11	MS132	32A	OS32G	35A	TF42DU	AF12
PSRC16	7.5	16	10	15.2	MS132	32A	OS32G	35A	TF42DU	AF16
PSRC25	11	25	15	24.2	MS132	50A	OS32G	60A	TF42DU	AF26
PSRC30	15	30	20	28	MS132	63A	OS32G	60A	TF42DU	AF30
PSRC37	18.5	37	25	34	MS165	100A	OS125G	90A	TF42DU	AF38
PSRC45	22	45	30	46.2	MS165	125A	OS125G	90A	TA75DU	AF52
PSRC60	30	60	40	59.4	MS165	125A	OS125G	110A	TA75DU	AF65
PSRC72	37	72	50	68	MS495	200A	OS250	125A	TA75DU	AF80
PSRC85	45	85	60	80	MS495	200A	OS250	150A	TA110DU	AF96
PSRC105	55	105	75	104	MS495	250A	OS250	200A	TA110DU	AF116

[1] These are an example of coordination. For more examples see: https://applications.it.abb.com/SOC/Page/Selection.aspx
[2] Can be used with MS495 up to 100 A



Coordination tables (SOC) >
For more examples of coordination visit the online tool for coordination with short circuit protection, overload protection and line contactor.

PSRC

Normal starts, class 10, in-line
Ordering details



PSRC3... PSRC16



PSRC25... PSRC30



PSRC37... PSRC45



PSRC60... PSRC105

Rated operational voltage U_e, 208...600 V AC, Rated control supply voltage, U_s, 100...240 V AC.

Motor power IEC data		Motor power UL/CSA data							
kW at 400V	Ie rated current	hp at 208V	hp at 480V	hp at 600V	FLA	Type	Order code	Net Weight (kg)	Net Weight (lb)
1.5	3.9	0.5	2	2	3.4	PSRC3-600-70	1SFA896203R7000	0.4	0.8
3	6.8	1	3	5	6.1	PSRC6-600-70	1SFA896204R7000	0.4	0.8
4	9	2	5	7.5	9	PSRC9-600-70	1SFA896205R7000	0.4	0.8
5.5	12	3	7.5	10	11	PSRC12-600-70	1SFA896206R7000	0.4	0.8
7.5	16	3	10	10	15	PSRC16-600-70	1SFA896207R7000	0.4	0.8
11	25	7.5	15	20	24	PSRC25-600-70	1SFA896208R7000	0.6	1.3
15	30	7.5	20	25	28	PSRC30-600-70	1SFA896209R7000	0.6	1.3
18.5	37	10	25	30	34	PSRC37-600-70	1SFA896210R7000	1.0	2.2
22	45	15	30	40	46.2	PSRC45-600-70	1SFA896211R7000	1.0	2.2
30	60	20	40	50	59.4	PSRC60-600-70	1SFA896212R7000	2.1	4.6
37	72	20	50	60	68	PSRC72-600-70	1SFA896213R7000	2.1	4.6
45	85	25	60	75	80	PSRC85-600-70	1SFA896214R7000	2.1	4.6
55	105	30	75	100	104	PSRC105-600-70	1SFA896215R7000	2.1	4.6

PSRC
Accessories



Connection kit
for PSRC3...16



Connection kit
for PSRC25...30



Connection kit
for PSRC37...45



Connection kit
for PSRC60...72

Connection kit

Article	breaker type	Type	Order code	Pkg qty	Net kg	lb
PSRC3...PSRC16	MS116/132	PSR16-MS116	1SFA896211R1001	1	0.03	0.08
PSRC25...PSRC30	MS132	PSR30-MS132	1SFA896212R1001	1	0.03	0.08
PSRC37...PSRC45	MS165	PSR45-MS165	1SFA896216R1001	1	0.05	0.11
PSRC60...PSRC72	MS165	PSR60-MS165	1SFA896215R1001	1	0.05	0.11
PSRC60...PSRC105	MS495	PSR105-MS495	1SAM501903R1001	1	0.03	0.08



Fan

Fan

Article	Type	Order code	Pkg qty	Net kg	lb
PSRC3...PSRC45	PSR-FAN3-45A	1SFA896311R1001	1	0.01	0.02
PSRC60...PSRC105	PSR-FAN60-105A	1SFA896313R1001	1	0.01	0.03



Terminal enlargements

Terminal enlargements

Article	Type	Order code	Pkg qty	Net kg	lb
PSRC60... PSRC105	PSLW-72	1SFA899002R1072	1	0.16	0.35

Note: Wire range mm^2 1 x 10...50 mm^2, 2 x 10...25 mm^2



Fieldbus plug adapter

Fieldbus plug adapter with cable

Article	Type	Order code	Pkg qty	Net kg	lb
Fieldbus plug adapter	PS-FBPA	1SFA896312R1002	1	0.05	0.11

PSRC
Technical data

Normal start													
In-line connected	**PSRC3**	**PSRC6**	**PSRC9**	**PSRC12**	**PSRC16**	**PSRC25**	**PSRC30**	**PSRC37**	**PSRC45**	**PSRC60**	**PSRC72**	**PSRC85**	**PSRC105**
IEC data													
(400 V) kW	1.5	3	4	5.5	7.5	11	15	18.5	22	30	37	45	55
Ie rated current	3.9	6.8	9	12	16	25	30	37	45	60	72	85	105
UL/CSA data													
(208 V) hp	0.5	1	2	3	3	7.5	7.5	10	15	20	20	25	30
(440-480 V) hp	2	3	5	7.5	10	15	20	25	30	40	50	60	75
(600 V) hp	2	5	7.5	10	10	20	25	30	40	50	60	75	100
FLA	3.4	6.1	9	11	15.2	24.2	28	34	46.2	59.4	68	80	104

Connectable cable area	**PSRC3...16**	**PSRC25... 30**	**PSRC37... 45**	**PSRC60...105**
Main circuit	1 x 0.75 - 2.5 mm2	1 x 2.5 - 10 mm2	1 x 6 - 35 mm2	1 x 10 - 95 mm2
	2 x 0.75 - 2.5 mm2	2 x 2.5 - 10 mm2	2 x 6 - 16 mm2	2 x 6 - 35 mm2
	1 x 14 AWG	1 x 12 - 8 AWG	1 x 8 - 4 AWG	1 x 6 - 2/0 AWG
Control circuit	**PSRC3...16**	**PSRC25... 105**		
	1 x 0.75 - 2.5 mm2	1 x 0.75 - 2.5 mm2		
	1 x 0.75 - 2.5 mm2	2 x 0.75 - 1.5 mm2		
	1 x 16 - 14 AWG / 2 x 16 AWG	1 x 16 - 14 AWG / 2 x 16 AWG		

Degree of protection	
main circuit	PSRC3... 30: IP20 PSRC37... 105: IP10
control circuit[1)]	PSRC3... 30: IP20

[1)] For supply circuit 6 A delayed, for MCB use C characteristics.

Signal relays	
For Run signal Resistive load	**PSRC3... 16** 240 V AC, 3 A / 24 V DC, 3 A **PSRC25... 105** 240 V AC, 3 A / 24 V DC, 3 A
AC-15 (Contactor)	**PSRC3... 16** 240 V AC, 0.5 A / 24 V DC 0.5 A **PSRC25... 105** 240 V AC, 0.5 A / 24 V DC, 0.5 A
For Top ramp signal	**PSRC25... 105**
Resistive load	240 V AC, 3 A / 24 V DC, 3 A
AC-15 (Contactor)	**PSRC25... 105** 240 V AC, 0.5 A / 24 V DC, 0.5 A
Rated insulation voltage Ui	600 V
Rated operational voltage Ue	208...600 V AC +10 %/-15 %, 50/60 Hz ±5 %
Rated control supply voltage Us	100...240 V AC, 50/60Hz ±5 %
Ambient temperature	
during operation	-25 ºC to + 60 ºC (-13 to + 140 ºF)[1)]
during storage	-40 ºC to + 70 ºC (-40 to +158 ºF)
Maximum altitude	4000 m (13123 ft)[2)]

[1)] Above 40 ºC (104 ºF) up to max. 60 ºC (140 ºF) reduce the rated current with 0.8 % per ºC (0.44 % per ºF).

[2)] When used at high alitudes above 1000 meters (3281 ft) up to 4000 meters (13123 ft) you need to derate the rated current using one of the following formulas.
[% of Ie = 100 - (x-1000)/150] x = actual altitude for the softstarter in meters. [% of Ie = 100 - (x-3280)/497] x = actual altitude for the softstarter in feet.

Number of starts per hour using PSRC softstarters

Starts/hour without auxiliary fan

Ie	**10**	**20**	**30**	**40**	**50**	**60**	**80**	**100**
3 A	PSRC3	PSRC3	PSRC3	PSRC3	PSRC3	PSRC3	PSRC3	PSRC6
6 A	PSRC6	PSRC6	PSRC6	PSRC6	PSRC6	PSRC9	PSRC9	PSRC9
9 A	PSRC9	PSRC9	PSRC9	PSRC12	PSRC12	PSRC12	PSRC16	PSRC25
12 A	PSRC12	PSRC12	PSRC12	PSRC16	PSRC25	PSRC25	PSRC30	PSRC30
16 A	PSRC16	PSRC25	PSRC25	PSRC25	PSRC30	PSRC30	PSRC37	PSRC37
25 A	PSRC25	PSRC30	PSRC37	PSRC37	PSRC37	PSRC45	PSRC45	PSRC60
30 A	PSRC30	PSRC37	PSRC37	PSRC45	PSRC45	PSRC60	PSRC60	PSRC72
37 A	PSRC37	PSRC45	PSRC45	PSRC60	PSRC60	PSRC72	PSRC85	PSRC105
45 A	PSRC45	PSRC45	PSRC60	PSRC60	PSRC72	PSRC85	PSRC105	-
60 A	PSRC60	PSRC60	PSRC72	PSRC85	PSRC105	PSRC105	-	-
72 A	PSRC72	PSRC85	PSRC105	PSRC105	-	-	-	-
85 A	PSRC85	PSRC105	PSRC105	-	-	-	-	-
105 A	PSRC105	-	-	-	-	-	-	-

Number of starts per hour using PSRC softstarters

Starts/hour with auxiliary fan

Ie	**10**	**20**	**30**	**40**	**50**	**60**	**80**	**100**
3 A	PSRC3	PSRC3	PSRC3	PSRC3	PSRC3	PSRC3	PSRC3	PSRC3
6 A	PSRC6	PSRC6	PSRC6	PSRC6	PSRC6	PSRC6	PSRC6	PSRC9
9 A	PSRC9	PSRC9	PSRC9	PSRC9	PSRC9	PSRC12	PSRC12	PSRC12
12 A	PSRC12	PSRC12	PSRC12	PSRC12	PSRC12	PSRC16	PSRC25	PSRC25
16 A	PSRC16	PSRC16	PSRC25	PSRC25	PSRC25	PSRC25	PSRC30	PSR30
25 A	PSRC25	PSRC2	PSRC30	PSRC37	PSRC37	PSRC37	PSRC37	PSRC45
30 A	PSRC30	PSRC30	PSRC37	PSRC37	PSRC45	PSRC45	PSRC45	PSRC45
37 A	PSRC37	PSRC37	PSRC45	PSRC45	PSRC45	PSRC45	PSRC60	PSRC60
45 A	PSRC45	PSRC45	PSRC45	PSRC60	PSRC60	PSRC60	PSRC72	PSRC72
60 A	PSRC60	PSRC60	PSRC60	PSRC72	PSRC72	PSRC85	PSRC105	-
72 A	PSRC72	PSRC72	PSRC72	PSRC85	PSRC105	PSRC105	-	-
85 A	PSRC85	PSRC85	PSRC105	PSRC105	-	-	-	-
105 A	PSRC105	PSRC105	-	-	-	-	-	-

Data based on an ambient temperature of 40° (104 F), starting current of 4 x Ie and ramp time 6 seconds. For more optimized selection or to use PSR for heavy-duty starts, please use the softstarter selection tool.

PSRC

Main dimensions mm, inches

PSRC3 ... PSRC16

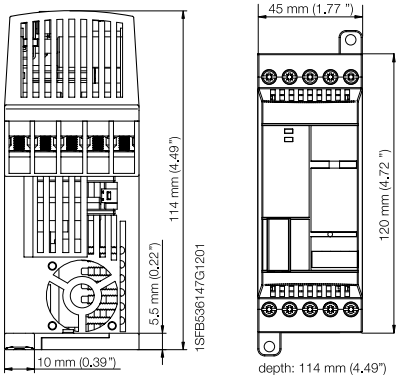

PSR25C ... PSRC30

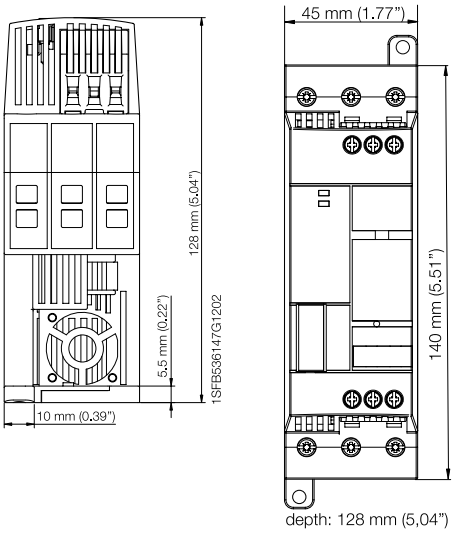

PSRC37 ... PSRC45

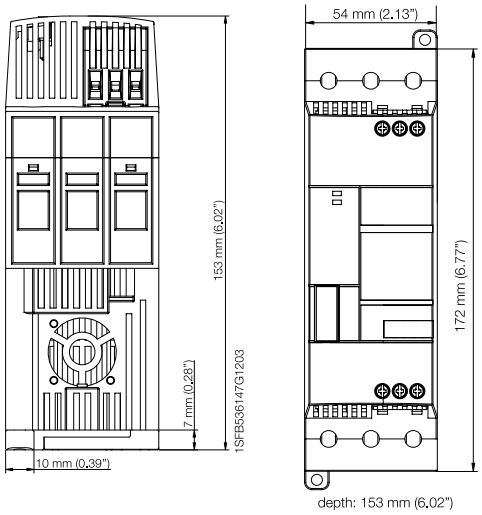

PSRC60 ... PSRC105

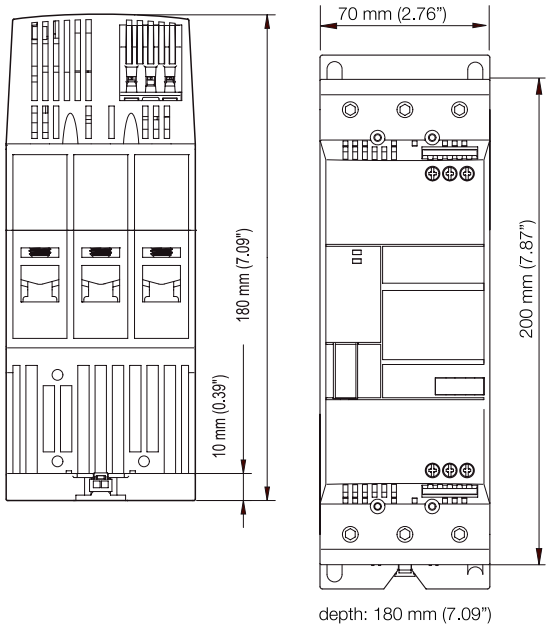

PSRC

Circuit diagrams

PSRC3 ... PSRC16

A) With MMS

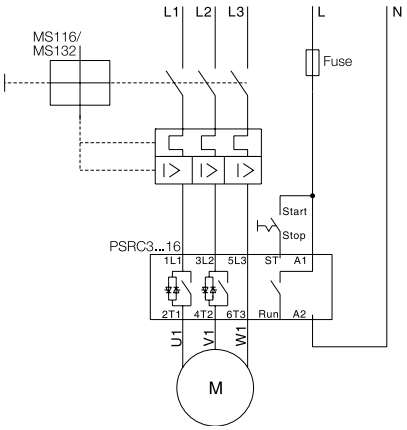

B) With MMS and auxiliary contact

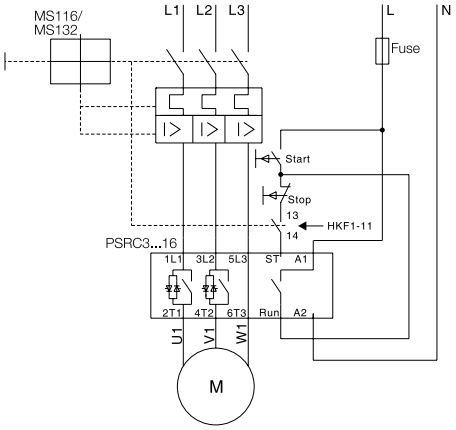

C) With fuses, contactor and O.L.

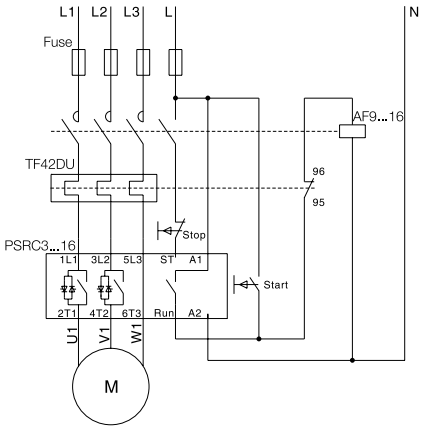

PSRC25 ... PSRC45

D) With MMS

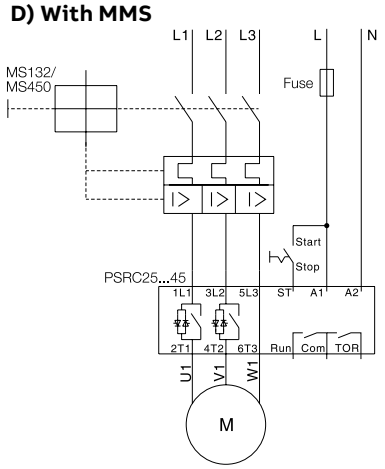

E) With MMS and auxiliary contact

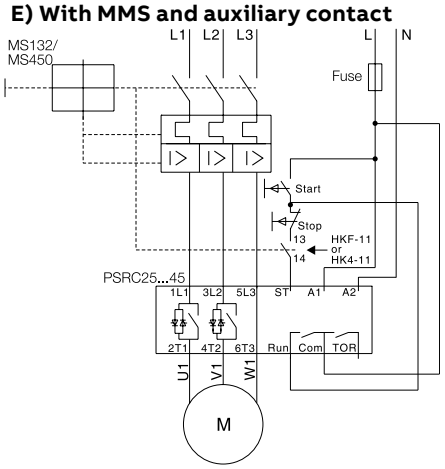

F) With fuses, contactor and O.L.

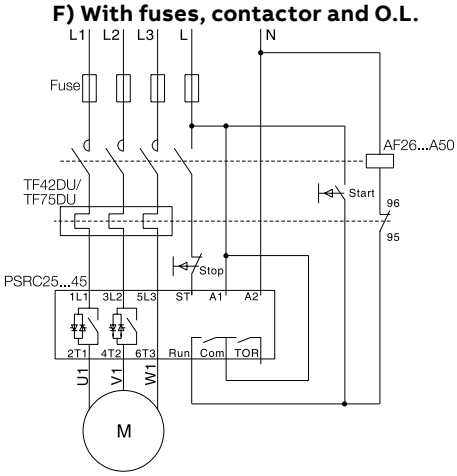

PSRC60 ... PSRC105

G) With MMS

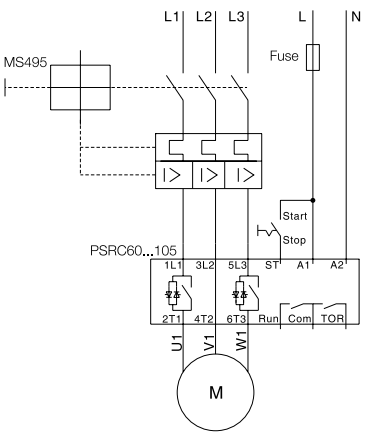

H) With MMS and auxiliary contact

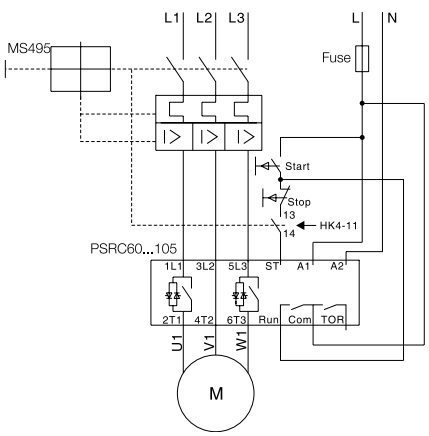

I) With fuses, contactor and O.L.

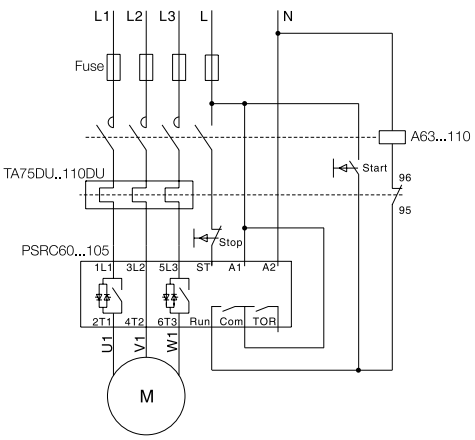

The PSE has been designed to meet the most common requirements from the water segment and is specialized on pump operation. It combines the requested protections with a very compact design and built-in bypass. Remote operation with external keypad or over fieldbus is available as an option.

PSE
The efficient range

42 **Introduction**

44 **Coordination examples**

45 **Ordering details**

46 **Accessories**

48 **Technical data**

50 **Dimensions**

51 **Circuit diagrams**

PSE - The efficient range
Introduction



Technical specifications
- Rated operational current: 18...370 A
- Operational voltage: 208...600 V AC
- Wide rated control supply voltage: 100...250 V AC, 50/60 Hz

Features
- Voltage ramp and torque control for both start and stop
- Two-phase controlled
- Current limit
- Kick-start
- Built-in bypass for energy saving and easy installation
- Illuminated display that uses symbols to become language neutral
- External keypad rated IP66 (Type 1, 4X,12) as an option
- Analog output for display of motor current

Protections
- Electronic overload protection
- Underload protection
- Locked rotor protection

Communication
- Built-in Modbus RTU
- Fieldbus communication with fieldbus plug adapter and fieldbus plug

---

SECURE MOTOR RELIABILITY

Basic motor protection and current limit
The PSE includes the most important protections for handling different load situations that can happen to pumps e.g. overload and underload. The current limit gives you more control of the motor during start and allows you to start your motor in weaker networks.

IMPROVE INSTALLATION EFFICIENCY

Saving time and money with built-in bypass and compact design
On the PSE, the bypass is built in and verified by ABB, saving you time during installation and space in your panel. The keypad is language neutral and illuminated for easy set-up and operation in field. The compact design makes installation fast and easy.

INCREASE APPLICATION PRODUCTIVITY

Torque control for elimination of water hammering in pumps
Torque control is the most efficient way to stop a full speed pump. The PSE has a special torque stop ramp that is designed together with a pump manufacturer to eliminate water hammering in an optimal way.



Screw mounting PSE is fast easy to install by using screw mounting.

Digital input for start, stop and reset PSE is controlled through digital inputs using the internal 24 V DC source. This allows easy control with e.g. push buttons or relays.

Output signal relays for run, top of ramp and event Three output signal relays for indicating that the motor is running, that the softstarter is in top of ramp and if any event has happened. The relays can be used e.g. with pilot lights or to control a line contactor.

Coated circuit boards protecting from dust, moist and corrosive atmosphere.

Modbus- RTU fieldbus communication for monitoring and control. Support for all major communication protocols.

Torque control function the absolutely best possible stop of pumps without water hammering and pressure surges.

PSE display

Illuminated and language-neutral display with icons The display on PSE uses icons for fast and easy set-up of parameters. Each icon indicates a different parameter to set and makes navigation and setting of parameters easy.

LED indicators

- Green ready LED
  Flashing - Control supply
  Steady - Main power available
- Green run LED
  Flashing - Ramping up/down
  Steady - TOR
- Yellow protection LED
- Red fault LED

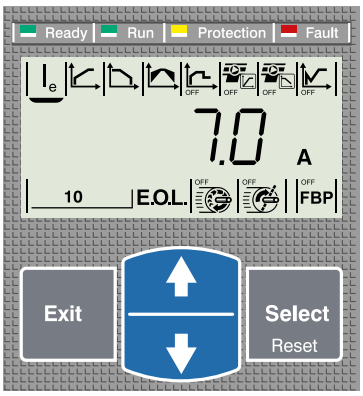

PSE - The efficient range

Coordination examples



PSE18 ... PSE105



PSE142 ... PSE170



PSE210 ... PSE370

Normal start In-line connected

	Technical data				Using MCCB only, type 1 coordination will be achieved [1] MCCB (400 V, 40 ºC)		To achieve type 2 coordination, semi-conductor fuses must be used [1]	Suitable switch fuse for recommended semi-conductor fuses [1]	The line contactor is not required for the softstarter itself but often used to open if OL trips [1]
Softstarter	IEC kW (400V)	IEC max A	UL HP (440-480 V)	UL max FLA	MCCB (35 kA)	MCCB (50 kA)	Fuse protection (85 kA), Semiconductor fuses, Bussmann	Switch fuse	Line contactor
PSE18	7.5	18	10	18	XT2N160	XT2S160	170M1563	OS32GD	AF26
PSE25	11	25	15	25	XT2N160	XT2S160	170M1564	OS32GD	AF26
PSE30	15	30	20	28	XT2N160	XT2S160	170M1566	OS32GD	AF30
PSE37	18.5	37	25	34	XT2N160	XT2S160	170M1567	OS63GD	AF38
PSE45	22	45	30	42	XT2N160	XT2S160	170M1568	OS63GD	AF52
PSE60	30	60	40	60	XT2N160	XT2S160	170M1569	OS63GD	AF65
PSE72	37	72	50	68	XT2N160	XT2S160	170M1571	OS125GD	AF80
PSE85	45	85	60	80	XT2N160	XT2S160	170M1572	OS125GD	AF96
PSE105	55	106	75	104	XT3N250	XT3S250	170M3819	OS250D	AF116
PSE142	75	143	100	130	XT3N250	XT3S250	170M5809	OS400D	AF146
PSE170	90	171	125	169	XT3N250	XT3S250	170M5810	OS400D	AF190
PSE210	110	210	150	192	XT4N320	XT4S320	170M5812	OS400D	AF265
PSE250	132	250	200	248	XT5N400	XT5S400	170M5813	OS400D	AF265
PSE300	160	300	250	302	XT5N400	XT5S400	170M6812	OS630D	AF305
PSE370	200	370	300	361	XT5N630	XT5S630	170M6813	OS630D	AF370

[1] These are an example of coordination. For more examples see: https://applications.it.abb.com/SOC/Page/Selection.aspx



Coordination tables (SOC) >

For more examples of coordination visit the online tool for coordination with short circuit protection, overload protection and line contactor.

PSE - The efficient range

Ordering details

NOTE

PSE range updates (2018)
- Built in Modbus-RTU communication protocol added
- Increased firmware & hardware stability and reliability
- Improved package and inlay

PSE frame C updates (2018)
PSE210..PSE370 redesigned with more compact size and have new order codes replacing existing PSE Frame C that will be phased out. Terminal extension kit available as accessory for retro-fit.



PSE18 ... PSE105



PSE142 ... PSE170



PSE210 ... PSE370

Normal starts, class 10, in-line Rated operational voltage U_e, 208-600 V, Rated control supply voltage U_s, 100-250 V AC, 50/60 Hz

IEC rated operational power			current	UL/CSA rated operational power								
230V Pe kW	400V Pe kW	500V Pe kW	Ie A	200/208V Pe hp	220/240V Pe hp	440/480V Pe hp	550/600V Pe hp	FLA	Type	Order code	Net Weight (kg)	Net Weight (lb)
4	7.5	11	18	5	5	10	15	18	PSE18-600-70	1SFA897101R7000	2.5	5.5
5.5	11	15	25	7.5	7.5	15	20	25	PSE25-600-70	1SFA897102R7000	2.5	5.5
7.5	15	18.5	30	7.5	10	20	25	28	PSE30-600-70	1SFA897103R7000	2.5	5.5
9	18.5	22	37	10	10	25	30	34	PSE37-600-70	1SFA897104R7000	2.5	5.5
11	22	30	45	10	15	30	40	42	PSE45-600-70	1SFA897105R7000	2.5	5.5
15	30	37	60	20	20	40	50	60	PSE60-600-70	1SFA897106R7000	2.5	5.5
18.5	37	45	72	20	25	50	60	68	PSE72-600-70	1SFA897107R7000	2.5	5.5
22	45	55	85	25	30	60	75	80	PSE85-600-70	1SFA897108R7000	2.6	5.7
30	55	75	106	30	40	75	100	104	PSE105-600-70	1SFA897109R7000	2.9	6.3
40	75	90	143	40	50	100	125	130	PSE142-600-70	1SFA897110R7000	4.4	9.7
45	90	110	171	60	60	125	150	169	PSE170-600-70	1SFA897111R7000	4.4	9.7
59	110	132	210	60	75	150	200	192	PSE210-600-70-1	1SFA897112R7001	8.5	18.7
75	132	160	250	75	100	200	250	248	PSE250-600-70-1	1SFA897113R7001	10.6	23.3
90	160	200	300	100	100	250	300	302	PSE300-600-70-1	1SFA897114R7001	10.6	23.3
110	200	250	370	125	150	300	350	361	PSE370-600-70-1	1SFA897115R7001	10.6	23.3

Heavy-duty starts, class 30, in-line Rated operational voltage U_e, 208...600 V, Rated control supply voltage U_s, 100...250 V AC, 50/60 Hz

IEC rated operational power			current	UL/CSA rated operational power								
230V Pe kW	400V Pe kW	500V Pe kW	Ie A	200/208V Pe hp	220/240V Pe hp	440/480V Pe hp	550/600V Pe hp	FLA	Type	Order code	Net Weight (kg)	Net Weight (lb)
3	5.5	7.5	12	3	3	7.5	10	11	PSE18-600-70	1SFA897101R7000	2.5	5.5
4	7.5	11	18	5	5	10	15	18	PSE25-600-70	1SFA897102R7000	2.5	5.5
5.5	11	15	25	7.5	7.5	15	20	25	PSE30-600-70	1SFA897103R7000	2.5	5.5
7.5	15	18.5	30	7.5	10	20	25	28	PSE37-600-70	1SFA897104R7000	2.5	5.5
9	18.5	22	37	10	10	25	30	34	PSE45-600-70	1SFA897105R7000	2.5	5.5
11	22	30	45	10	15	30	40	42	PSE60-600-70	1SFA897106R7000	2.5	5.5
15	30	37	60	20	20	40	50	60	PSE72-600-70	1SFA897107R7000	2.5	5.5
18.5	37	45	72	20	25	50	60	68	PSE85-600-70	1SFA897108R7000	2.6	5.7
22	45	55	85	25	30	60	75	80	PSE105-600-70	1SFA897109R7000	2.9	6.3
30	55	75	106	30	40	75	100	104	PSE142-600-70	1SFA897110R7000	4.4	9.7
40	75	90	143	40	50	100	125	130	PSE170-600-70	1SFA897111R7000	4.4	9.7
45	90	110	171	60	60	125	150	169	PSE210-600-70-1	1SFA897112R7001	8.5	18.7
59	110	132	210	60	75	150	200	192	PSE250-600-70-1	1SFA897113R7001	10.6	23.3
75	132	160	250	75	100	200	250	248	PSE300-600-70-1	1SFA897114R7001	10.6	23.3
90	160	200	300	100	100	250	300	302	PSE370-600-70-1	1SFA897115R7001	10.6	23.3

PSE - The efficient range

Accessories



Cable connectors for CU cables

Cable connectors for Cu cables

Article	Wire range mm²	Tightening torque max Nm	Type	Order code	Pkg qty	Net kg	lb
PSE142 ... PSE170	6...120	14	KIT FC Cu XT4 3pcs	1SDA066917R1	3	0.18	0.40
PSE142 ... PSE170	2 x (50...120)	16	LZ185-2C/120	1SFN074709R1000	3	0.10	0.22
PSE210 ... PSE370	16...300	25	T5 400 3pcs	1SDA055016R1	3	0.39	0.45



Cable connectors for CU & AL cables

Cable connectors for Al and Cu cables

Article	Wire range mm²	Tightening torque max Nm	Type	Order code	Pkg qty	Net kg	lb
PSE142 ... PSE170	95...185	31	KIT FC CuAl T4 3pcs	1SDA054988R1	3	0.14	0.31
PSE210 ... PSE370	185...240	43	KIT FC CuAl T5 400 3pcs	1SDA055020R1	3	0.24	0.54

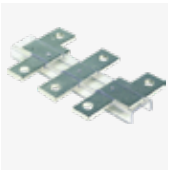

Terminal enlargements

Terminal enlargements

Article	Dimensions hole ø mm²	bar mm²	Type	Order code	Pkg qty	Net kg	lb
PSE18 ... PSE105	6.5	15 x 3	LW110	1SFN074307R1000	1	0.07	0.14
PSE142 ... PSE170	10.5	17.5 x 5	LW185	1SFN074707R1000	1	0.29	0.64
PSE210 ... PSE370	10.5	20 x 5	LW300	1SFN075107R1000	1	0.49	1.08



Terminal kit

Terminal kit

Article	Type	Order code	Pkg qty	Net kg	lb
PSE142...PSE170	PSLE-185	1SFA899221R1002	1	0.34	0.75
PSE210...370	PSLE-300	1SFA899221R1003	1	0.30	0.66



Terminal extension

Terminal extension

Article	Type	Order code	Pkg qty	Net kg	lb
PSE142 ... PSE170 8.5 17.5 x 5	LX205	1SFN074810R1000	1	0.25	0.55
PSE210 ... PSE370 10.5 20 x 5	LX370	1SFN075410R1000	1	0.35	0.77

PSE - The efficient range
Accessories



Terminal shrouds

Terminal shrouds

Article	Type	Order code	Pkg qty	Net kg	lb
PSE18... PSE105, Screw terminals	LT140-30L	1SFN124203R1000	2	0.07	0.15
PSE142... PSE170, short for use with cable clamps	LT185-AC	1SFN124701R1000	2	0.05	0.11
PSE142... PSE170,long for use with compression lugs	LT185-AL	1SFN124703R1000	2	0.22	0.49
PSE210... PSE370, short for use with cable clamps	LT300-AC	1SFN125101R1000	2	0.09	0.19
PSE210... PSE370, long for use with compression lugs	LT300-AL	1SFN125103R1000	2	0.28	0.62



External keypad

External keypad including a 3m cable

Article	Type	Order code	Pkg qty	Net kg	lb
PSE18 ... PSE370	PSEEK	1SFA897100R1001	1	0.13	0.29



USB cable

USB cable for Service Engineer Tool

Article	Type	Order code	Pkg qty	Net kg	lb
PSE18 ... PSE370	PSECA	1SFA897201R1001	1	0.10	0.22



Fieldbus plug adaptor

Fieldbus plug connection, cable included

Article	Type	Order code	Pkg qty	Net kg	lb
Fieldbus plug adaptor	PS-FBPA	1SFA896312R1002	1	0.15	0.33



Terminal extensions retrofit kit

Terminal extensions retrofit kit

Article	Type	Order code	Pkg qty	Net kg	lb
Terminal extensions retrofit kit	LXR370	1SFA899222R1003	1	0.45	0.99



Modbus adapter

Modbus adapter

Article	Type	Order code	Pkg qty	Net kg	lb
Modbus adapter	PS-MBIA	1SFA899300R1020	1	0.01	0.02

PSE - The efficient range

Technical data

Technical data	PSE18 ... PSE370
Rated insulation voltage U_i	600 V
Rated operational voltage U_e	208...600 V +10%/-15%
Rated control supply voltage U_s	100...250 V +10%/-15%, 50/60 Hz ±10 %
Rated control circuit voltage U_c	Internal 24 V DC
Starting capacity at I_e	4 x I_e for 10 sec.
Number of starts per hour	10 [1]
Maximum Altitude	4000 m (13123 ft) [3]
Overload capability	
Overload class	10
Ambient temperature	
During operation	-25...+60 °C (-13...+140 F) [2]
During storage	-40...+70 °C (-40...+158 F)
Degree of protection	
Main circuit	IP00
Supply and control circuit	IP20
Main circuit	
Built-in bypass	Yes
Cooling system	fan cooled (thermostat controlled)
HMI for settings	
Display	4 7-segments and icons. Illuminated
Keypad	2 selection keys and 2 navigation keys
Main settings	
Setting current	Size dependent
Ramp time during start	1...30 sec
Ramp time during stop	0...30 sec
Initial/end voltage	30...70%
Current limit	1.5...7 x I_e
Torque control for start	Yes / No
Torque control for stop	Yes / No
Kick start	Off, 30...100%
Signal relays	
Number of signal relays	3
K2	Run signal
K3	TOR (bypass) signal
K1	Event signal
Rated operational voltage U_e	100-250 V AC/24 V DC [4]
Rated thermal current I_{th}	3 A
Rated operational current I_e at AC-15 (U_e = 250 V)	1.5 A
Vibration test	
According to IEC 60068-2-6:2007	

Technical data	PSE18 ... PSE370
Analog output	
Output signal reference	4...20 mA
Type of output signal	I Amp
Scaling	Fixed at 1.2 x I_e
Control circuit	
Number of inputs	3 (start, stop, reset of faults)
Signal indication LED	
On / Ready	Green flashing / steady
Run / TOR	Green flashing / steady
Protection	Yellow
Fault	Red
Protections	
Electronic overload	Yes (Class 10A, 10, 20, 30)
Locked rotor protection	Yes
Underload protection	Yes
Fieldbus connection	
ABB Fieldbus plug	Yes (option)
Built-in modbus	Yes
External keypad	
Display	LCD type
Ambient temperature	
During operation	-25...+60 ºC (-13...+140 F)
During storage	-40...+70 ºC (-40...+158 F)
Degree of protection	IP66

[1] Valid for 50% on time and 50% off time. If other data is required, contact your local ABB office.
[2] Above 40 ºC (104 F) up to max. 60 ºC (140 F) reduce the rated current with 0.6% per ºC (0,33% per F).
[3] When used at high altitudes, above 1000 meters (3281 ft) up to 4000 meters (13123 ft), de-rate the rated current using the following formula. [% of Ie = 100 - $\frac{x - 1000}{150}$] x = actual altitude of the softstarter in meters.
[4] A common voltage needs to be used for all 3 signal relays.

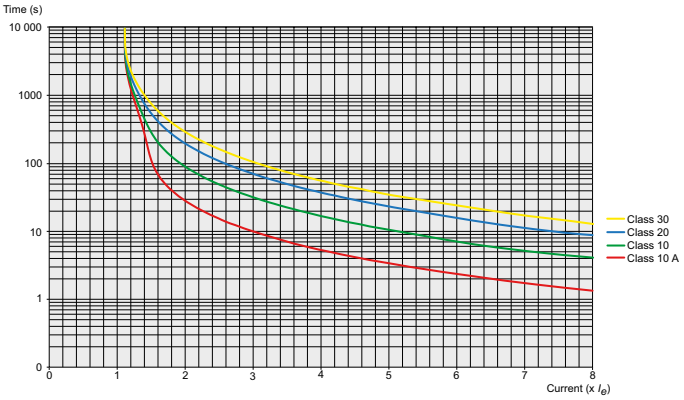

Tripping curves for the integrated electronic overload protection
PSE has an integrated electronic overload protection that can be set to four different tripping classes. Below you find a curve for each tripping class in cold state.
See page 66 for bigger picture.

PSE - The efficient range

Technical data

Main terminals

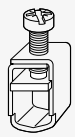

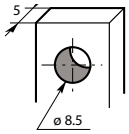

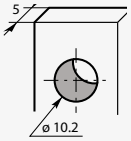

Article	PSE18… 105	PSE142… 170	PSE210… 370
Cu cable - Flexible 1 x mm²	2.5…70 mm²	6…120 mm²	16…300 mm²
Clamp type	Included	1SDA066917R1	1SDA055016R1
Tightening torque	8 Nm	14 Nm	25 Nm
Cu cable - Flexible 2 x mm²	2.5…70 mm²	50…120 mm²	-
Clamp type	Included	1SFN074709R1000	-
Tightening torque	8 Nm	16 NM	-
Cu cable - Stranded 1 x mm²	2.5…70 mm²	6…120 mm²	16…300 mm²
Clamp type	Included	1SDA066917R1	1SDA055016R1
Tightening torque	8 Nm	14 Nm	25 Nm
Cu cable - Stranded 2 x mm²	2.5…70 mm²	50…120 mm²	-
Clamp type	Included	1SFN074709R1000	-
Tightening torque	8 Nm	16 NM	-
Al cable - Stranded 1 x mm²	-	95…185 mm²	185…240
Clamp type	-	1SDA054988R1	1SDA055020R1
Tightening torque	-	31 Nm	43 Nm
Lugs			
Width	22 mm (0.866 in)	24 mm (0.945 in)	30 mm (1.181 in)
Diameter>=	6.5 mm (0.256 in)	8.5 mm (0.335 in)	10.2 mm (0.402 in)
Tightening torque	9 Nm (80 in lb)	18 Nm (159 in lb)	28 Nm (248 in lb)
Connection capacity acc to UL/CSA 1 x AWG/kcmil	6…2/0	6…300 kcmil	4…400 kcmil
Clamp type	Included	ATK185	ATK300
Tightening torque	71 in lb	300 in lb	375 in lb
Connection capacity acc to UL/CSA 2 x AWG/kcmil	-	-	4…500 kcmil
Clamp type	-	-	ATK300/2
Tightening torque	-	-	375 in lb
Supply and control circuit			
Cu cable - Stranded 1 x mm²	0.75…2.5 mm² (19…14 AWG)		
Cu cable - Stranded 2 x mm²	0.75…1.5 mm² (19…16 AWG)		
Tightening torque	0.5 Nm (4.4 in lb)		

Fuse ratings and power losses

	Current range	Max power loss at rated I_e	Max fuse raiting - main circuit [1] Bussmann fuses, DIN43 620 (Knife)			Power requirements supply circuit Holding (VA) / Pull-in (VA)
Softstarter	**A**	**W**	**A**	**Type**	**Size**	
PSE18	5.4…18.0	0.2	40	170M1563	000	16/19.9
PSE25	7.5…25.0	0.4	50	170M1564	000	16/19.9
PSE30	9.0…30.0	0.5	80	170M1566	000	16/19.9
PSE37	11.1…37.0	0.8	100	170M1567	000	16/19.9
PSE45	13.5…45.0	1.2	125	170M1568	000	16/19.9
PSE60	18.0…60.0	2.2	160	170M1569	000	16/19.9
PSE72	21.6…72.0	3.1	250	170M1571	000	16/19.9
PSE85	25.5…85.0	4.3	315	170M1572	000	16/19.9
PSE105	31.8…106.0	6.6	400	170M3819	1*	16/19.9
PSE142	42.9…143.0	12.1	450	170M5809	2	16/31
PSE170	51.3…171.0	17.6	500	170M5810	2	16/31
PSE210	63.0…210.0	8.8	630	170M5812	2	21/244
PSE250	75.0…250.0	12.5	700	170M5813	2	21/244
PSE300	90.6…302.0	18.0	800	170M6812	3	21/244
PSE370	111.0…370.0	27.4	900	170M6813	3	21/244

[1] For the supply circuit 6 A delayed, for MCB use C characteristics.

PSE - The efficient range

Dimensions

PSE18... 105

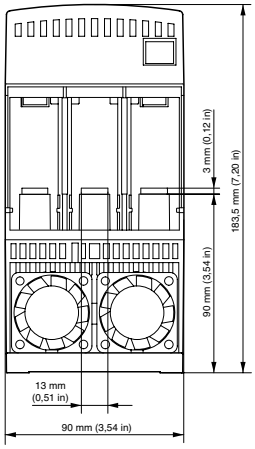

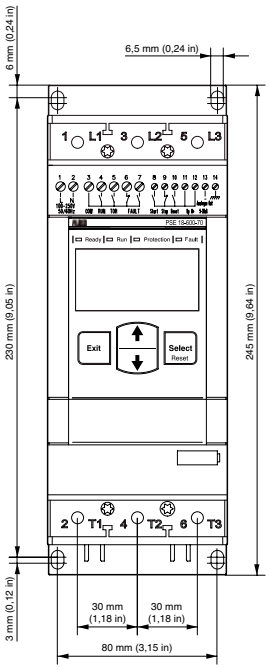

PSE142... 170

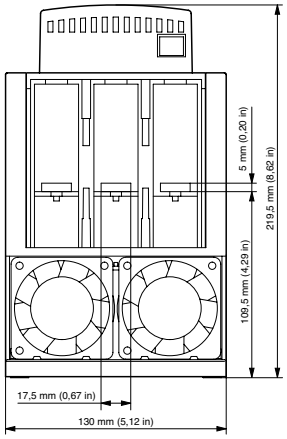

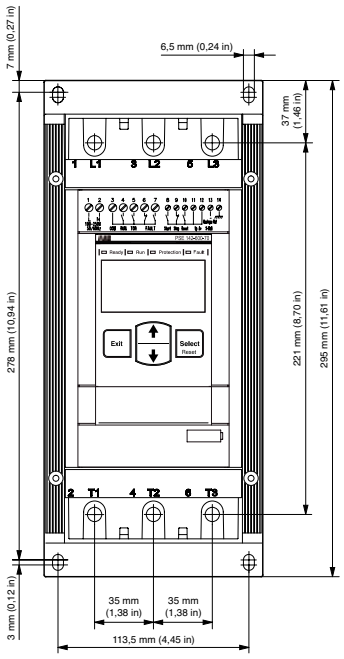

PSE210... 370

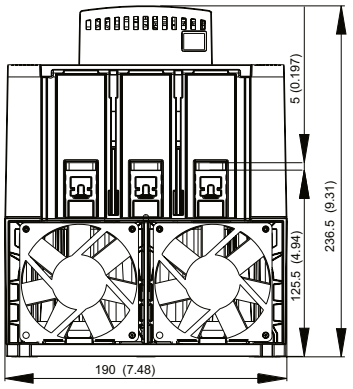

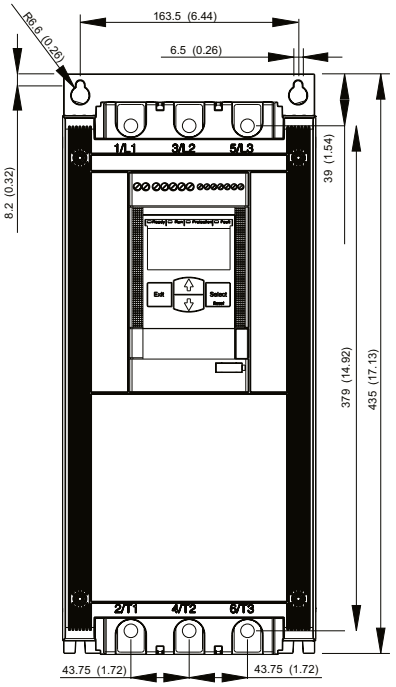

External keypad (PSEEK)

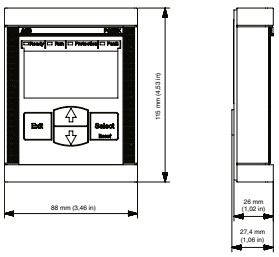

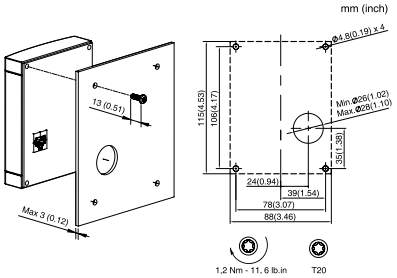

PSE - The efficient range

Circuit diagrams

PSE18... 370
With MCCB and line contactor

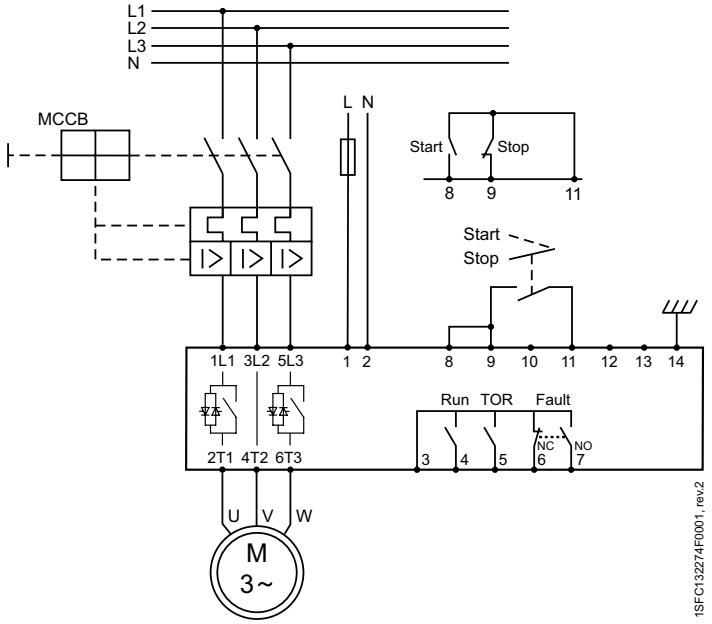

With fuses and line contactor

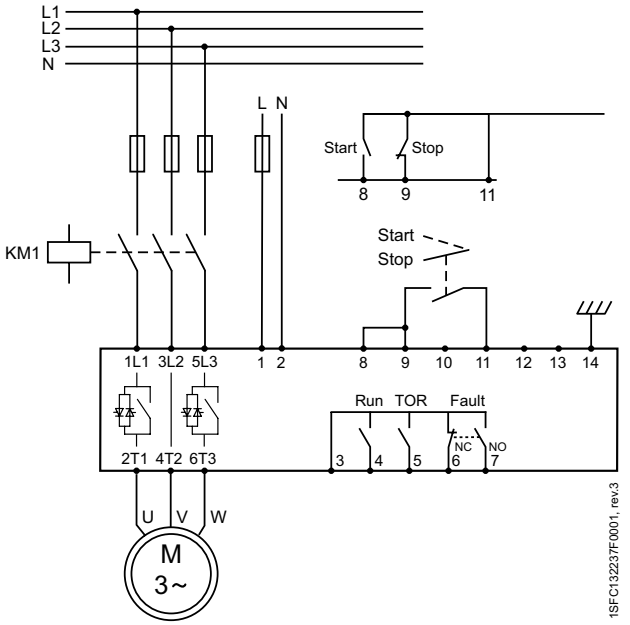

For more circuit diagrams see **solutions.abb/softstarters**

The PSTX combines many years of research and product development with extensive knowledge of application specific requirements and needs. It is our latest advancement in motor control & protection, and it adds new functionality and increased reliability.

PSTX
The advanced range

54 **Introduction**

56 **Coordination examples**

58 **Ordering details**

62 **Accessories**

64 **Technical data**

68 **Dimensions**

70 **Cicuit diagrams**

PSTX - The advanced range
Introduction



Technical specifications
- Rated operational current: 30... 1250 A (inside-delta: 2160 A)
- Operational voltage: 208... 690 V AC
- Wide rated control supply voltage: 100... 250 V, 50/60 Hz

Features
- Both in-line and inside-delta connection
- Detachable keypad rated IP66 (4X outdoor)
- Graphical display with 17 languages for easy setup and operation
- Built-in bypass for energy saving and easy installation
- Analog output for measurement of current, voltage, power factor etc.

Protections
- Complete motor protection

Communication
- Built-in Modbus RTU
- Support for all major communication protocols

SECURE MOTOR RELIABILITY

Complete motor protection
The PSTX offers complete motor protection in only one unit and is able to handle both load and network irregularities. PT-100, earth fault protection and over/ under voltage protection along with many other functions keep your motor safer than ever. PSTX also offers three types of current limit: standard, dual and ramp. This gives you full control of your motor during start. It also allows you to use your motor in weaker networks.

IMPROVE INSTALLATION EFFICIENCY

Built-in bypass saves time and energy
When reaching full speed, the PSTX will activate its bypass. This saves energy while reducing the softstartes heat generation. On the PSTX, the bypass is built in and verified by ABB, saving you time during installation and space in your panel.

INCREASE APPLICATION PRODUCTIVITY

Complete control of pumps
Time to use your processes to their full potential. The PSTX features many application enhancing features, including torque control: the most efficient way to start and stop pumps. The pump cleaning feature can reverse pump flow and clean out pipes, securing uptime of your pump system.

Heavy duty design to handle heavy applications such as centrifugal fan, mill and mixers.

Jog with slow speed forward & reverse
The slow speed forward and backward jog feature will make you more flexible when operating e.g. conveyor belts and cranes.

Torque control function the absolutely best possible stop of pumps without water hammering and pressure surges.



The HMI is user-friendly and have a clear display that saves you time and resources during both setup and operation. The detachable keypad is standard on all PSTX softstarters with IP66 and 4x outdoor for tough environments.

Coated PCB protecting from dust, moist and corrosive atmosphere.

Customize your own specific home screens (up to seven different). The PSTX has 17 pre-installed languages. You can use your customized home screens to show status information important to your process and hide information that is not.

Detachable keypad as standard. It can be placed on your panel door, meaning you do not have to interrupt your process in order to read status information or to change settings.



Easy to learn with a large graphical display along with built-in assistants make learning how to handle the PSTX fun and simple. The interface resembles other interfaces from ABB which will streamline and help with training of field personnel.

PSTX - The advanced range

Coordination examples


PSTX30... PSTX105


PSTX142... PSTX170


PSTX210... PSTX370


PSTX470... PSTX570


PSTX720... PSTX840


PSTX1050... PSTX1250

Normal start In-line connected

	Technical data				Using manual motor starter or MCCB, type 1 coordination will be achieved.[1)]	Using gG fuses, type 1 coordination will be achieved. To achieve type 2 coordination, semiconductor fuses must be used.[1)]	Suitable switch fuse for the recommended semiconductor fuses. [1)]	The line contactor is not required for the softstarter itself but often used to open if OL trips [1)]
Softstarter	IEC kW (400V)	IEC max A	UL HP (440-480 V)	UL max FLA	MCCB (50 kA) 400 V, 40 ºC	Fuse protection (80 kA), Semiconductor fuses, Bussmann	Switch fuse	Line contactor
PSTX30	15	30	20	28	XT2S160	170M1567	OS32G	AF30
PSTX37	18.5	37	25	34	XT2S160	170M1568	OS63G	AF38
PSTX45	22	45	30	42	XT2S160	170M1569	OS63G	AF52
PSTX60	30	60	40	60	XT2S160	170M1569	OS63G	AF65
PSTX72	37	72	50	68	XT2S160	170M1571	OS125G	AF80
PSTX85	45	85	60	80	XT2S160	170M1572	OS125G	AF96
PSTX105	55	106	75	104	XT2S160	170M3819	OS250	AF116
PSTX142	75	143	100	130	XT2S160	170M5810	OS400	AF146
PSTX170	90	171	125	169	XT4S250	170M5812	OS400	AF190
PSTX210	110	210	150	192	T4S320	170M5812	OS400	AF265
PSTX250	132	250	200	248	T5S400	170M5813	OS400	AF265
PSTX300	160	300	250	302	T5S400	170M6812	OS630	AF305
PSTX370	200	370	300	361	T5S630	170M6813	OS630	AF370
PSTX470	250	470	400	480	T7S800	170M6813	OS630	AF580
PSTX570	315	570	500	590	T7S800	170M6814	OS630	AF580
PSTX720	400	720	600	720	T7S1250	170M8554	OS800	AF750
PSTX840	450	840	700	840	T7S1250	170M6018	-	AF1350
PSTX1050	560	1050	900	1062	E2.2N 2000	170M6020	-	AF1650
PSTX1250	710	1250	1000	1250	E2.2N 2000	170M6021	-	-

[1)] These is an example of coordination. For more examples see: https://applications.it.abb.com/SOC/Page/Selection.aspx
[2)] When using a softstarter in a network with high harmonic disturbances, we recommend to use a line-contactor. Please check the information in the Installation manual for more details.



Coordination tables (SOC) >
For more examples of coordination visit the online tool for coordination with short circuit protection, overload protection and line contactor.



PSTX - The advanced range

Normal starts, class 10, in-line

Ordering details



PSTX30... PSTX105



PSTX142... PSTX170



PSTX210... PSTX370



PSTX470... PSTX570



PSTX720... PSTX840



PSTX1050... PSTX1250

Rated operational voltage U_e, 208...600 V , rated control supply voltage U_s, 100...250 V AC, 50/60 Hz

IEC rated operational power			current	UL/CSA rated operational power								
400V Pe kW	500V Pe kW	690V Pe kW	Ie A	200/208V Pe hp	220/240V Pe hp	440/480V Pe hp	550/600V Pe hp	FLA	Type	Order code	Net Weight (kg)	Net Weight (lb)
15	18.5	-	30	7.5	10	20	25	28	PSTX30-600-70	1SFA898103R7000	4.6	10.1
18.5	22	-	37	10	10	25	30	34	PSTX37-600-70	1SFA898104R7000	4.6	10.1
22	25	-	45	10	15	30	40	42	PSTX45-600-70	1SFA898105R7000	4.6	10.1
30	37	-	60	20	20	40	50	60	PSTX60-600-70	1SFA898106R7000	4.6	10.1
37	45	-	72	20	25	50	60	68	PSTX72-600-70	1SFA898107R7000	4.7	10.4
45	55	-	85	25	30	60	75	80	PSTX85-600-70	1SFA898108R7000	4.7	10.4
55	75	-	106	30	40	75	100	104	PSTX105-600-70	1SFA898109R7000	4.7	10.4
75	90	-	143	40	50	100	125	130	PSTX142-600-70	1SFA898110R7000	7.0	15.4
90	110	-	171	50	60	125	150	169	PSTX170-600-70	1SFA898111R7000	8.9	19.6
110	132	-	210	60	75	150	200	192	PSTX210-600-70	1SFA898112R7000	13.3	29.3
132	160	-	250	75	100	200	250	248	PSTX250-600-70	1SFA898113R7000	15.5	34.2
160	200	-	300	100	100	250	300	302	PSTX300-600-70	1SFA898114R7000	15.5	34.2
200	257	-	370	125	150	300	350	361	PSTX370-600-70	1SFA898115R7000	15.5	34.2
250	315	-	470	150	200	400	500	480	PSTX470-600-70	1SFA898116R7000	25.0	55.1
315	400	-	570	200	200	500	600	590	PSTX570-600-70	1SFA898117R7000	27.0	59.5
400	500	-	720	250	300	600	700	720	PSTX720-600-70	1SFA898118R7000	46.5	102.5
450	600	-	840	300	350	700	800	840	PSTX840-600-70	1SFA898119R7000	46.5	102.5
560	730	-	1050	400	450	900	1000	1062	PSTX1050-600-70	1SFA898120R7000	62.3	137.3
710	880	-	1250	400	500	1000	1200	1250	PSTX1250-600-70	1SFA898121R7000	63.3	137.3

Rated operational voltage U_e, 208...690 V , rated control supply voltage U_s, 100...250 V AC, 50/60 Hz

IEC rated operational power			current	UL/CSA rated operational power								
400V Pe kW	500V Pe kW	690V Pe kW	Ie A	200/208V Pe hp	220/240V Pe hp	440/480V Pe hp	550/600V Pe hp	FLA	Type	Order code	Net Weight (kg)	Net Weight (lb)
15	18.5	25	30	7.5	10	20	25	28	PSTX30-690-70	1SFA898203R7000	4.6	10.1
18.5	22	30	37	10	10	25	30	34	PSTX37-690-70	1SFA898204R7000	4.6	10.1
22	25	37	45	10	15	30	40	42	PSTX45-690-70	1SFA898205R7000	4.6	10.1
30	37	55	60	20	20	40	50	60	PSTX60-690-70	1SFA898206R7000	4.6	10.1
37	45	59	72	20	25	50	60	68	PSTX72-690-70	1SFA898207R7000	4.7	10.4
45	55	75	85	25	30	60	75	80	PSTX85-690-70	1SFA898208R7000	4.7	10.4
55	75	90	106	30	40	75	100	104	PSTX105-690-70	1SFA898209R7000	4.7	10.4
75	90	132	143	40	50	100	125	130	PSTX142-690-70	1SFA898210R7000	7.0	15.4
90	110	160	171	50	60	125	150	169	PSTX170-690-70	1SFA898211R7000	8.9	19.6
110	132	184	210	60	75	150	200	192	PSTX210-690-70	1SFA898212R7000	13.3	29.3
132	160	220	250	75	100	200	250	248	PSTX250-690-70	1SFA898213R7000	15.5	34.2
160	200	257	300	100	100	250	300	302	PSTX300-690-70	1SFA898214R7000	15.5	34.2
200	257	355	370	125	150	300	350	361	PSTX370-690-70	1SFA898215R7000	15.5	34.2
250	315	450	470	150	200	400	500	480	PSTX470-690-70	1SFA898216R7000	25.0	55.1
315	400	560	570	200	200	500	600	590	PSTX570-690-70	1SFA898217R7000	27.0	59.5
400	500	710	720	250	300	600	700	720	PSTX720-690-70	1SFA898218R7000	46.5	102.5
450	600	800	840	300	350	700	800	840	PSTX840-690-70	1SFA898219R7000	46.5	102.5
560	730	1000	1050	400	450	900	1000	1062	PSTX1050-690-70	1SFA898220R7000	62.3	137.3
710	880	1200	1250	400	500	1000	1200	1250	PSTX1250-690-70	1SFA898221R7000	63.3	137.3

PSTX - The advanced range

Heavy-duty starts, class 30, in-line

Ordering details



PSTX30... PSTX105



PSTX142... PSTX170



PSTX210... PSTX370



PSTX470... PSTX570



PSTX720... PSTX840



PSTX1050... PSTX1250

Rated operational voltage U_e, 208...600 V, rated control supply voltage U_s, 100...250 V AC, 50/60 Hz

IEC rated operational power			current	UL/CSA rated operational power							
400V P_e kW	500V P_e kW	690V P_e kW	I_e A	200/208V P_e hp	220/240V P_e hp	440/480V P_e hp	550/600V P_e hp	FLA	Type	Order code	Net Weight (kg)	Net Weight (lb)
11	15	-	22	5	7.5	15	20	25	PSTX30-600-70	1SFA898103R7000	4.6	10.1
15	18.5	-	30	7.5	10	20	25	28	PSTX37-600-70	1SFA898104R7000	4.6	10.1
18.5	22	-	37	10	10	25	30	34	PSTX45-600-70	1SFA898105R7000	4.6	10.1
22	25	-	45	10	15	30	40	42	PSTX60-600-70	1SFA898106R7000	4.6	10.1
30	37	-	60	20	20	40	50	60	PSTX72-600-70	1SFA898107R7000	4.7	10.4
37	45	-	72	20	25	50	60	68	PSTX85-600-70	1SFA898108R7000	4.7	10.4
45	55	-	85	25	30	60	75	80	PSTX105-600-70	1SFA898109R7000	4.7	10.4
55	75	-	106	30	40	75	100	104	PSTX142-600-70	1SFA898110R7000	7.0	15.4
75	90	-	143	40	50	100	125	130	PSTX170-600-70	1SFA898111R7000	8.9	19.6
90	110	-	171	50	60	125	150	169	PSTX210-600-70	1SFA898112R7000	13.3	29.3
110	132	-	210	60	75	150	200	192	PSTX250-600-70	1SFA898113R7000	15.5	34.2
132	160	-	250	75	100	200	250	248	PSTX300-600-70	1SFA898114R7000	15.5	34.2
160	200	-	300	100	100	250	300	302	PSTX370-600-70	1SFA898115R7000	15.5	34.2
200	257	-	370	125	150	300	350	361	PSTX470-600-70	1SFA898116R7000	25.0	55.1
250	315	-	470	150	200	400	500	480	PSTX570-600-70	1SFA898117R7000	27.0	59.5
315	400	-	570	200	200	500	600	590	PSTX720-600-70	1SFA898118R7000	46.5	102.5
400	500	-	720	250	300	600	700	720	PSTX840-600-70	1SFA898119R7000	46.5	102.5
450	600	-	840	300	350	700	800	840	PSTX1050-600-70	1SFA898120R7000	62.3	137.3
560	730	-	1050	400	450	900	1000	1062	PSTX1250-600-70	1SFA898121R7000	63.3	137.3

Rated operational voltage Ue, 208...690 V, rated control supply voltage U_s, 100...250 V AC, 50/60 Hz

IEC rated operational power			current	UL/CSA rated operational power							
400V P_e kW	500V P_e kW	690V P_e kW	I_e A	200/208V P_e hp	220/240V P_e hp	440/480V P_e hp	550/600V P_e hp	FLA	Type	Order code	Net Weight (kg)	Net Weight (lb)
11	15	18.5	22	5	7.5	15	20	25	PSTX30-690-70	1SFA898203R7000	4.6	10.1
15	18.5	25	30	7.5	10	20	25	28	PSTX37-690-70	1SFA898204R7000	4.6	10.1
18.5	22	30	37	10	10	25	30	34	PSTX45-690-70	1SFA898205R7000	4.6	10.1
22	25	37	44	10	15	30	40	42	PSTX60-690-70	1SFA898206R7000	4.6	10.1
30	37	55	60	20	20	40	50	60	PSTX72-690-70	1SFA898207R7000	4.7	10.4
37	45	59	72	20	25	50	60	68	PSTX85-690-70	1SFA898208R7000	4.7	10.4
45	55	75	85	25	30	60	75	80	PSTX105-690-70	1SFA898209R7000	4.7	10.4
55	75	90	106	30	40	75	100	104	PSTX142-690-70	1SFA898210R7000	7.0	15.4
75	90	132	143	40	50	100	125	130	PSTX170-690-70	1SFA898211R7000	8.9	19.6
90	110	160	171	50	60	125	150	169	PSTX210-690-70	1SFA898212R7000	13.3	29.3
110	132	184	210	60	75	150	200	192	PSTX250-690-70	1SFA898213R7000	15.5	34.2
132	160	220	250	75	100	200	250	248	PSTX300-690-70	1SFA898214R7000	15.5	34.2
160	200	257	300	100	100	250	300	302	PSTX370-690-70	1SFA898215R7000	15.5	34.2
200	257	355	370	125	150	300	350	361	PSTX470-690-70	1SFA898216R7000	25.0	55.1
250	315	450	470	150	200	400	500	480	PSTX570-690-70	1SFA898217R7000	27.0	59.5
315	400	560	570	200	200	500	600	590	PSTX720-690-70	1SFA898218R7000	46.5	102.5
400	500	710	720	250	300	600	700	720	PSTX840-690-70	1SFA898219R7000	46.5	102.5
450	600	800	840	300	350	700	800	840	PSTX1050-690-70	1SFA898220R7000	62.3	137.3
560	730	1000	1050	400	450	900	1000	1062	PSTX1250-690-70	1SFA898221R7000	63.3	137.3

PSTX - The advanced range

Normal starts, class 10, inside delta

Ordering details



PSTX30... PSTX105



PSTX142... PSTX170



PSTX210... PSTX370



PSTX470... PSTX570



PSTX720... PSTX840



PSTX1050... PSTX1250

Rated operational voltage U_e, 208...600 V, rated control supply voltage U_s, 100...250 V AC, 50/60 Hz

IEC rated operational power			current	UL/CSA rated operational power								
400V P_e kW	500V P_e kW	690V P_e kW	I_e A	200/208V P_e hp	220/240V P_e hp	440/480V P_e hp	550/600V P_e hp	FLA	Type	Order code	Net Weight (kg)	Net Weight (lb)
25	30	-	52	10	15	30	40	48	PSTX30-600-70	1SFA898103R7000	4.6	10.1
30	37	-	64	15	20	40	50	58	PSTX37-600-70	1SFA898104R7000	4.6	10.1
37	45	-	76	20	25	50	60	72	PSTX45-600-70	1SFA898105R7000	4.6	10.1
55	75	-	105	30	40	75	100	103	PSTX60-600-70	1SFA898106R7000	4.6	10.1
59	80	-	124	30	40	75	100	117	PSTX72-600-70	1SFA898107R7000	4.7	10.4
75	90	-	147	40	50	100	125	138	PSTX85-600-70	1SFA898108R7000	4.7	10.4
90	110	-	181	60	60	150	150	180	PSTX105-600-70	1SFA898109R7000	4.7	10.4
132	160	-	245	75	75	150	200	225	PSTX142-600-70	1SFA898110R7000	7.0	15.4
160	200	-	300	75	100	200	250	292	PSTX170-600-70	1SFA898111R7000	8.9	19.6
184	250	-	360	100	125	250	300	332	PSTX210-600-70	1SFA898112R7000	13.3	29.3
220	295	-	430	150	150	350	450	429	PSTX250-600-70	1SFA898113R7000	15.5	34.2
257	355	-	515	150	200	450	500	523	PSTX300-600-70	1SFA898114R7000	15.5	34.2
355	450	-	640	200	250	500	600	625	PSTX370-600-70	1SFA898115R7000	15.5	34.2
450	600	-	814	250	300	600	700	830	PSTX470-600-70	1SFA898116R7000	25.0	55.1
540	700	-	987	300	350	700	800	1020	PSTX570-600-70	1SFA898117R7000	27.0	59.5
710	880	-	1247	400	500	1000	1200	1240	PSTX720-600-70	1SFA898118R7000	46.5	102.5
800	1000	-	1455	500	600	1200	1500	1450	PSTX840-600-70	1SFA898119R7000	46.5	102.5
1000	1250	-	1810	600	700	1500	1800	1830	PSTX1050-600-70	1SFA898120R7000	62.3	137.3
1200	1500	-	2160	800	900	1800	2000	2160	PSTX1250-600-70	1SFA898121R7000	63.3	137.3

Rated operational voltage U_e, 208...690 V, rated control supply voltage U_s, 100...250 V AC, 50/60 Hz

IEC rated operational power			current	UL/CSA rated operational power								
400V P_e kW	500V P_e kW	690V P_e kW	I_e A	200/208V P_e hp	220/240V P_e hp	440/480V P_e hp	550/600V P_e hp	FLA	Type	Order code	Net Weight (kg)	Net Weight (lb)
25	30	45	52	10	15	30	40	48	PSTX30-690-70	1SFA898203R7000	4.6	10.1
30	37	55	64	15	20	40	50	58	PSTX37-690-70	1SFA898204R7000	4.6	10.1
37	45	59	76	20	25	50	60	72	PSTX45-690-70	1SFA898205R7000	4.6	10.1
55	75	90	105	30	40	75	100	103	PSTX60-690-70	1SFA898206R7000	4.6	10.1
59	80	110	124	30	40	75	100	117	PSTX72-690-70	1SFA898207R7000	4.7	10.4
75	90	132	147	40	50	100	125	138	PSTX85-690-70	1SFA898208R7000	4.7	10.4
90	110	160	181	60	60	150	150	180	PSTX105-690-70	1SFA898209R7000	4.7	10.4
132	160	220	245	75	75	150	200	225	PSTX142-690-70	1SFA898210R7000	7.0	15.4
160	200	257	300	75	100	200	250	292	PSTX170-690-70	1SFA898211R7000	8.9	19.6
184	250	315	360	100	125	250	300	332	PSTX210-690-70	1SFA898212R7000	13.3	29.3
220	295	400	430	150	150	350	450	429	PSTX250-690-70	1SFA898213R7000	15.5	34.2
257	355	500	515	150	200	450	500	523	PSTX300-690-70	1SFA898214R7000	15.5	34.2
355	450	600	640	200	250	500	600	625	PSTX370-690-70	1SFA898215R7000	15.5	34.2
450	600	800	814	250	300	600	700	830	PSTX470-690-70	1SFA898216R7000	25.0	55.1
540	700	960	987	300	350	700	800	1020	PSTX570-690-70	1SFA898217R7000	27.0	59.5
710	880	1200	1247	400	500	1000	1200	1240	PSTX720-690-70	1SFA898218R7000	46.5	102.5
800	1000	1400	1455	500	600	1200	1500	1450	PSTX840-690-70	1SFA898219R7000	46.5	102.5
1000	1250	1700	1810	600	700	1500	1800	1830	PSTX1050-690-70	1SFA898220R7000	62.3	137.3
1200	1500	2000	2160	800	900	1800	2000	2160	PSTX1250-690-70	1SFA898221R7000	63.3	137.3

PSTX - The advanced range

Heavy-duty starts, class 30, inside delta

Ordering details



PSTX30... PSTX105



PSTX142... PSTX170



PSTX210... PSTX370



PSTX470... PSTX570



PSTX720... PSTX840



PSTX1050... PSTX1250

Rated operational voltage U_e, 208...600 V, rated control supply voltage U_s, 100...250 V AC, 50/60 Hz

IEC rated operational power			current	UL/CSA rated operational power							
400V P_e kW	500V P_e kW	690V P_e kW	I_e A	200/208V P_e hp	220/240V P_e hp	440/480V P_e hp	550/600V P_e hp	FLA	Type	Order code	Net Weight (kg)	Net Weight (lb)
18.5	25	-	42	7.5	10	25	30	34	PSTX30-600-70	1SFA898103R7000	4.6	10.1
25	30	-	52	10	15	30	40	48	PSTX37-600-70	1SFA898104R7000	4.6	10.1
30	37	-	64	15	20	40	50	58	PSTX45-600-70	1SFA898105R7000	4.6	10.1
37	45	-	76	20	25	50	60	72	PSTX60-600-70	1SFA898106R7000	4.6	10.1
55	75	-	105	30	40	75	100	103	PSTX72-600-70	1SFA898107R7000	4.7	10.4
59	80	-	124	30	40	75	100	117	PSTX85-600-70	1SFA898108R7000	4.7	10.4
75	90	-	147	40	50	100	125	138	PSTX105-600-70	1SFA898109R7000	4.7	10.4
90	110	-	181	60	60	150	150	180	PSTX142-600-70	1SFA898110R7000	7.0	15.4
132	160	-	245	75	75	150	200	225	PSTX170-600-70	1SFA898111R7000	8.9	19.6
160	200	-	300	75	100	200	250	292	PSTX210-600-70	1SFA898112R7000	13.3	29.3
184	250	-	360	100	125	250	300	332	PSTX250-600-70	1SFA898113R7000	15.5	34.2
220	295	-	430	150	150	350	450	429	PSTX300-600-70	1SFA898114R7000	15.5	34.2
257	355	-	515	150	200	450	500	523	PSTX370-600-70	1SFA898115R7000	15.5	34.2
355	450	-	640	200	250	500	600	625	PSTX470-600-70	1SFA898116R7000	25.0	55.1
450	600	-	814	250	300	600	700	830	PSTX570-600-70	1SFA898117R7000	27.0	59.5
540	700	-	987	300	350	700	800	1020	PSTX720-600-70	1SFA898118R7000	46.5	102.5
710	880	-	1247	400	500	1000	1200	1240	PSTX840-600-70	1SFA898119R7000	46.5	102.5
800	1000	-	1455	500	600	1200	1500	1450	PSTX1050-600-70	1SFA898120R7000	62.3	137.3
1000	1250	-	1810	600	700	1500	1800	1830	PSTX1250-600-70	1SFA898121R7000	63.3	137.3

Rated operational voltage U_e, 208...690 V, rated control supply voltage U_s, 100...250 V AC, 50/60 Hz

IEC rated operational power			current	UL/CSA rated operational power							
400V P_e kW	500V P_e kW	690V P_e kW	I_e A	200/208V P_e hp	220/240V P_e hp	440/480V P_e hp	550/600V P_e hp	FLA	Type	Order code	Net Weight (kg)	Net Weight (lb)
18.5	25	37	42	7.5	10	25	30	34	PSTX30-690-70	1SFA898203R7000	4.6	10.1
25	30	45	52	10	15	30	40	48	PSTX37-690-70	1SFA898204R7000	4.6	10.1
30	37	55	64	15	20	40	50	58	PSTX45-690-70	1SFA898205R7000	4.6	10.1
37	45	59	76	20	25	50	60	72	PSTX60-690-70	1SFA898206R7000	4.6	10.1
55	75	90	105	30	40	75	100	103	PSTX72-690-70	1SFA898207R7000	4.7	10.4
59	80	110	124	30	40	75	100	117	PSTX85-690-70	1SFA898208R7000	4.7	10.4
75	90	132	147	40	50	100	125	138	PSTX105-690-70	1SFA898209R7000	4.7	10.4
90	110	160	181	60	60	150	150	180	PSTX142-690-70	1SFA898210R7000	7.0	15.4
132	160	220	245	75	75	150	200	225	PSTX170-690-70	1SFA898211R7000	8.9	19.6
160	200	257	300	75	100	200	250	292	PSTX210-690-70	1SFA898212R7000	13.3	29.3
184	250	315	360	100	125	250	300	332	PSTX250-690-70	1SFA898213R7000	15.5	34.2
220	295	400	430	150	150	350	450	429	PSTX300-690-70	1SFA898214R7000	15.5	34.2
257	355	500	515	150	200	450	500	523	PSTX370-690-70	1SFA898215R7000	15.5	34.2
355	450	600	640	200	250	500	600	625	PSTX470-690-70	1SFA898216R7000	25.0	55.1
450	600	800	814	250	300	600	700	830	PSTX570-690-70	1SFA898217R7000	27.0	59.5
540	700	960	987	300	350	700	800	1020	PSTX720-690-70	1SFA898218R7000	46.5	102.5
710	880	1200	1247	400	500	1000	1200	1240	PSTX840-690-70	1SFA898219R7000	46.5	102.5
800	1000	1400	1455	500	600	1200	1500	1450	PSTX1050-690-70	1SFA898220R7000	62.3	137.3
1000	1250	1700	1810	600	700	1500	1800	1830	PSTX1250-690-70	1SFA898221R7000	63.3	137.3

PSTX - The advanced range

Accessories



Cable connectors for CU cables

Cable connectors for Cu cables

Article	Wire range mm²	Tightening torque max Nm	Type	Order code	Pkg qty	Net kg	lb
PSTX142 ... PSTX170	6-120	8	KIT FC Cu XT4 3pcs	1SDA066917R1	3	0.18	0.40
PSTX142 ... PSTX170	2 x (50-95)	16	LZ185-2C/120	1SFN074709R1000	3	0.30	0.66
PSTX210 ... PSTX370	16-240	25	T5 400 3pcs	1SDA055016R1	3	0.36	0.79
PSTX210 ... PSTX370	2 x (95-185)	22	OZXB4/1	1SCA022194R0890	1	0.19	0.42
PSTX470 ... PSTX570	2 x (120-240)	35	T6 630-S6 6pcs	1SDA013922R1	6	0.57	1.26
PSTX570 ... PSTX1050	3 x (70-185)	45	T6 800-S6 6pcs	1SDA013956R1	6	2.12	4.68



Cable connectors for AL cables

Cable connectors for Al cables

Article	Wire range mm²	Tightening torque max Nm	Type	Order code	Pkg qty	Net kg	lb
PSTX142 ... PSTX170	95-185	31	KIT FC CuAl T4 3pcs	1SDA054988R1	3	0.14	0.31
PSTX210 ... PSTX370	185-240	43	KIT FC CuAl T5 400 3pcs	1SDA055020R1	3	0.24	0.54
PSTX470 ... PSTX1050	2 x (120-240)	31	KIT FC CuAl T6 630-S6 3pcs	1SDA023380R1	3	0.11	0.24

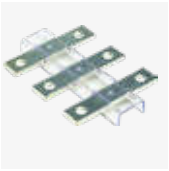

Terminal extensions

Terminal extensions

Article	Dimensions hole ø mm2	bar mm	Type	Order code	Pkg qty	NET kg	lb
PSTX142 ... PSTX170	8.5	17.5 x 5	LX205	1SFN074810R1000	1	0.25	5.55
PSTX210 ... PSTX370	10.5	20 x 5	LX370	1SFN075410R1000	1	0.35	0.77
PSTX470 ... PSTX570	10.5	25 x 5	LX460	1SFN075710R1000	1	0.50	1.10
PSTX720 ... PSTX840	13	40 x 6	LX750	1SFN076110R1000	1	0.85	1.87

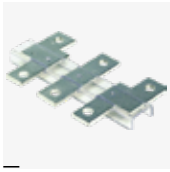

Terminal enlargements

Terminal enlargements

Article	Dimensions hole ø mm2	bar mm	Type	Order code	Pkg qty	Net kg	lb
PSTX30 ... PSTX105	6.5	15 x 3	LW110	1SFN074307R1000	1	0.07	0.15
PSTX142 ... PSTX170	10.5	17.5 x 5	LW205	1SFN074807R1000	1	0.25	5.55
PSTX210 ... PSTX370	10.5	20 x 5	LW370	1SFN075407R1000	1	0.45	0.99
PSTX470 ... PSTX570	10.5	25 x 5	LW460	1SFN075707R1000	1	0.73	1.61
PSTX720 ... PSTX840	13	40 x 6	LW750	1SFN076107R1000	1	1.23	2.71



Terminal shrouds

Terminal shrouds

Article	Description	Type	Order code	Pkg qty	Net kg	lb
PSTX142 ... PSTX170	short for use with cable clamps	LT205-30C	1SFN124801R1000	2	0.05	0.11
PSTX142 ... PSTX170	long for use with compression lugs	LT205-30L	1SFN124803R1000	2	0.22	0.49
PSTX210 ... PSTX370	short for use with cable clamps	LT370-30C	1SFN125401R1000	2	0.04	0.08
PSTX210 ... PSTX370	long for use with compression lugs	LT370-30L	1SFN125403R1000	2	0.28	0.62
PSTX210 ... PSTX370	long and deep for use with extending cable clamps, ATK300/2 and OZXB4	LT370-30D	1SFN125406R1000	2	0.15	0.33
PSTX470 ... PSTX570	short for use with cable clamps	LT460-AC	1SFN125701R1000	2	0.10	0.22
PSTX470 ... PSTX570	long for use with compression lugs	LT460-AL	1SFN125703R1000	2	0.80	1.76
PSTX720 ... PSTX1250	short for use with cable clamps	LT750-AC	1SFN126101R1000	2	0.12	0.27
PSTX720 ... PSTX1250	long for use with compression lugs	LT750-AL	1SFN126103R1000	2	0.83	1.82

PSTX - The advanced range

Accessories



USB cable

PSTX USB cable

Article	Type	Order code	Pkg qty	Net kg	lb
PSTX USB Cable	PSCA-1	1SFA899314R1001	1	0.05	0.12



Fieldbus plug adaptor

Fieldbus plug connection, cable included

Article	Type	Order code	Pkg qty	Net kg	lb
Fieldbus plug adaptor	PS-FBPA	1SFA896312R1002	1	0.05	0.11



I/O module

I/O module, 24 V DC digital input

Article	Type	Order code	Pkg qty	Net kg	lb
Extension module for I/O 24 VDC	DX111-FBP.0	1SAJ611000R0101	1	0.22	0.49
Extension module for I/O 110-230 VDC	DX122-FBP.0	1SAJ622000R0101	1	0.22	0.49



- Profibus DP-V1
- Modbus RTU



DeviceNet



BACnet MS/TP



- BACnet IP
- EthetCAT
- EtherNet/IP
- Modbus TCP
- Profinet IO

Anybus connection accesssory for communication protocol suitable for PSTX30 ...PSTX1250

Article	Conection ports	Type	Order code	Pkg qty	kg	lb
Profibus	1	AB-PROFIBUS-1	1SFA899300R1001	1	0.03	0.07
DeviceNet	1	AB-DEVICENET-1	1SFA899300R1002	1	0.03	0.07
Modbus-RTU [1)]	1	AB-MODBUS-RTU-1	1SFA899300R1003	1	0.03	0.07
BACnet IP	2	AB- BACNET-IP-2	1SFA899300R1004	1	0.03	0.07
EtherNet/IP	2	AB-ETHERNET-IP-2	1SFA899300R1006	1	0.03	0.07
Modbus/TCP	2	AB-MODBUS-TCP-2	1SFA899300R1008	1	0.03	0.07
Profinet	2	AB-PROFINET-IO-2	1SFA899300R1010	1	0.03	0.07
BACnet MS/TP	1	AB-BACNET-MSTP-1	1SFA899300R1011	1	0.03	0.07
EtherCAT	2	AB-ETHERCAT-IP-2	1SFA899300R1012	1	0.03	0.07
New CANopen	1	AB-CANopen-IO-1	1SFA899300R1013	1	0.03	0.07

[1)] only needed when Com 3-port is used with Extension I/O

PSTX - The advanced range

Technical data

Technical data	PSTX30... 1250
Rated insulation voltage U_i	690V
Rated operational voltage U_e	208...600 V, 208...690V +10% / -15%, 50/60Hz ±10%
Rated control supply voltage U_s	100...250 V +10%/-15%, 50/60Hz ±10%
Rated control circuit voltage U_c	Internal or external 24 V DC
Starting capacity at I_e	4 x I_e for 10 sec
Number of starts per hour	10 for PSTX30 ... PSTX370 [1] 6 for PSTX470 ... PSTX1250 [1]
Overload capability	Overload class 10
Maximum altitude	4000 m (13123 ft) [3]
Ambient temperature	
During operation	-25...+60 ºC, (-13...+140 F) [2]
During storage	-40...+70 ºC, (-40...+158 F)
Degree of protection	
Main circuit	-
Supply and control circuit	IP20
Main circuit	
Built-in bypass contactor	Yes
Cooling system - Fan cooled	Yes (thermostat controlled)
HMI for settings (Human Machine Interface)	
Display	LCD type, graphical
Languages	Arabic, Chinese, Czech, Dutch, English, Finnish, French, German, Greek, Indonesian, Italian, Polish, Portuguese, Russian, Spanish, Swedish and Turkish
Keypad	2 selection keys, 4 navigation keys, start key, stop key, info key and remote/local key
Signal relays	
Number of programmable signal relays	3 (each relay can be programmed to None, Run, Top of ramp, Event group 0-6, Sequence 1-3 Run, Sequence 1-3 Top of ramp or Run reverse)
K4	Default as Run signal
K5	Default as Top of Ramp (Bypass) signal
K6	Default as Event group 0 (Faults)
Rated operational voltage, U_e	250 V AC/24 V DC
Rated thermal current I_{th}	5 A
Rated operational current I_e at AC-15 (U_e=250 V)	1.5 A
Analog output	
Output signal reference	0...10 V, 0...10 mA, 0...20 mA, 4...20 mA
Type of output signal	Motor current (A), Main voltage (V), Active power (kW), Active power (HP), Reactive power (kVAr), Apparant power (kVArh), Active energy (kWh), Reactive energy (kVArh), cos phi, Motor temperature (%), Thyristor temperature (%), Motor voltage (%), Main frequency (Hz), PT100 temperature (centigrade), PTC resistance (Ohm)

Control circuit	
Number of inputs	2 (start, stop)
Number of additional programmable inputs	3 (each input can be programmed to: None, Reset, Enable, Slow speed forward (Jog), Slow speed reverse (Jog), Motor heating, Stand still brake, Start reverse, User defined protection, Emergency mode (active high), Emergency mode (active low), Fieldbus disable control, Start 1, Start 2, Start 3, Switch to remote control or Cancel brake)
Signalling indication LED	
Ready	Green
Run	Green
Fault	Red
Protection	Yellow
External keypad	
Detachable keypad	Yes
Display	LCD type, graphical
Ambient temperature	
During operation	-25...+60 ºC, (-13...+140 F)
During storage	-40...+70 ºC, (-40...+158 F)
Degree of protection	IP66 (Type 1, 4X, 12)
Start and stop functions	
Soft start with voltage ramp	Linear voltage ramp, suitable for most applications
Soft stop with voltage ramp	Used to prolong the stop sequence
Soft start with torque control	Linear torque ramp, the best way to start pumps
Soft stop with torque control	Commonly used to reduce water hammering in pumps
Kick start	More power in the start for heavy duty applications.
Full voltage start	0.5 second start ramp for applications with need of high starting torque
Sequence start	Start multiple motors with one softstarter
Current limit	Limits the current below a specified value
Dual current limit	Consist of a low level, a high level and a time between them
Current limit ramp	A linear increase of the current from the low to the high level
Torque limit	Limit the torque to between 20-200%
Pre-start function	Use Motor heating, Stand still brake or Jog automatically prior to start ramp
Jog with slow speed, forward and reverse	Run the motor in three different speeds, both forward and reverse
Start reverse (external contactors)	Internal logic that allows control of external contactors for reverse start
Dynamic brake	Provides a braking force to decrease stop time

[1] Valid for normal start (class 10) for 50% on time and 50% off time. If other data is required, contact your local ABB office.
[2] Above 40 ºC (104 F) up to max. 60 C (140 F) reduce the rated current with 0,8% per ºC (0,44% per F).
[3] When used at high altitudes, above 1000 meters (3281 ft) up to 4000 meters (13123 ft), de-rate the rated current using the following formula.
[% of I_e = 100- x-1000] x = actual altitude of the softstarter in meter, [% of I_e = 100 - x-3280] x = actual altitude of the softstarter in feet. For de-rating of voltage, contact your local ABB office. 150

PSTX - The advanced range

Technical data

Fieldbus connection	
Built-in Modbus RTU	Yes, with RS485 interface on terminals 23 and 24
Connection for Anybus	Yes, including most common protocols, see catalog for details
Connection for ABB Fieldbus plug	Yes, compatible with a special adapter, see catalog for details
Protections	
Electronic overload protection, EOL	User defined, class 10A, 10, 20, 30
Dual overload (separate overload for start and run)	Possible to set separate overloads for start and full speed
PTC connection	User defined temerature control with external PTC sensor
PT-100 connection	User defined temerature control with external PT-100 sensor
Locked rotor protection	Prevents start if motor is stuck, e.g. stuck pumps and conveyors
Current underload protection	Stops the process if the load is too light, e.g. a pump running dry
Current imbalance protection	User defined, checks current imbalance between the phases
Power factor underload protection	User defined, trip if power factor is out of range
Under voltage protection	User defined, prevents the motor from stalling in weak networks
Over voltage protection	User defined, prevents the motor from damage at high voltage levels
Voltage imbalance protection	User defined, checks voltage imbalance between the phases
Earth fault protection / ground fault protection	User defined, 0.1-1.0 sec, stops the process if earth fault is detected
Phase reversal protection	Prevents start if phases are connected in the wrong order
Bypass open protection	Trips if the bypass is open when it should be closed
User defined protection	Programmable input, can be used with externa protection device
Too long current limit protection	User defined, trips when the current has been at the current limit for too long time
HMI failure protection	Indicates communication failure between softstarter and HMI
Fieldbus failure protection	Indicates communication failure between softstarter and PLC
Extension IO failure protection	Indicates communication failure between softstarter and IO module
Max number of starts/hour	Prevents start if the thyristors gets too warm (thus used over specification)
Too long start time protection	User defined, trips when the starting time exceeds a set value
External faults detection	
Phase loss	Yes
Hight current	Yes
Low control supply voltage	Yes
Faulty usage	Yes, e.g. using limp mode inside-delta
Faulty connection	Yes
Bad network quality	Yes
Vibration test	
According to IEC 60068-2-6:2007	

Warnings	
Current underload warning	User defined on/off
Current imbalance warning	User defined on/off
Voltage imbalance warning	User defined on/off
Thyristor overload warning (SCR)	User defined on/off
Electronic overload Time-to-trip	User defined on/off
Short circuit warning (for Limp mode)	User defined on/off, for Limp mode
Over voltage warning	User defined on/off
Under voltage warning	User defined on/off
Power factor underload warning	User defined on/off
Locked rotor warning	User defined on/off
Faulty fan warning	User defined on/off
THD(U) - Total Harmonic Distortion warning	User defined on/off
Motor runtime limit warning	User defined on/off
Phase loss warning (for stand by)	User defined on/off, for stand by
EOL warning	User defined on/off
Internal faults detection	
Thyristor overload	Yes
Short circuit	Yes
Open circuit thyristor or gate	Yes
Heat sink over temperature	Yes
Shunt fault	Yes
PTC input	
Switch off resistance	2825 ohm ± 20%
Switch on resistance	1200 ohm ± 20%
Other functions	
Real time clock	Can maintain time when the softstarter isn't powered up, 48 h back-up
Event log	Log of events such as trips, parameters changed and operation
Emergency mode	To keep the softstarter running regardless of trip or failure. Activated via DI
Automatic restart	In case of trip and stopped motor, the softstarter can restart itself
Keypad password	Lock the keypad to inhibit unathorized motor control
Pump cleaning	Can reverse pump flow and clean out pipes
Electronic overload Time-to-cool	Time until the motor is ready to be restarted efter an EOL trip
Thyristor runtime measurement	Measures most electrical variables, e.g. voltage, current and power
Auto phase sequence detection	Detection of the phase sequence
Electricity metering	Measures most electrical variables, e.g. voltage, current and power
Motor heating	DC injection in all windings to heat up the motor. Useful in cold or humid environment
Stand still brake	Prevents the motor from moving, useful to keep fans from reversing
Voltage sags detection	User defined
Limp mode with two-phase motor control if one set of thyristors is shorted	Can keep process running until planned maintenance

For all functions and features see installation and commissioning manual, available on **solutions.abb/softstarters**

PSTX - The advanced range

Technical data

Fuse ratings and power losses

	Current range	Max power loss at rated I_e	Max fuse raiting - main circuit [1) 2)] Bussmann fuses, DIN43 620 (Knife)			Power requirements supply circuitHolding (VA) /Pull-in (VA)
Softstarter	**A**	**W**	**A**	**Type**	**Size**	
PSTX30	9.0...30.0	0.8	100	170M1567	000	49/51
PSTX37	11.1...37.0	1.2	125	170M1568	000	49/51
PSTX45	13.5...45.0	1.8	160	170M1569	000	49/51
PSTX60	18.0...60.0	3.2	160	170M1569	000	49/51
PSTX72	21.6...72.0	4.7	250	170M1571	000	49/51
PSTX85	22.5...85.0	6.5	315	170M1572	000	49/51
PSTX105	31.8...106.0	10	400	170M3819	1*	49/51
PSTX142	42.9...143.0	18	500	170M5810	2	49/53
PSTX170	51.3...171.0	26	630	170M5812	2	49/53
PSTX210	63.0...210.0	48	630	170M5812	2	56/276
PSTX250	75.0...250.0	68	700	170M5813	2	56/276
PSTX300	90.0...300.0	97	800	170M6812	3	56/276
PSTX370	111.0...370.0	148	900	170M6813	3	56/276
PSTX470	141.0...470.0	99	900	170M6813	3	67/434
PSTX570	171.0...570.0	146	1000	170M6814	3	67/434
PSTX720	216.0...720.0	78	1250	170M8554	3	61/929
PSTX840	252.0...840.0	106	1500	170M6018	3	61/929
PSTX1050 [3)]	315.0...1050.0	165	1800	170M6020	3	68/929
PSTX1250 [3) 4)]	375.0...1250.0	234	2000	170M6021	3	68/929

[1)] For the supply circuit 6 A delayed, for MCB use C characteristics.
[2)] For inside delta connection the fuses shall be placed inside the delta. Contact ABB for more information.
[3)] 170M6019 with fuse rating 1600 A should be used for 690 V version.
[4)] For 690 V version, Bussmann fuses are only available for motors with rated current up to 1150 A.

Tripping curves for electronic overload protection (cold) for PSE and PSTX

Tripping curves for the integrated electronic overload protection. All units have an integrated electronic overload protection that can be set to four different tripping classes. Below you find a curve for each tripping class in cold state. These tripping curves are valid for PSTX.

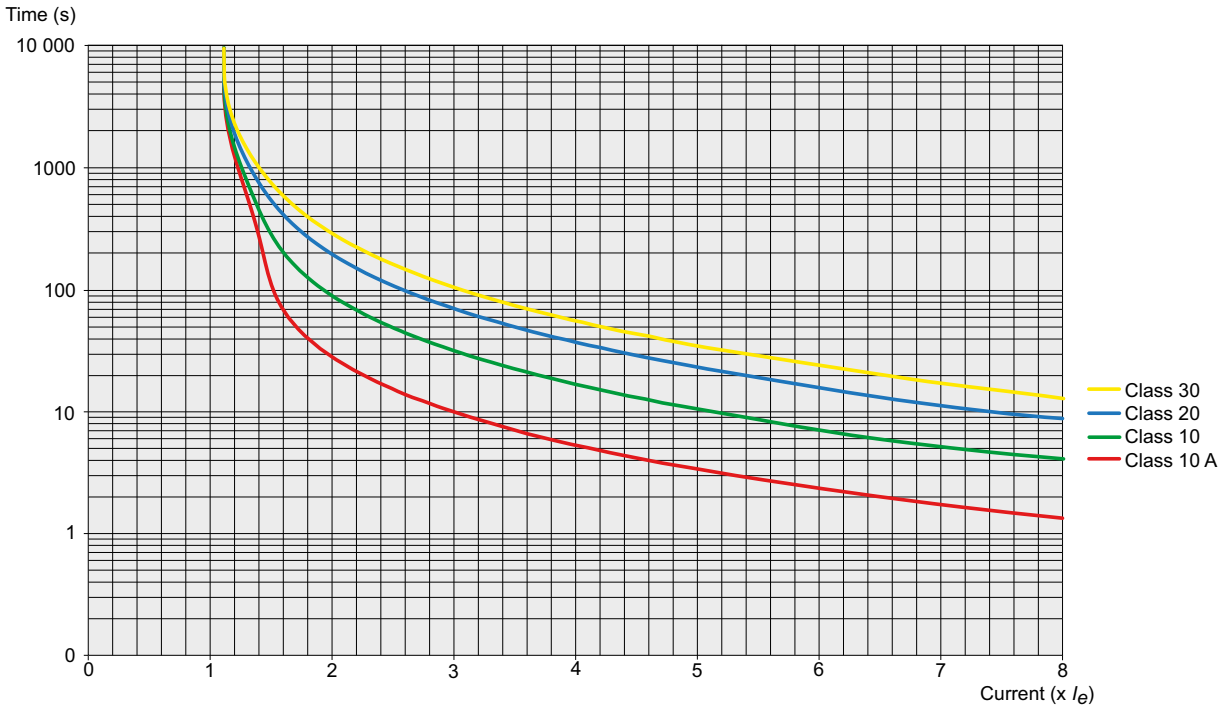

PSTX - The advanced range

Technical data

Main terminals

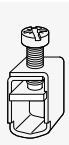
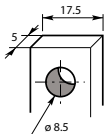

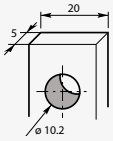

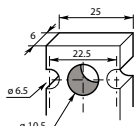

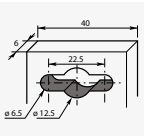

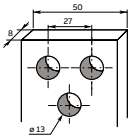

Article	PSTX30 ... PSTX105	PSTX142 ... PSTX170	PSTX210 ... PSTX370	PSTX470 ... PSTX570	PSTX720 ... PSTX1050	PSTX1250
Cu cable - flexible 1 x mm²	10...70 mm²	6...120 mm²	16...240 mm²	-	-	-
Clamp type	Included	1SDA066917R1	1SDA055016R1	-	-	-
Tightening torque	8 Nm	14 Nm	25 Nm	-	-	-
Cu cable - flexible 2 x mm²	6...35 mm²	50...95 mm²	70...185 mm²	-	-	-
Clamp type	Included	LZ185-2C/120 1SFN074709R1000	OZXB4 [1] 1SCA022194R0890	-	-	-
Tightening torque	8 Nm	16 Nm	22 Nm	-	-	-
Cu cable - Stranded 1 x mm²	10...95 mm²	6...150 mm²	16...300 mm²	-	-	-
Clamp type	Included	1SDA066917R1	1SDA055016R1	-	-	-
Tightening torque	8 Nm	14 Nm	25 Nm	-	-	-
Cu cable - Stranded 2 x mm²	6...35 mm²	50...120 mm²	70...185 mm²	120...240 mm²	-	-
Clamp type	Included	LZ185 - 2C/120 1SFN074709R1000	OZXB4 [1] 1SCA022194R0890	1SDA013922R1	-	-
Tightening torque	8 Nm	16 Nm	22 Nm	35 Nm	-	-
Cu cable - Stranded 3 x mm²	-	-	-	-	70...185 mm²	-
Clamp type	-	-	-	-	1SDA013956R1	-
Tightening torque	-	-	-	-	45 Nm	-
Al cable - Stranded 1 x mm²	-	95...185 mm²	185...240 mm²	-	-	-
Clamp type	-	1SDA0549881R1	1SDA055020R1	-	-	-
Tightening torque	-	31 Nm	43 Nm	-	-	-
Al cable - Stranded 2 x mm²	-	-	-	120...240 mm²	-	-
Clamp type	-	-	-	1SDA023380R1	-	-
Tightening torque	-	-	-	31 Nm	-	-
Lugs Width ≤	-	24 mm (0.945 in)	32 mm (1.260 in)	47 mm (1.850 in)	50 mm (1.969 in)	50 mm (1.969 in)
Diameter >=	-	8 mm (0.355 in)	10.2 mm (0.402 in)	10.5 mm (0.413 in)	12.5 mm (0.492 in)	13 mm (0.519 in)
Tightening torque	-	18 Nm (160 in lb)	28 Nm (248 in lb)	35 Nm (310 in lb)	45 Nm (398 in lb)	45 Nm (398 in lb)
Connection capacity acc to UL / CSA 1 x AWG / kcmil	6...2/0	6...300 kcmil	4...400 kcmil	-	-	-
Clamp type	Included	ATK185	ATK300	-	-	-
Tightening torque	71 in lb	300 in lb	375 in lb	-	-	-
Connection capacity acc to UL / CSA 2 x AWG / kcmil	-	-	4...500 kcmil	2/0...500 kcmil	2/0...500 kcmil	-
Clamp type	-	-	ATK300/2 [2]	ATK580/2	ATK580/2	-
Tightening torque	-	-	375 in lb	375 in lb	375 in lb	-
Connection capacity acc to UL / CSA 3 x AWG / kcmil	-	-	-	2/0...500 kcmil	2/0...500 kcmil	-
Clamp type	-	-	-	ATK750/3	ATK750/3	-
Tightening torque	-	-	-	375 in lb	375 in lb	-
Supply and control circuit						
Cu cable - Stranded 1 x mm²	0.75…2.5 mm² (19...14 AWG)					
Cu cable - Stranded 2 x mm²	0.75…1.5 mm² (19...16 AWG)					
Tightening torque	0.5 Nm (4.4 in lb)					

[1] Terminal shrouds 1SFN125406R1000 must be used.
[2] Terminal shrouds 1SFN125406R1000 can be used.

PSTX integrated bypass ratings

All ABB's softstarters are equipped with a built-in bypass contactor. This bypass contactor is rated AC-1 since it only make and break the motor in full speed at the rated current of the softstarter. However, in the PSTX470-PSTX1050 products, the bypass contactors has also a lower rated AC-3 rating which is shown in the table below.

Softstarter	PSTX470... PSTX570	PSTX720... PSTX1050	PSTX1250
Integrated contactor	**AF370**	**AF750**	**AF1250**
AC-3 rating at 400 V	370 A	750 A	-
IEC AC-3 Rated operational power at 400 V	200 kW	400 kW	-
UL/CSA 3-phase motor rating at 480 V	300 hp	600 hp	-

PSTX - The advanced range

Dimensions

PSTX30... 105

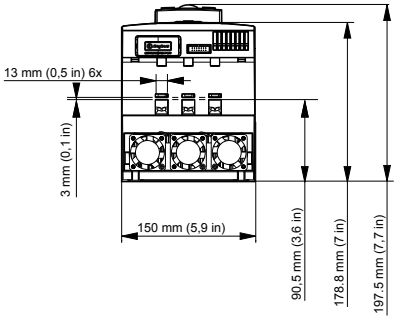

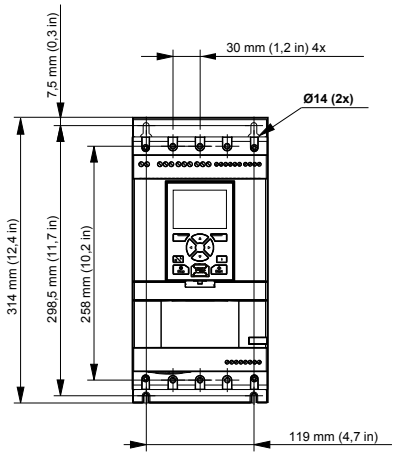

PSTX142... 170

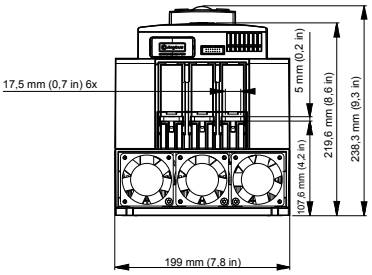

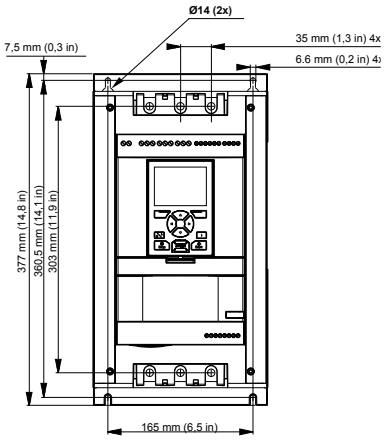

PSTX210... 370

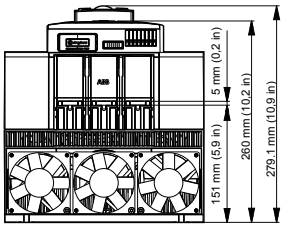

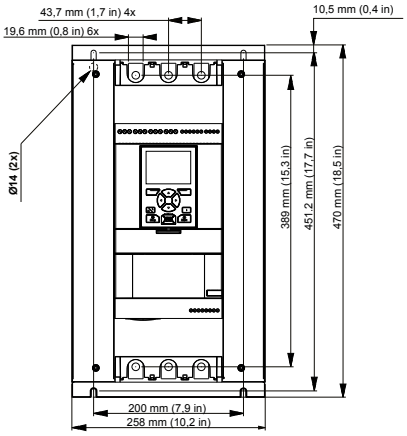

PSTX detachable keypad

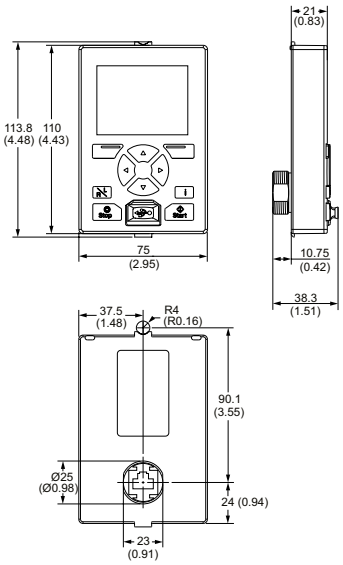

PSTX - The advanced range

Dimensions

PSTX470... 570

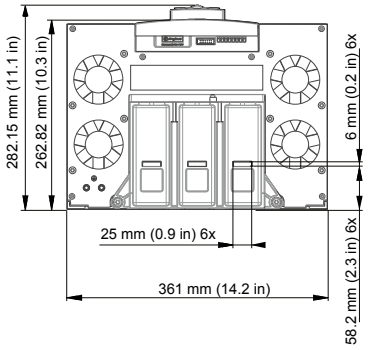

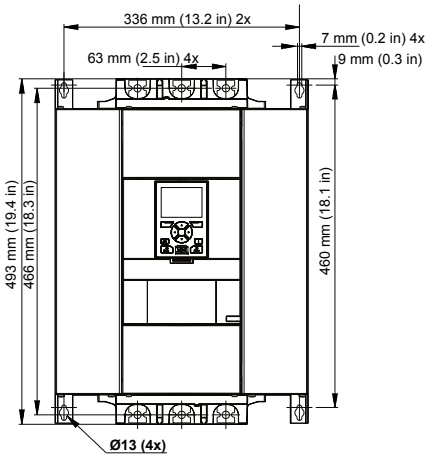

PSTX720... 840

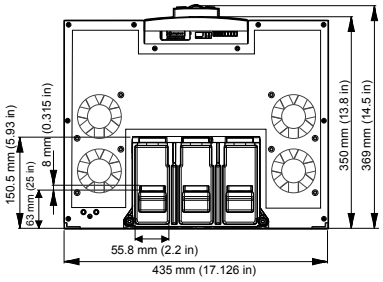

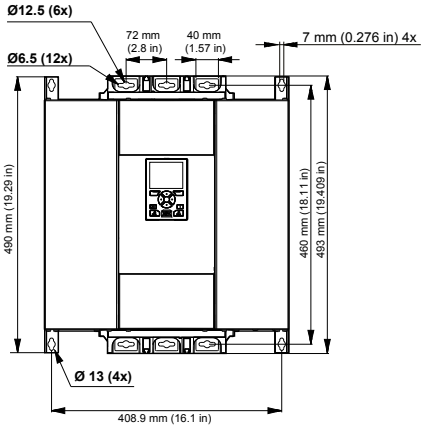

PSTX1050

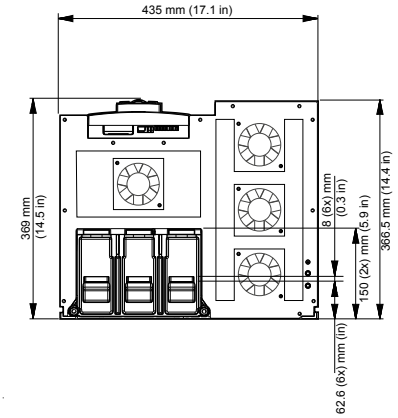

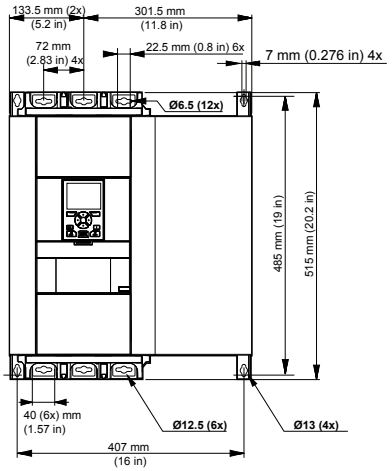

PSTX1250

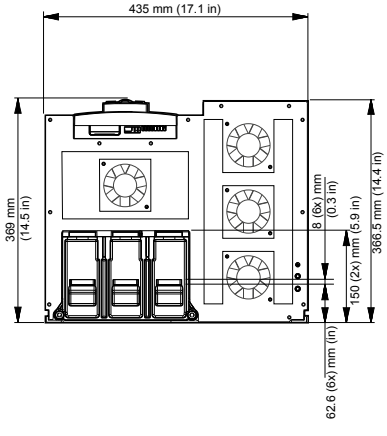

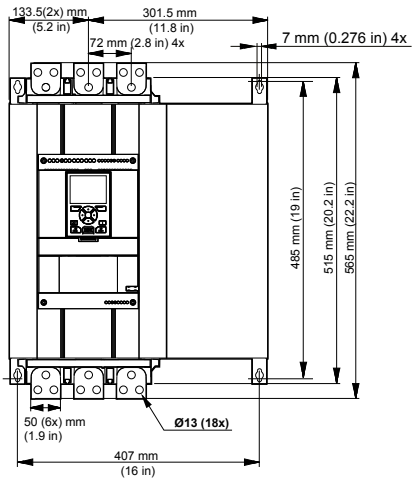

PSTX - The advanced range

Cicuit diagrams

CAUTION

Terminal 22 ⏚ is a function earth, it is not a protective earth. It shall be connected to the mounting plate.

PSTX30 ... PSTX1250 IEC circuit diagram

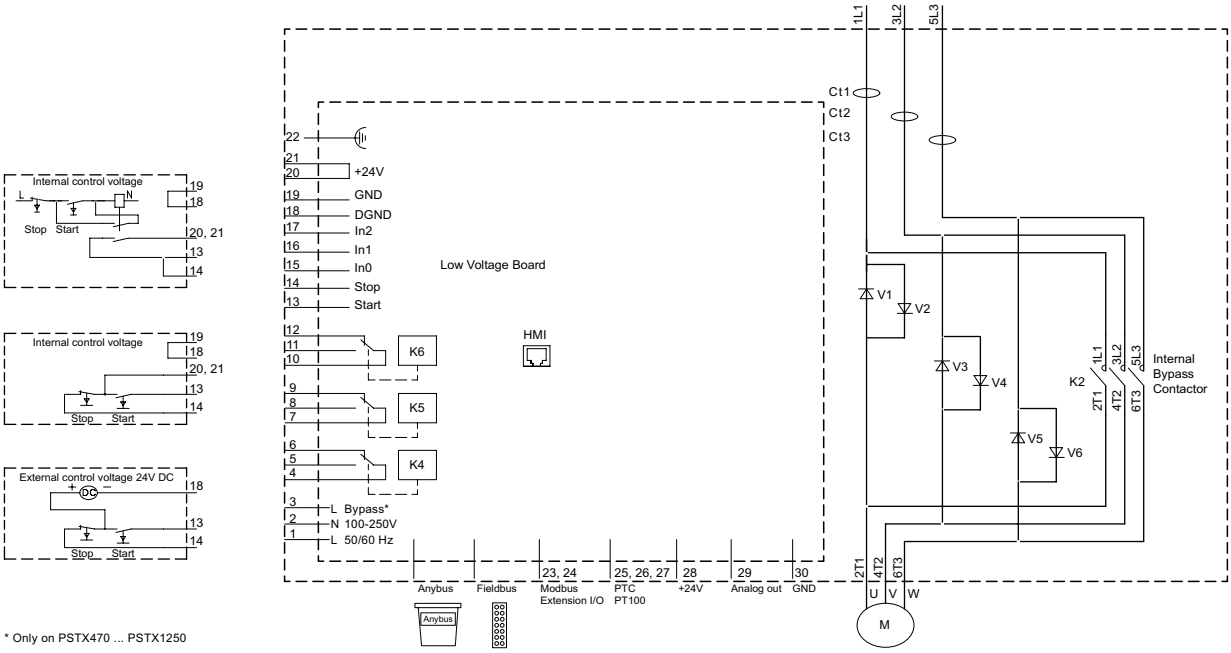

* Only on PSTX470 ... PSTX1250

PSTX30 ... PSTX1250 UL circuit diagram

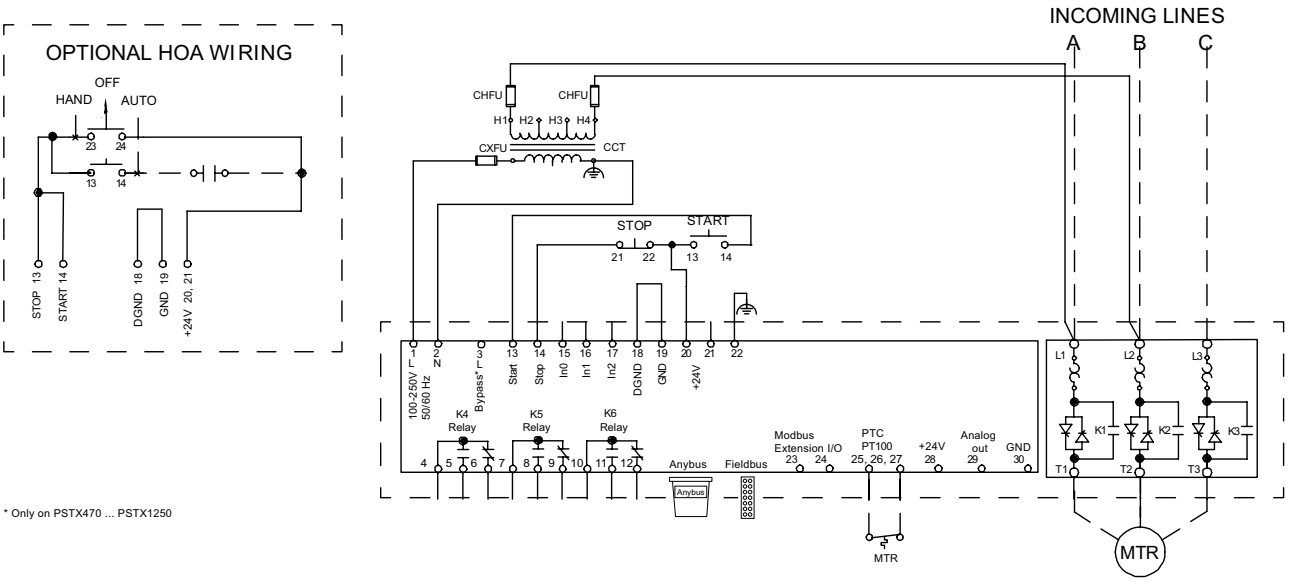

* Only on PSTX470 ... PSTX1250

For more circuit diagrams see **solutions.abb/softstarters**

PSTX - The advanced range

Cicuit diagrams

PSTX30 ... PSTX1250 In-line connected with line contactor and fuses

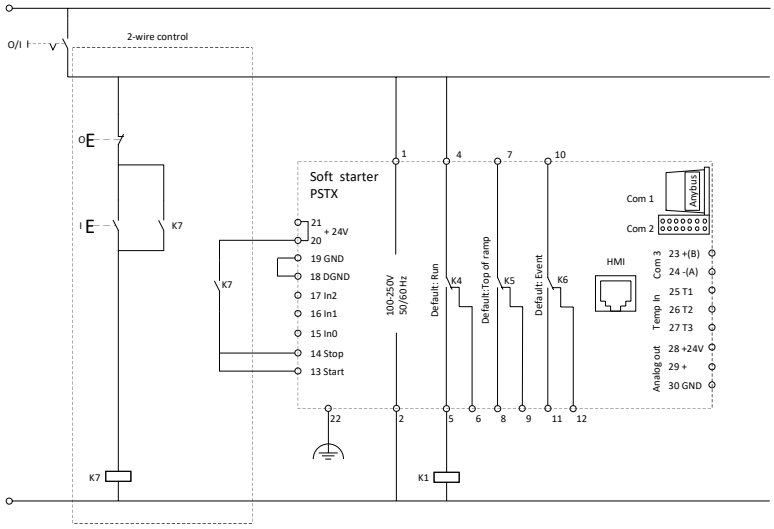

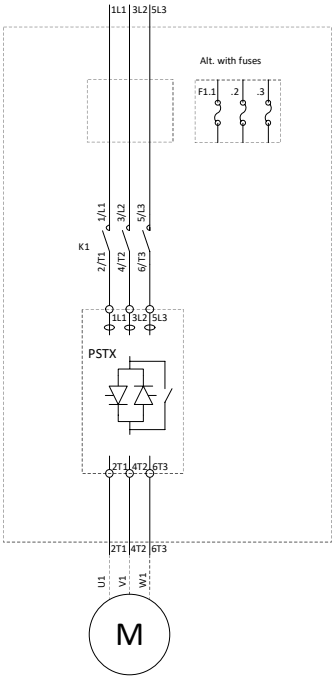

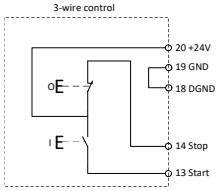

Coil consumption for main contactors.
Pull-in max 15A
Holding max 1.5A

If the pull-in or holding values are higher, the main contactors must be controlled via an auxiliary contactor.

PSTX30 ... PSTX1250 Inside-delta connected with contactor and fuses

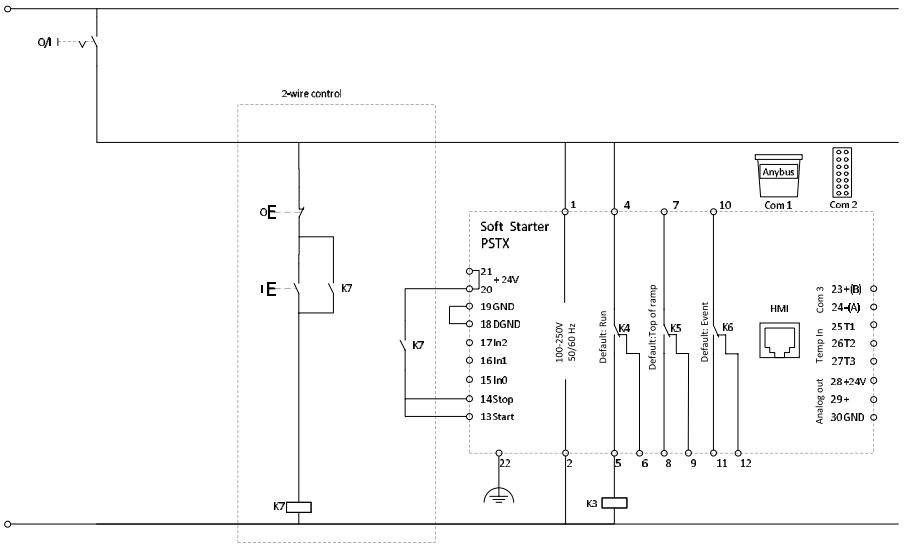

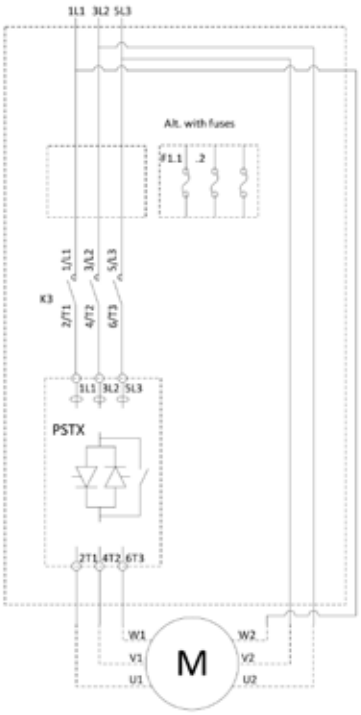

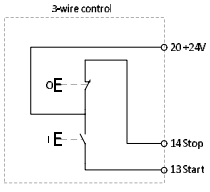

Coil consumption for Inside Delta contactor.
Pull-in max 15A
Holding max 1,5A

If the pull-in or holding values are
Higher, the Inside Delta contactor must be controlled via an auxiliary contactor.

Fieldbus communication
For softstarters

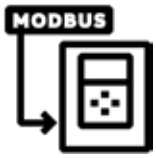

Fieldbus communication interface offering
PSR, PSE and PSTX softstarters can be connected to a fieldbus network for monitoring and control. All major industrial fieldbus protocols are covered with different accessories making the installation very flexible.

Built-in Modbus-RTU for PSTX and PSE
- Built-in Modbus RTU communication interface
- Easy to install using the Modbus RTU adaptor which is included with the Softstarter
- Through this communication interface it is possible to get full control and status information of the Softstarter as well as reading- and writing parameters

Anybus connection for PSTX
- Anybus connection accessory for communication protocol suitable for PSTX30... PSTX1250


PROFIBUS


DeviceNet


Modbus RTU


BACnet IP


EtherNet IP


Modbus TCP


PROFINET


BACnet MS/TP


EtherCAT


CANopen

Anybus connection accesssory for communication protocol suitable for PSTX30 ...PSTX1250

Article	Conection ports	Type	Order code	Pkg qty	kg	lb
Profibus	1	AB-PROFIBUS-1	1SFA899300R1001	1	0.03	0.07
DeviceNet	1	AB-DEVICENET-1	1SFA899300R1002	1	0.03	0.07
Modbus-RTU [1)]	1	AB-MODBUS-RTU-1	1SFA899300R1003	1	0.03	0.07
BACnet IP	2	AB- BACNET-IP-2	1SFA899300R1004	1	0.03	0.07
EtherNet/IP	2	AB-ETHERNET-IP-2	1SFA899300R1006	1	0.03	0.07
Modbus/TCP	2	AB-MODBUS-TCP-2	1SFA899300R1008	1	0.03	0.07
Profinet	2	AB-PROFINET-IO-2	1SFA899300R1010	1	0.03	0.07
BACnet MS/TP	1	AB-BACNET-MSTP-1	1SFA899300R1011	1	0.03	0.07
EtherCAT	2	AB-ETHERCAT-IP-2	1SFA899300R1012	1	0.03	0.07
New CANopen	1	AB-CANopen-IO-1	1SFA899300R1013	1	0.03	0.07

[1)] only needed when Com 3-port is used with Extension I/O

ABB Fieldbus interface
For softstarters

Fieldbus communication interface offering
Available communication protocols for softstarters

Communication	PSR	PSRC	PSE	PSTX
Modbus RTU	○	○	●	●
Profibus	○	○	○	○
DeviceNet	○	○	○	○
Modbus TCP	–	–	○	–
Anybus	–	–	–	○

●= Built-in
○ = Optional
– = not available

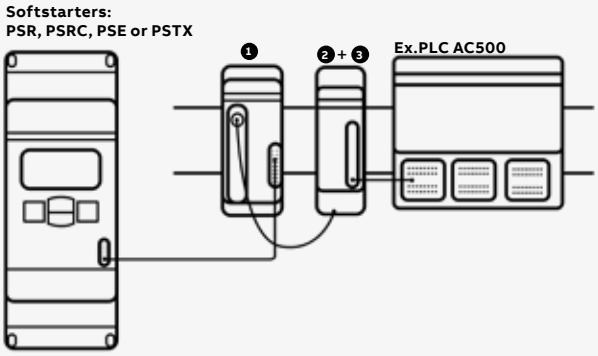



Fieldbus plug adapter

1 Fieldbus plug adapter with cable

Article	Type	Order code	Pkg qty	kg	lb
Fieldbus plug adapter	PS-FBPA	1SFA896312R1002	1	0.05	0.11



Fieldbus plug kit

2 Fieldbus plug kit for mounting fieldbus plug adapter together with fieldbus plugs
Includes: Holder, cable, cable holder and 2 terminal blocks

Article	Type	Order code	Pkg qty	kg	lb
Accessory kit	PS-FBPK	1SFA899320R1002	1	0.15	0.33



- Profibus
- DeviceNET

3 Fieldbus communication interface

Article	Type	Order code	Pkg qty	kg	lb
Profibus					
Profibus DP communication interface	PDP32.0	1SAJ242000R0001	1	0.05	0.11
Cable from PDP32.0 to drawer outside, length 1.5 m	CDP24.150	1SAJ929240R0015	1	0.06	0.13
DeviceNet					
DeviceNet communication interface; terminal block for fieldbus connection included	DNP31.0	1SAJ231000R0001	1	0.04	0.09
Cable from DNP31.0 to drawer outside, length 1.5 m	CDP24.150	1SAJ929240R0015	1	0.06	0.13
Modbus-TCP [1]					
Ethernet Modbus TCP interface	MTQ22-FBP	1SAJ260000R0100	1	0.17	0.38
Cable ETH-X1/X4-M12 female, length 1.5m	CDP17-FBP.150	1SAJ929170R0015	1	0.08	0.17
Modbus-RTU [1]					
Modbus RTU communication interface; terminal block for fieldbus connection included	MRP31.0	1SAJ251000R0001	1	0.04	0.09
Cable from MRP31.0 to drawer outside, length 1.5 m	CDP24.150	1SAJ929240R0015	1	0.06	0.13



Modbus-TCP

[1] only for PSE softstarter no fieldbus plug kit needed
[2] Only for PSR, Modbus RTU is built-in on PSE and PSTX.
Note: See separate catalog for fieldbus communication interfaces: Link
For more information visit the Universal Motor Controller website: Link

Marketing materials and tools

It is easy to access more information about ABB softstarters online. On our web page you will find tools for selection, coordination tables, CAD drawings and different types of documentation. **solutions.abb/softstarters**



Marketing materials

Panorama >
Softstarter product overview.

Leaflets >
One- or two pages information for example case studies, fact sheet and more.

Manuals >
Do you need help with settings or communication and more check out or softstarter manuals.

Certificates >
ISO cerificates and approvals for softstarters.

Videos >
Softstarter YouTube playlist.



—
PSTX105-600-70D
Box with accessories
1SFA898109R7008

Demo units

Article	Description	Order code
PSR16-600-70D	Demonstration unit without power electronics	1SFA896107R7009
PSR30-600-70D	Demonstration unit without power electronics	1SFA896109R7009
PSR45-600-70D	Demonstration unit without power electronics	1SFA896111R7009
PSR105-600-70D	Demonstration unit without power electronics	1SFA896115R7009
PSE105-600-70D	Demonstration unit without power electronics	1SFA897109R7009
PSTX105-600-70D	Demonstration unit without power electronics packed in a case with pushbuttons and USB cable	1SFA898109R7008
PSTX105-600-70D	Demonstration unit without power electronics	1SFA898109R7009
PSTX170-600-70D	Demonstration unit without power electronics	1SFA898111R7009
PSTX370-600-70D	Demonstration unit without power electronics	1SFA898115R7009

Extended warranty

Extended lifetime
Time to use your processes to their full potential. For Softstarters we have extended warranty options up to 3 years. Professional commissioning with warranty extension provides free of charge rapid response services, if the unexpected occurs.

Extended warranty tool >



PSTX simulator

Software application for testing and learning more about PSTX soft-starter. Simulate a motorstart in your computer an easy way to learn the menu and parameters.

PSTX Simulator >

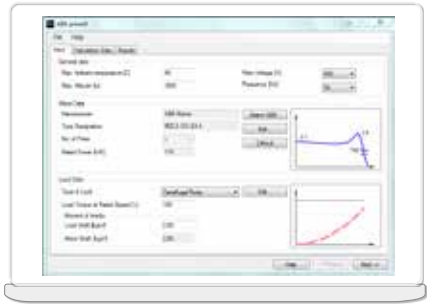

ABB proSoft

Our popular software for the best softstarter/application match, which is free to download and use. All relevant ABB motors are preset in the tool, and all other motors can be set manually.

ABB proSoft >



SoftstarterCare™

Service engineer tool makes softstarter commissioning easy by plug-in your PSE or PSTX softstarter using a PC. Access all parame-ters, event logs and troubleshooting information.

SoftstarterCare™ >



ABB e-configure

Product and application configuration tool for fast and easy online selection of softstarters.

ABB e-Configure >

Notes

Notes

Notes

—

For more information, please contact your local ABB representative or visit **solutions.abb/softstarters**

To get more information, install QR code reader on your mobile device, scan the code and see more.

© Copyright 2022 ABB. All rights reserved.
Specifications subject to change without notice.

Softstarter catalog type PSR, PSRC, PSE and PSTX, 1SFC132012C0201 rev I, 2022.03