Brand of NTN corporation

Technical data

6322

Single row deep groove ball bearings



Deep groove ball bearing, radial contact, pressed steel cage, open

VISUAL (S)

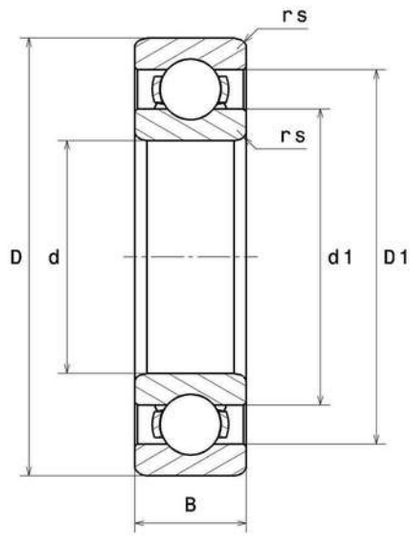

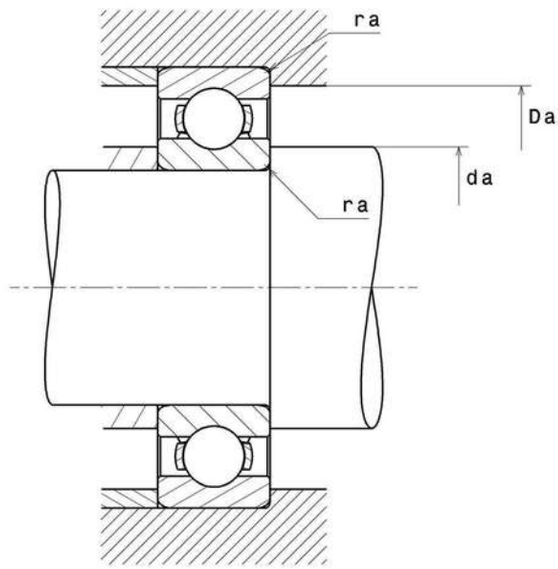

NTN Europe
1 rue des Usines · BP 2017 · 74010 Annecy Cedex · France · Tel. +33 (0)4 50 65 30 00
S.A. au capital de 322 639 919 € · RCS ANNECY B 325 821 072 · Id. Fiscale : FR 48 325 821 072
SIRET 325 821 072 00015 · Code APE 2815 Z · Code NACE 28.15

6322
Single row deep groove ball bearings

PRODUCT DEFINITION	
Brand	SNR
d - Internal diameter	110 mm
D - External diameter	240 mm
B - Bearing/Inner ring width	50 mm
d1 - External diameter inner ring	142,8 mm
D1 - Inner diameter outer ring	212,9 mm
rs - Min fillet radius	3 mm
Radial clearance class	CN
Mass	9,6 kg

PRODUCT PERFORMANCE	
C - Dynamic load	216000000 mN
C0 - Static load	180000000 mN
Cu - Fatigue limit load	6100000 mN
f0 - Coefficient	13.2
N ref - Reference thermal speed	24600 °/s
N lim - Mechanical Limit Speed	27600 °/s
Tmin - Min operating temperature	233,15 °K
Tmax - Max operating temperature	393,15 °K

BEARING FREQUENCIES	
BPFO - Over rolling frequency on outer ring (60 rpm)	3.071 Hz
BPFI - Over rolling frequency on inner (60 rpm)	4.929 Hz
BSF - Over rolling frequency on rolling element (60 rpm)	4.073 Hz
BRF - Rotational frequency – rolling element (60 rpm)	2.037 Hz

6322
Single row deep groove ball bearings

BEARING FREQUENCIES

FTF - Rotational frequency - cage (60 rpm)	0.384 Hz

ABUTMENT

da min - Min shoulder diameter IR	123 mm
Da max - Max shoulder diameter OR	227 mm
ra max - Max shaft & housing fillet radius	2,5 mm

INDUSTRY CALCUL FACTORS

Equivalent dynamic radial load

P = X.Fr + Y.Fa

$\frac{f_0 F_a}{C_0}$	e	Fa / Fr ≤ e		Fa / Fr > e	
		X	Y	X	Y
0.172	0.19	1	0	0.56	2.3
0.345	0.22				1.99
0.689	0.26				1.71
1.03	0.28				1.55
1.38	0.3				1.45
2.07	0.34				1.31
3.45	0.38				1.15
5.17	0.42				1.04
6.89	0.44				1

Equivalent static radial load

Po = Xo.Fr + Yo.Fa

X_0	Y_0
0.6	0.5

For single or DT bearing arrangement :

If Po <Fr, then use Po = Fr