SKF Belt Alignment Tools TKBA Series



Belt–driven machinery downtime caused by misalignment is a thing of the past

SKF Belt Alignment Tools

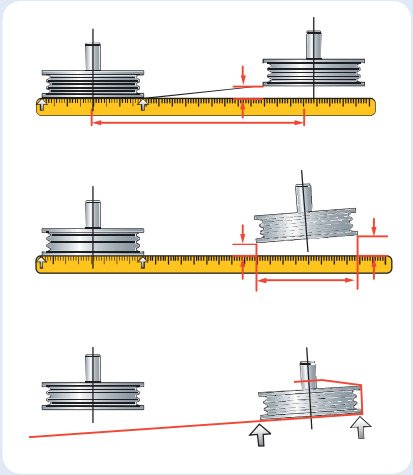

Measuring parallel and angular misalignment using a straight edge or a piece of string.

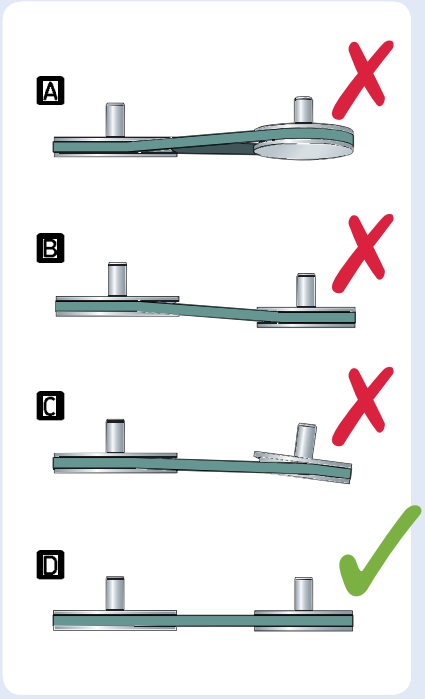

A Vertical angle misalignment.
B Parallel misalignment.
C Horizontal angle misalignment.
D Correct alignment.

One of the common reasons for unplanned downtime of belt-driven machinery is pulley misalignment. Pulley misalignment can increase wear on pulleys and belts as well as increasing the noise and vibration level that can result in unplanned machinery downtime. Another side effect of increased vibration is premature bearing failure. This too can cause unplanned machinery downtime.

Traditional belt alignment methods

These methods are usually visual in combination with a straight edge and/or length of string. Although quick to perform, they are often inaccurate.

Laser belt alignment methods

Using a laser belt alignment tool is quicker and more accurate than traditional methods. Belt alignment tools can either align the pulley faces or the pulley grooves.

Accurate pulley and belt alignment can help you:

- Increase bearing life.
- Increase machinery uptime, efficiency and productivity.
- Reduce wear on pulleys and belts.
- Reduce friction and thereby energy consumption.
- Reduce noise and vibration.
- Reduce costs of replacing components and machinery downtime.



TKBA 10



TKBA 20

SKF offers a range of three different belt alignment tools to enable accurate alignment for almost all applications. The tools are designed to be easy to use without any special training. The laser position indicates the nature of misalignment allowing easy and accurate adjustment.





TKBA 10 and TKBA 20

Versatile tools for pulley and sprocket alignment

The SKF TKBA 10 and TKBA 20 allow pulleys and sprockets to be aligned on the side face. The unit magnetically attaches to the inside or outside face of almost any belt pulley or chain sprocket and has no small parts or targets that can get lost. A laser line is projected from the transmitter unit to the reflector unit mounted on the opposite pulley. A reference line on the reflector unit directly indicates the offset and vertical angle misalignment. The reflected laser line shown on the transmitter unit shows the horizontal angle misalignment of all three.

- Powerful magnets allow fast and easy attachment.
- Facilitates simultaneous adjustment of tension and alignment.
- Can be used on almost all machines using V belts, banded belts, ribbed belts and most other belts as well as chain sprockets.
- SKF TKBA 10 utilises a red laser and can be used for distances up to 3 m *(10 ft)*.
- SKF TKBA 20 utilises a highly visible green laser and can be used for distances up to 6 m *(20 ft)*. It can even be used outdoors in sunny conditions.
- Sturdy aluminium housings help ensure assembly stability and accuracy during the alignment process.

TKBA 40

Highly accurate tool for V-belt pulley alignment

The SKF TKBA 40 aligns V-belt pulleys in the grooves. V–guides and powerful magnets allow the TKBA 40 to be fitted in the grooves of the pulley. With only two components, a laser–emitting unit and a receiver unit, the belt alignment tool is easy and fast to attach. The three–dimensional target area on the receiver unit allows the easy detection of misalignment as well as its nature; whether it is horizontal, vertical, parallel or a combination of all three.

- Powerful magnets allow fast and easy attachment.
- Three-dimensional target area simplifies the alignment process.
- Facilitates simultaneous adjustment of tension and alignment.
- V-guides facilitate the alignment of a wide range of V-belt pulleys.
- Aligns grooves of a V-belt pulley rather than its face, allowing optimum alignment of pulleys of unequal width or with dissimilar faces.
- A maximum operating distance of 6 m *(20 ft)* accommodates many applications.
- Special side adaptor allowing alignment of multi-ribbed and timing belt pulleys as well as sprockets is available as accessory.

Technical data

Designation	TKBA 10	TKBA 20	TKBA 40
Type of laser	Red laser diode	Green laser diode	Red laser diode
Laser	1) Built-in class 2 laser, <1 mW, 635 nm	1) Built-in class 2 laser, <1 mW, 532 nm	1) Built-in class 2 laser, <1 mW, 632 nm
Laser line length	2 m at 2 m *(6.6 ft at 6.6 ft)*	2 m at 2 m *(6.6 ft at 6.6 ft)*	3 m at 2 m *(9.8 ft at 6.6 ft)*
Measurement accuracy angular	Better than 0,02° at 2 m *(6.6 ft)*	Better than 0,02° at 2 m *(6.6 ft)*	Better than 0,2°
Measurement accuracy offset	Better than 0,5 mm *(0.02 in.)*	Better than 0,5 mm *(0.02 in.)*	Better than 0,5 mm *(0.02 in.)*
Measurement distance	50 mm to 3 000 mm *(2 in. to 10 ft)*	50 mm to 6 000 mm *(2 in. to 20 ft)*	50 mm to 6 000 mm *(2 in. to 20 ft)*
Control	Laser on/off rocker switch	Laser on/off rocker switch	Laser on/off switch
Housing material	Aluminum, powder coat finish	Aluminum, powder coat finish	Extruded aluminium
Dimensions			
Transmitter unit	169 × 51 × 37 mm *(6.65 × 2.0 × 1.5 in.)*	169 × 51 × 37 mm *(6.65 × 2.0 × 1.5 in.)*	70 × 74 × 61 mm *(2.8 × 2.9 × 2.4 in.)*
Receiver unit	169 × 51 × 37 mm *(6.5 × 2.0 × 1.5 in.)*	169 × 51 × 37 mm *(6.5 × 2.0 × 1.5 in.)*	96 × 74 × 61 mm *(3.8 × 2.9 × 2.4 in.)*
Reflector dimensions	22 × 32 mm *(0.9 × 1.3 in.)*	22 × 32 mm *(0.9 × 1.3 in.)*	N/A
Weight			
Transmitter unit	450 g *(1.0 lbs)*	450 g *(1.0 lbs)*	320 g *(0.7 lbs)*
Receiver unit	430 g *(0.9 lbs)*	430 g *(0.9 lbs)*	270 g *(0.6 lbs)*
Mounting	Magnetic, side mounted	Magnetic, side mounted	Magnetic, groove mounted (optional side adapter TMEB A2)
V-guides	N/A	N/A	Size 1: 22 mm, short rods (3 pairs) Size 2: 22 mm, long rods (3 pairs) Size 3: 40 mm, short rods (3 pairs) Size 4: 40 mm, long rods (3 pairs)
Battery	2) AAA Alkaline type IEC LR03	2) AAA Alkaline type IEC LR03	2) AAA Alkaline type IEC LR03
Operation time	25 hours continuous operation	8 hours continuous operation	20 hours continuous operation
Carrying case dimensions	260 × 180 × 85 mm *(10.2 × 7.1 × 3.3 in.)*	260 × 180 × 85 mm *(10.2 × 7.1 × 3.3 in.)*	260 × 180 × 85 mm *(10.2 × 7.1 × 3.3 in.)*
Total weight (incl. case)	1,4 kg *(3.1 lbs)*	1,4 kg *(3.1 lbs)*	1,3 kg *(2.9 lbs)*
Operating temperature	0 to 40 °C *(32 to 104 °F)*	0 to 40 °C *(32 to 104 °F)*	0 to 40 °C *(32 to 104 °F)*
Storage temperature	–20 to +60 °C *(–4 to +140 °F)*	–20 to +60 °C *(–4 to +140 °F)*	–20 to +65 °C *(–4 to +150 °F)*
Relative humidity	10 to 90% RH non-condensing	10 to 90% RH non-condensing	10 to 90% RH non-condensing
IP rating	IP 40	IP 40	IP 40
Calibration certificate	Valid for two years	Valid for two years	Valid for two years
Case contents	1) TKBA 10 transmitter unit 1) TKBA 10 receiver unit 2) AAA batteries 1) Printed instructions for use 1) Calibration certificate	1) TKBA 20 transmitter unit 1) TKBA 20 receiver unit 2) AAA batteries 1) Printed instructions for use 1) Calibration certificate	1) TKBA 40 transmitter unit 1) TKBA 40 receiver unit 2) AA batteries 4) sizes of V-guides, 3) of each size 1) Printed instructions for use 1) Calibration certificate

Also available from SKF

SKF Belt Tension System

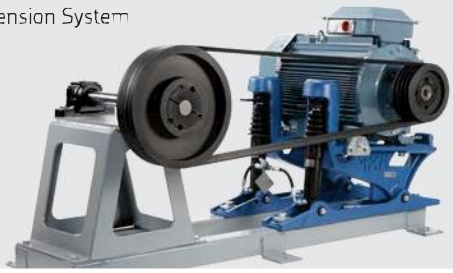

SKF Belt Frequency Meter



For additional information, please refer to our publications 6804 EN (6702 EN) and 6479 EN or online at: www.skfptp.com

® SKF is a registered trademark of the SKF Group.

© SKF Group 2014
The contents of this publication are the copyright of the publisher and may not be reproduced (even extracts) unless prior written permission is granted. Every care has been taken to ensure the accuracy of the information contained in this publication but no liability can be accepted for any loss or damage whether direct, indirect or consequential arising out of the use of the information contained herein.

PUB MP/P8 14173 EN · April 2014