Guide cylinders, Series GPC-BV

0822063039

AVENTICS Series SH

The AVENTICS Series GPC is distinguished by high side load capacity and torsion protection. The drive and guide rods are robust and precise with high torque and transverse force absorption.





Technical data

Industry	Industrial
Piston Ø	25 mm
Piston rod Ø	10 mm
Stroke	200 mm
Functional principle	Double-acting
Bearing type	Plain bearing
Magnetic piston	with magnetic piston
Cushioning	elastic
Min. working pressure	1.5 bar
Max. working pressure	8 bar
Min. ambient temperature	-10 °C
Min. ambient temperature	14 °F
Max. ambient temperature	70 °C
Max. ambient temperature	158 °F
Min. oil content of compressed air	0 mg/m³
Max. oil content of compressed air	5 mg/m³
Port	G 1/8
Retracting piston force	260 N
Retracting piston force	58.45 lbf

Extracting piston force	309 N
Extracting piston force	69.46 lbf
Max. speed	0.8 m/s
Impact energy	0.35 J
Medium	Compressed air
Max. particle size	50 µm
Pressure for determining piston forces	6,3 bar
Weight	2.97 kg

Material

Housing material	Aluminum
Surface housing	anodized
Seal material	Polyurethane
Material front plate	Steel, chrome-plated
Surface front plate	galvanized
Material guide rods	Stainless Steel
Bearing material	Sintered bronze
Material piston rod	Stainless Steel
Part No.	0822063039

Technical information

Note: Only the Ø10 variants fits to sensor series ST4. The sensor series ST6 and SN3 can be used for all other Ø variants.

The pressure dew point must be at least 15 °C less than ambient and medium temperature and may not exceed 3 °C.

The oil content of compressed air must remain constant during the life cycle.

Use only the approved oils from AVENTICS. Further information can be found in the “Technical information” document (available in https://www.emerson.com/en-us/support).

Dimensions

Guide cylinders, Series GPC-BV

0822063039

Ø 25 ... 100

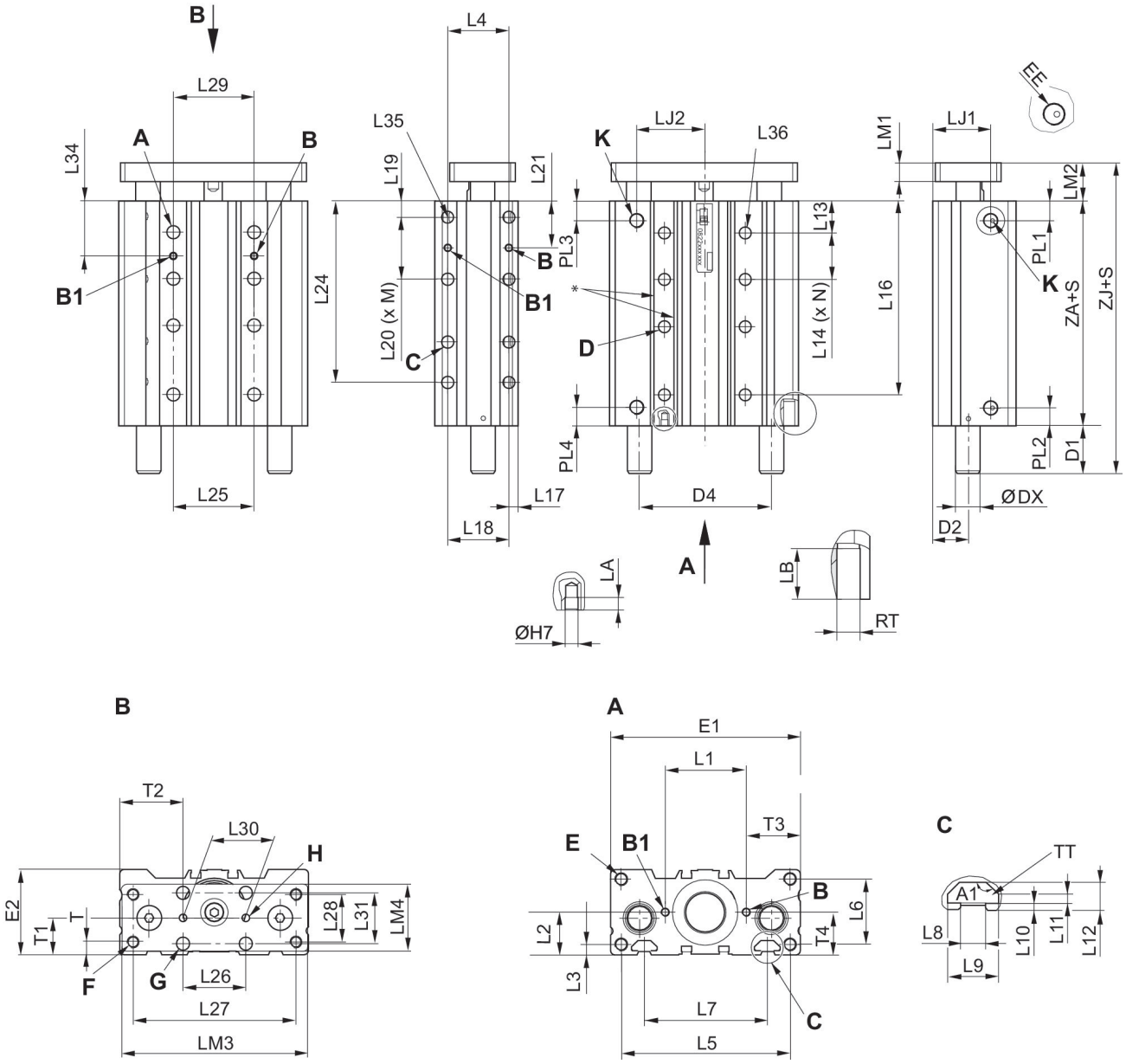

* Suitable for screws according to ISO 4762
S = stroke
Note: Only the Ø10 variants fits to sensor series ST4. The sensor series ST6 and SN3 can be used for all other Ø variants.

Piston Ø	A RTxLB	A1	B ØdxLA	B1 ØdxD	C RTxLB	D Ø 1)	D2	D4	DX
25	M6x10	135°	4x4	4x5	M6x10	5.5	18	59	16
32	M8x14	135°	4x4	4x5	M8x14	7.4	23	75.6	20
40	M8x14	135°	4x4	4x5	M8x14	7.4	23	86	20
50	M10x20	135°	5x5	5x6	M10x20	9.3	27.5	104	25
63	M10x20	135°	5x5	5x6	M10x20	9.3	35	124	25
80	M12x24	135°	6x6	6x7	M12x25	11.2	39.5	152	32
100	M12x24	135°	6x6	6x7	M12x25	11.2	39.5	174	32

Guide cylinders, Series GPC-BV

0822063039

Piston Ø	E RTxLB	E1	E2	F Ø 1)	G Ø 2)	H Ø 2)	K EE	L1	L2
25	M6x12	95	43	M6	6.5	4H8	G 1/8	35 ±0,1	20.5
32	M6x12	114	48.5	M8	6.5	4H8	G 1/8	44 ±0,1	24
40	M8x16	124	54.5	M8	8.5	4H8	G 1/8	53 ±0,15	27
50	M8x16	148	64	M8	8.5	4H8	G 1/4	66 ±0,15	32
63	M10x20	162	78.5	M10	10.5	5H8	G 1/4	84 ±0,15	39
80	M12x25	202	91.5	M12	10.5	5H8	G 1/4	100 ±0,15	46
100	M12x25	226	111	M12	12.5	6H8	G 3/8	120 ±0,15	55.5

Piston Ø	L3	L4	L5	L6	L7	L8	L9	L10	L11
25	4.5	25 ±0,1	85	34	52	6.15	12	1.5	1.5
32	5	33 ±0,1	105	26	70	8.2	16.7	2.2	2.8
40	6	40 ±0,15	110	42	80	8.2	16.7	2.2	2.8
50	8	48 ±0,15	133	34.5	93	8.2	16.7	2.2	2.8
63	8	60 ±0,15	147	62	112	10.2	20.3	6	6
80	9	60 ±0,15	182	54.5	132	10.2	20.3	6	6
100	9	60 ±0,15	206	76	155	10.2	20.3	6	6

Piston Ø	L12	L13	L15	L17	L18	L19	L22	L25	L26
25	5.5	16.5	25	5.5	25	8	32	32	30
32	9	20.5	33	6.5	33	10	42	42	32
40	9	20	40	6	40	10	53	53	42
50	9	23	48	7.5	48	12	63	63	53
63	16	24	60	11	60	12	80	80	63
80	16	33.5	60	12	60	13	96	96	80
100	16	32.5	60	12	60	13	119	119	96

Piston Ø	L27	L28	L29	L30	L31	LJ1	LJ2	LM1	LM2
25	81	23	32 ±0,1	30 ±0,2	24	29.6	32	10	15.5
32	97	30	42 ±0,1	32 ±0,2	25	40	40.5	12	18.5
40	107	30	53 ±0,15	42 ±0,2	32.5	37.8	44	12	19.5
50	134	40	63 ±0,15	53 ±0,2	40	54.5	50.5	15	23.5
63	140	48	80 ±0,15	63 ±0,2	48	57	59	15	24
80	176	52	96 ±0,15	80 ±0,2	60	77.5	74.5	20	30
100	204	64	119 ±0,15	96 ±0,2	60	68.5	86.5	20	31

Piston Ø	LM3	LM4	PL1	PL2	PL3	PL4	T	T1	T2
25	93	33	11	11	11	11	6.5	18 ±0,4	32,5 ±0,4
32	112	43	13.5	13.5	13.5	13.5	8	23 ±0,4	41 ±0,4
40	122	43	12	12	12	12	8	23 ±0,4	41 ±0,4
50	146	52	13	13	13	13	7.5	27,5 ±0,4	47,5 ±0,4
63	160	67	13.7	13.7	13.7	13.7	11	35 ±0,4	49,5 ±0,5
80	200	76	23	23	23	23	13.5	39,5 ±0,45	61 ±0,5
100	224	84	21.5	21.5	21.5	21.5	18.5	50,5 ±0,45	65 ±0,5

Piston Ø	T3	T4	TT	ZA
25	30 ±0,05	20,5 ±0,05	N6	42 3)
32	35 ±0,05	24 ±0,05	N8	46.5

Piston Ø	T3	T4	TT	ZA
40	35,5 ±0,1	27 ±0,1	N8	44
50	41 ±0,1	32 ±0,1	N8	46
63	39 ±0,1	39 ±0,1	N10	51
80	51 ±0,2	46 ±0,2	N10	77
100	53 ±0,2	55,5 ±0,2	N10	77

S = stroke
To determine the cylinder length (ZA) for intermediate strokes (i.e. stroke 10 with dia. 40), the next available standard stroke size must be used
1) Through hole with thread

2) through-hole
3) For stroke 150, ZA = 52, for stroke 25, ZA = 47
Two holes C-C 10 mm.

Piston Ø	S10 L36	S20 L36	S25 L36	S30 L36	S40 L36	S50 L36	S75 L36	S100 L36	S125 L36
25	4	4	4	4	6	6	8	10	10
32	4	4	4	4	4	6	6	8	10
40	4	4	4	4	4	4	6	6	8
50	4	4	4	4	4	4	4	6	8
63	4	4	4	4	4	4	4	6	6
80	4	4	4	4	4	4	4	6	6
100	4	4	4	4	4	4	4	6	6

Piston Ø	S160 L36	S200 L36	S10 ZJ	S20 ZJ	S25 ZJ	S30 ZJ	S40 ZJ	S50 ZJ	S75 ZJ
25	10	10	57.5	57.5	57.5	57.5	57.5	57.5	68.5
32	10	10	-	-	82	-	-	82	82
40	10	10	-	-	82.6	-	-	82.6	82.6
50	8	10	-	-	94.5	-	-	94.5	94.5
63	8	10	-	-	94.6	-	-	94.6	94.6
80	8	8	-	-	117.5	-	-	117.5	117.5
100	8	8	-	-	117.5	-	-	117.5	117.5

Piston Ø	S100 ZJ	S125 ZJ	S160 ZJ	S200 ZJ
25	68.5	84.5	84.5	84.5
32	82	100	100	100
40	82.6	124.5	124.5	124.5
50	94.5	124.6	124.6	124.6
63	94.6	145.5	145.5	145.5
80	117.5	145.5	145.5	145.5
100	117.5	145.5	145.5	145.5

S = stroke

Piston Ø	S10 L34	S20 L34	S25 L34	S30 L34	S40 L34	S50 L34	S75 L34	S100 L34	S125 L34
25	26	29	29	29	29	29	29	29	29
32	35.5	35.5	35.5	37	37	37	37	37	37
40	35	35	35	40	40	40	40	40	40
50	35.5	35.5	35.5	47	47	47	47	47	47
63	38	38	38	38	38	38	54	54	54

Guide cylinders, Series GPC-BV

0822063039

2024-03-18

Piston Ø	S10 L34	S20 L34	S25 L34	S30 L34	S40 L34	S50 L34	S75 L34	S100 L34	S125 L34
80	51	51	51	51	51	63.5	63.5	63.5	63.5
100	51	51	51	51	51	62.5	62.5	62.5	62.5

Piston Ø	S160 L34	S200 L34	S10 L35	S20 L35	S25 L35	S30 L35	S40 L35	S50 L35	S75 L35
25	29	29	4	4	4	4	6	6	8
32	37	37	4	4	4	4	4	4	6
40	40	40	4	4	4	4	4	4	6
50	47	47	4	4	4	4	4	4	4
63	54	54	4	4	4	4	4	4	4
80	63.5	63.5	4	4	4	4	4	4	4
100	62.5	62.5	4	4	4	4	4	4	4

Piston Ø	S100 L35	S125 L35	S160 L35	S200 L35
25	8	10	10	10
32	8	8	10	10
40	6	6	8	10
50	6	6	8	8
63	4	6	6	8
80	4	6	6	6
100	4	4	6	6

S = stroke

Piston Ø	S10 M	S20 M	S25 M	S30 M	S40 M	S50 M	S75 M	S100 M	S125 M
25	1	1	1	1	1	1	2	3	3
32	-	-	1	1	1	1	2	2	3
40	-	-	1	1	1	1	1	2	2
50	-	-	1	1	1	1	1	1	2
63	-	-	1	1	1	1	1	1	1
80	-	-	1	1	1	1	1	1	1
100	-	-	1	1	1	1	1	1	1

Piston Ø	S160 M	S200 M	S40 L24	S50 L24	S75 L24	S100 L24	S125 L24	S160 L24	S200 L24
25	3	3	60	70	95	-	145	180	220
32	3	3	-	-	-	122.5	-	182.5	222.5
40	3	3	-	-	91	-	-	-	216
50	2	3	-	-	-	116	-	176	-
63	2	2	-	-	-	-	142	-	217
80	1	2	-	-	-	-	160	195	-
100	1	1	-	-	-	-	-	195	235

S = stroke

Piston Ø	S=20 L20	S=25 L20	S=30 L20	S=40 L20	S=50 L20	S=75 L20	S=100 L20	S=125 L20	S=160 L20
25	22	32	32	32	32	32	32	32	32

Guide cylinders, Series GPC-BV

0822063039

Piston Ø	S=20 L20	S=25 L20	S=30 L20	S=40 L20	S=50 L20	S=75 L20	S=100 L20	S=125 L20	S=160 L20
32	35	35	42	42	42	42	42	42	42
40	30	30	53	53	53	53	53	53	53
50	30	30	30	30	30	63	63	63	63
63	30	30	30	30	30	80	80	80	80
80	47	47	47	47	47	96	96	96	96
100	49	49	49	49	49	49	119	119	119

Piston Ø	S=200 L20	S=20 L21	S=25 L21	S=30 L21	S=40 L21	S=50 L21	S=75 L21	S=100 L21	S=125 L21
25	32	19	24	24	24	24	24	24	24
32	42	27.5	27.5	31	31	31	31	31	31
40	53	25	25	36.5	36.5	36.5	36.5	36.5	36.5
50	63	27	27	27	27	27	43.5	43.5	43.5
63	80	27	27	27	27	27	52	52	52
80	96	36.5	36.5	36.5	36.5	36.5	61	61	61
100	119	37.5	37.5	37.5	37.5	37.5	37.5	72.5	72.5

Piston Ø	S=160 L21	S=200 L21
25	24	24
32	31	31
40	36.5	36.5
50	43.5	43.5
63	52	52
80	61	61
100	72.5	72.5

S = stroke

Piston Ø	S=10 N	S=20 N	S=25 N	S=30 N	S=40 N	S=50 N	S=75 N	S=100 N	S=125 N
25	1	1	1	1	1	2	3	3	3
32	-	-	1	1	1	1	2	3	3
40	-	-	1	1	1	1	2	2	3
50	-	-	1	1	1	1	1	2	2
63	-	-	1	1	1	1	1	1	2
80	-	-	1	1	1	1	1	1	2
100	-	-	1	1	1	1	1	1	2

Piston Ø	S=160 N	S=200 N	S=40 L16	S=50 L16	S=100 L16	S=125 L16	S=160 L16	S=200 L16
25	3	3	65.5	-	125.5	150.5	185.5	225.5
32	3	3	-	76	-	151	186	226
40	3	3	-	-	-	-	184	224
50	3	3	-	-	-	148	-	223
63	2	3	-	-	127	-	187	-
80	2	3	-	-	143.5	-	203.5	-
100	2	3	-	-	144.5	-	204.5	-

S = stroke

Piston Ø	S=10 D1	S=20 D1	S=25 D1	S=30 D1	S=40 D1	S=50 D1	S=75 D1	S=100 D1	S=125 D1
25	0	0	0	0	0	0	11	11	27
32	-	-	17	17	17	17	17	17	35
40	-	-	19	19	19	19	19	19	37
50	-	-	25	25	25	25	25	25	55
63	-	-	19	19	19	19	19	19	49
80	-	-	10.5	10.5	10.5	10.5	10.5	10.5	38.5
100	-	-	9.5	9.5	9.5	9.5	9.5	9.5	37.5

Piston Ø	S=150 D1	S=160 D1	S=200 D1	S=10 L14	S=20 L14	S=25 L14	S=30 L14	S=40 L14	S=50 L14
25	27	27	27	19	25	25	25	25	25
32	35	35	35	30	30	30	33	33	33
40	37	37	37	30	30	30	40	40	40
50	55	55	55	25	25	25	48	48	48
63	49	49	49	28	28	28	28	28	28
80	38.5	38.5	38.5	35	35	35	60	60	60
100	37.5	37.5	37.5	37	37	37	60	60	60

Piston Ø	S=75 L14	S=100 L14	S=125 L14	S=160 L14	S=200 L14
25	25	25	25	25	25
32	33	33	33	33	33
40	40	40	40	40	40
50	48	48	48	48	48
63	60	60	60	60	60
80	60	60	60	60	60
100	60	60	60	60	60

S = stroke

Permissible static side load F [N] at distance L

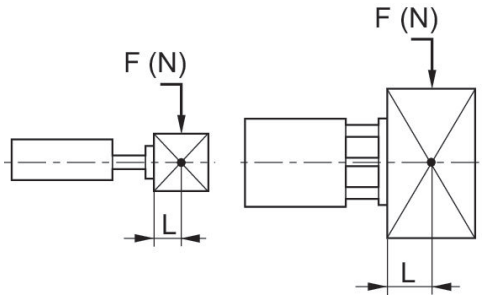

Permissible static moment M [Nm]

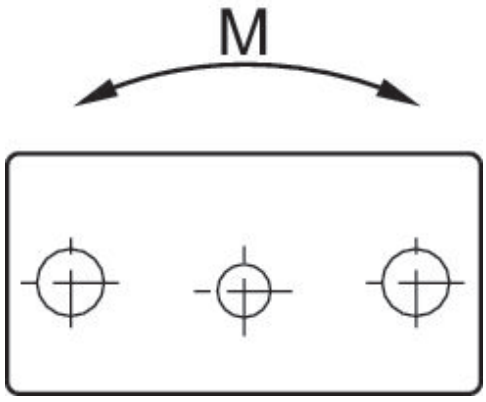

Permissible static side force F [N]

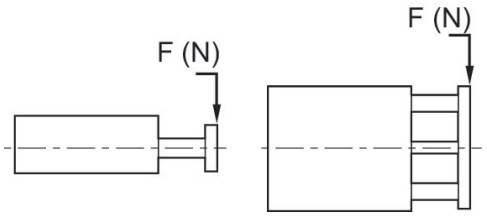

Permissible static moment M [Nm]

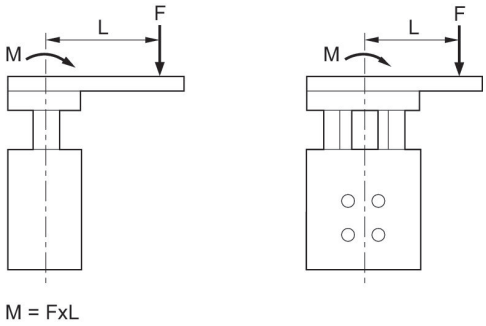

M = FxL

GPC combinations

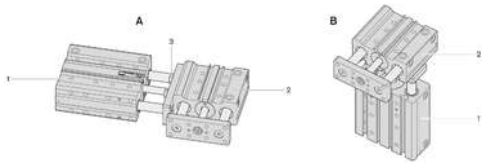

1) Cylinder 1
2) Cylinder 2
3) Screw

Overview drawing

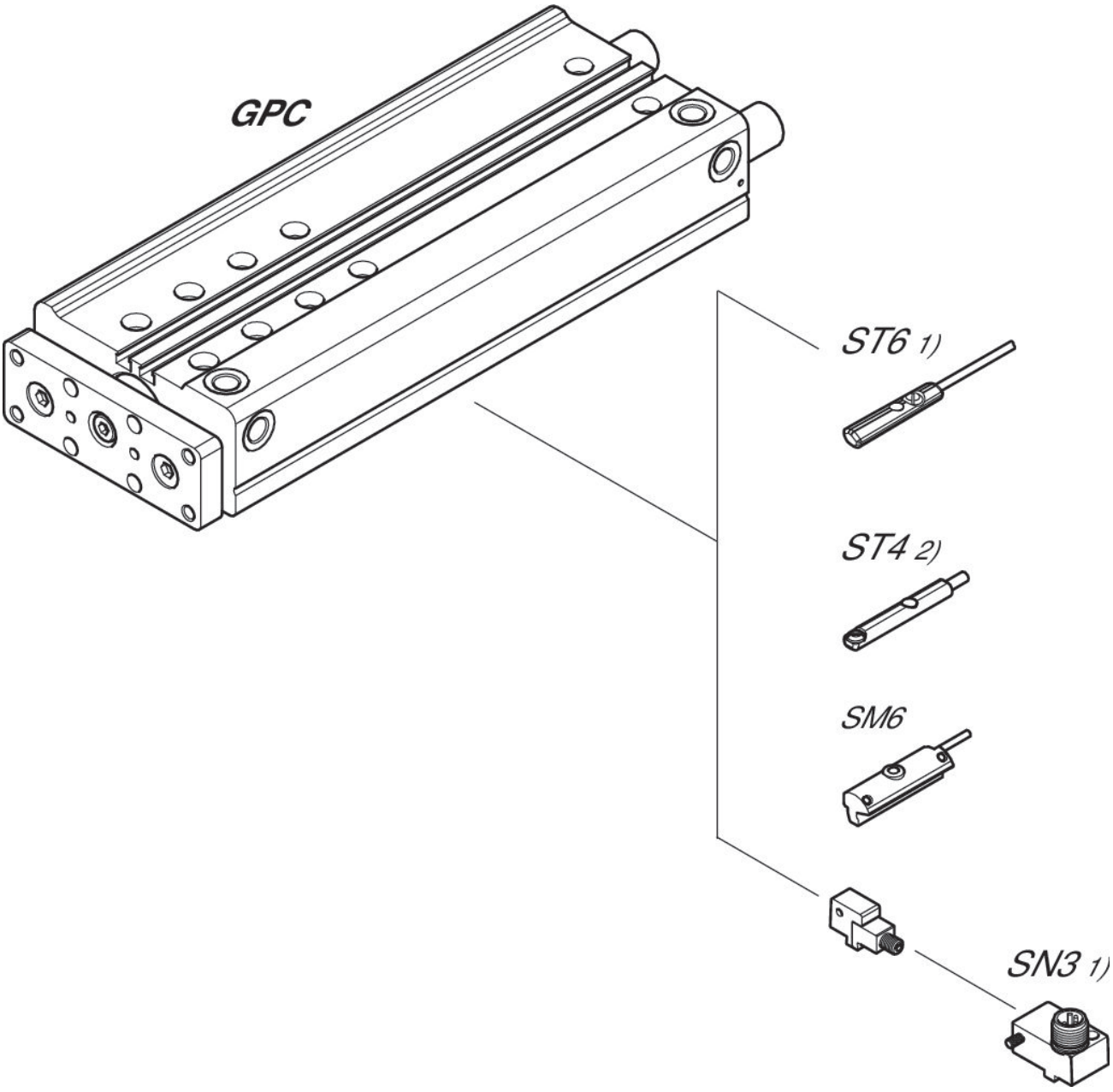

1) ≤ Ø12 mm (GPC-BV, GPC-E, GPC-TL)
2) Only for Ø10 mm (GPC-BV) and all Ø (GPC-ST)
NOTE: This overview drawing is only for orientation to indicate where the various accessory parts can be fastened to the cylinder. The illustration has been simplified for this purpose. It is thus not possible to derive the dimensions from this overview.