SCHAEFFLER

Cylindrical roller bearings NJ208-E-XL-TVP2 (Series NJ2..-E)

main dimensions to DIN 5412-1, semi-locating bearing, separable, with cage

The datasheet is only an overview of dimensions and basic load ratings of the selected product. Please always observe all the guidelines in these overview pages. Further information is given on many products under the menu item "Description". You can also order comprehensive information via the Catalogue selection system (https://www.schaeffler.de/content.schaeffler.de/en/news_media/index.jsp) or by telephone on +49 (91 32) 82 - 28 97.

d	40	mm
D	80	mm
B	18	mm
D_1	68,3	mm
d_1	54	mm
$D_{a\ max}$	73	mm
$d_{a\ max}$	49	mm
$d_{a\ min}$	47	mm
$d_{c\ min}$	56	mm
E	71,5	MM
F	49,5	mm

$r_{1\ min}$	1,1 mm	
$r_{a\ max}$	1 mm	
r_{min}	1,1 mm	
s	1 mm	Axial displacement facility from central position

	HJ208-E	Designation, L-section ring
m	0,389 kg	Mass
C_r	63000 N	Basic dynamic load rating, radial
C_{0r}	53000 N	Basic static load rating, radial
C_{ur}	8500 N	Fatigue limit load, radial
n_G	10900 1/min	Limiting speed
$n_{\vartheta r}$	7500 1/min	Reference speed

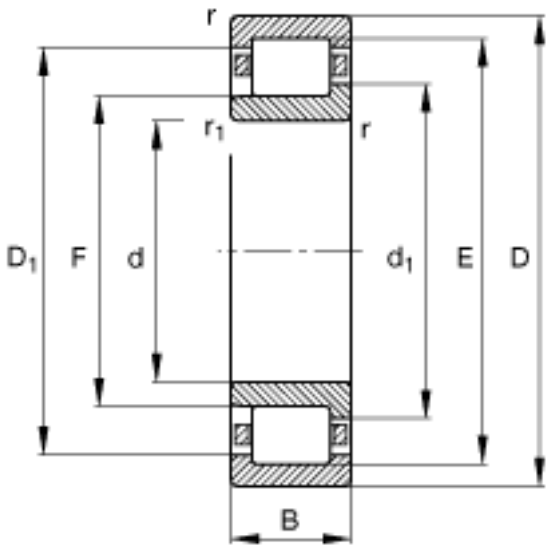
r
r1
r
D1
F
d
d1
E
D
B

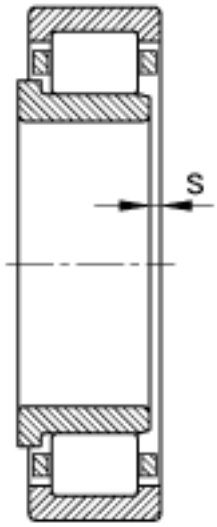
S

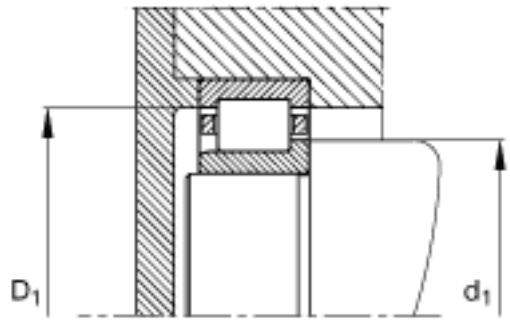
D1
d1

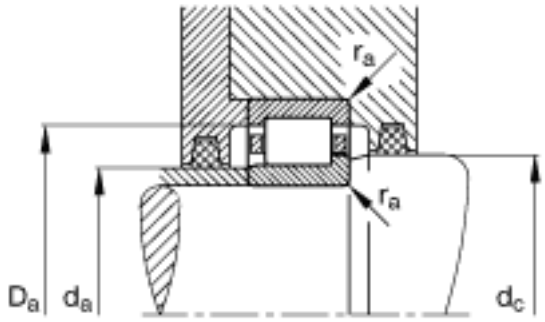
ra
ra
Da
da
dc