Product datasheet

Specifications



inductive sensor XS6 M18 - L72mm - brass - Sn12mm - 12..48VDC - M12

XS618B4NAM12

XS618B4NAM12 has not been replaced. Please contact your customer care centre for more information.

Discontinued

Main

Range of product	Telemecanique Inductive proximity sensors XS
Series name	General purpose
Sensor type	Inductive proximity sensor
Device application	Mobile equipment
Sensor name	XS6
Sensor design	Cylindrical M18
Size	72 mm
Body type	Fixed
Detector flush mounting acceptance	Non flush mountable
Material	Metal
Type of output signal	Discrete
Wiring technique	3-wire
[Sn] nominal sensing distance	12 mm
Discrete output function	1 NO
Output circuit type	DC
Discrete output type	NPN
Electrical connection	Male connector M12, 4 pins
[Us] rated supply voltage	12...48 V DC with reverse polarity protection
Switching capacity in mA	<= 200 mA DC with overload and short-circuit protection
IP degree of protection	IP67 conforming to IEC 60529 IP69K conforming to DIN 40050

Complementary

Thread type	M18 x 1
Detection face	Frontal
Front material	PPS
Enclosure material	Nickel plated brass
Sensing range	> 8...15 mm

Disclaimer: This documentation is not intended as a substitute for and is not to be used for determining suitability or reliability of these products for specific user applications

Operating zone	0…9.6 mm
Differential travel	1...15% of Sr
Status LED	Output state: 1 LED (yellow)
Supply voltage limits	10…58 V DC
Switching frequency	<= 1000 Hz DC
Maximum voltage drop	<2 V (closed)
Current consumption	<= 10 mA no-load
Maximum delay first up	10 ms
Maximum delay response	0.3 ms
Maximum delay recovery	0.7 ms
Marking	CE
Threaded length	44 mm
Length	72 mm
Net weight	0.04 kg

Environment

Product certifications	CSA E2 UL
Ambient air temperature for operation	-25…70 °C
Ambient air temperature for storage	-40…85 °C
Vibration resistance	25 gn amplitude = +/- 2 mm (f = 10…55 Hz) conforming to IEC 60068-2-6
Shock resistance	50 gn for 11 ms conforming to IEC 60068-2-27

Packing Units

Unit Type of Package 1	PCE
Number of Units in Package 1	1
Package 1 Weight	58.0 g
Package 1 Height	2.3 cm
Package 1 width	7 cm
Package 1 Length	10.1 cm
Unit Type of Package 2	S01
Number of Units in Package 2	11
Package 2 Weight	827.0 g
Package 2 Height	15 cm
Package 2 width	15 cm
Package 2 Length	40 cm
Package 3 Height	15 cm

Offer Sustainability

Sustainable offer status	Green Premium product
REACh Regulation	REACh Declaration
EU RoHS Directive	Pro-active compliance (Product out of EU RoHS legal scope) EU RoHS Declaration

Mercury free	Yes
RoHS exemption information	Yes
Environmental Disclosure	Product Environmental Profile
Circularity Profile	End of Life Information

Contractual warranty

Warranty	18 months

Product datasheet XS618B4NAM12

Dimensions Drawings

Dimensions

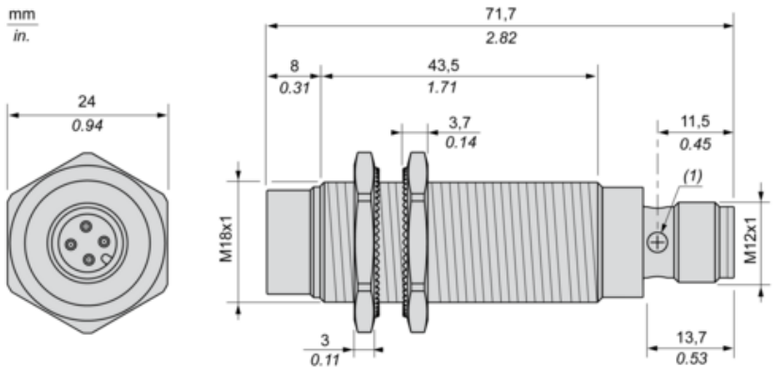

(1) : LED

Minimum Mounting Distances

Side by side

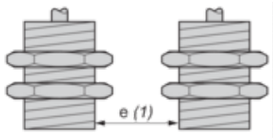

e (1) ≥ 72 mm/2.83 in.

Face to face

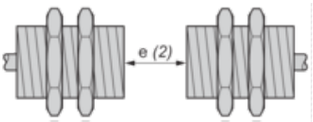

e (2) ≥ 144 mm/5.67 in.

Facing a metal object

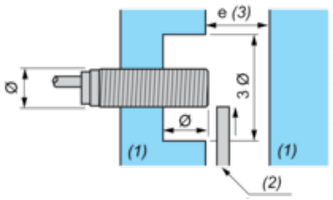

e (3) ≥ 36 mm/1.42 in

(1) Metal

(2) Object to be detected

Wiring Schemes

M12 connector



NPN

