Brand of NTN Group

Technical data

SUCP211N

Bearing units



Stainless steel cast housing,stainless steel insert ball bearing with socket set screws,seal with slinger, food grease

KIT CONTENT

SUC211, SP211N

VISUAL (S)

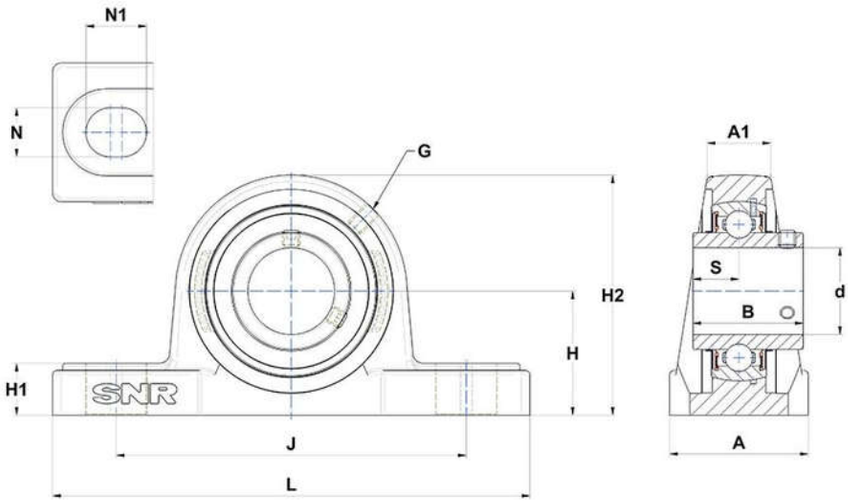

PRODUCT DEFINITION

Brand	SNR
A - Housing width	60 mm
A1 - Housing top width	33 mm
B - Width of Inner Ring	55,6 mm
d - Shaft diameter	55 mm

NTN Europe
1 rue des Usines · BP 2017 · 74010 Annecy Cedex · France · Tel. +33 (0)4 50 65 30 00
S.A. au capital de 322 639 919 € · RCS ANNECY B 325 821 072 · Id. Fiscale : FR 48 325 821 072
SIRET 325 821 072 00015 · Code APE 2815 Z · Code NACE 28.15

PRODUCT DEFINITION	
G - Grease fitting	M6x1
H - Distance mounting base to centerline spheric. seating diam.	63,5 mm
H1 - Housing foot height	23 mm
H2 - Housing height	126 mm
J - Mounting holes distance	171 mm
L - Housing length	219 mm
N - Mounting hole dimension	20 mm
N1 - Mounting hole length	25 mm
S - Distance front side/bearing centre	22,2 mm

PRODUCT PERFORMANCE	
C - Dynamic load rating	43300000 mN
C0 - Static load rating	29200000 mN
Operating temperature min.	253,15 °K
Operating temperature max.	373,15 °K

OTHER FEATURES	
Mass	4,02 kg
Recommended tightening torque for set screw	18.7 N-m