CK LOCK SWITCHES

RoHS COMPLIANT

GENERAL ELECTRICAL & MECHANICAL SPECIFICATION

Switch Rating:	150mA @ 250V ac/dc
Life:	>10,000 Cycles
Operating Temperature:	-30ºC to +85 ºC
Proof Voltage:	1,500Vac (Initial)
Insulation Resistance:	>999 MΩ at 500Vdc (Initial)
Contact Resistance:	<20mΩ (initial)
Moulding Material:	Polyamide 6.6 G.F.
Contact/Terminal Material:	Brass CZ108 Ag Plated
Lock Housing:	Zinc Alloy Bright Cr Plated
Keys:	Mild Steel Ni plated



- Made in UK.
- Moulded Single Wafer Lock switch.
- Two part construction. The lock is inserted into the panel from the front. The CK module either bracketed or snap-on, from the rear of the panel.
- Switch indexed 30º, 60º or 90º.
- All contacts are non-shorting (BBM).
- Solder or printed circuit terminals.
- Keys removable at 60º or 90º angles.
- Two keys per lock. Additional keys to order.
- Keys to pass (common combination) or differ (different combinations)

CKL Lock switch with bracketed CK Module

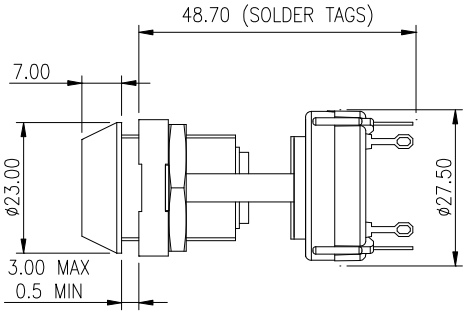

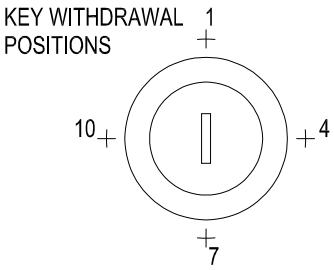

DESCRIPTION
LOCK TYPE: 8 Disc with built-in anti-pick system.
LOCK MOVEMENT: 90º Steps.
LOCK COMBINATIONS: 2000 differs or all to pass (same key for all locks).

KEY TYPE: Flat, double entry (key can be inserted into the lock either way up).
MASTER KEY SYSTEM AVAILABLE: Yes.
MAXIMUM PANEL THICKNESS: 3.0mm.**MODULE TYPE**: Bracketed (the switch module is fitted to a "U" shaped bracket.
MODULE INDEXING ANGLES: 30º, 60º, 90º

CK LOCK SWITCH MODULE TERMINAL LAYOUTS

(VIEWED FROM THE KEY) POSITION1

INDEXING

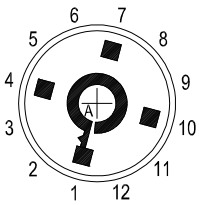

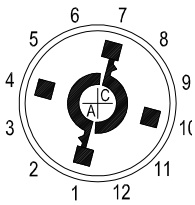

MOUNTING DETAILS CK LOCK SWITCHES

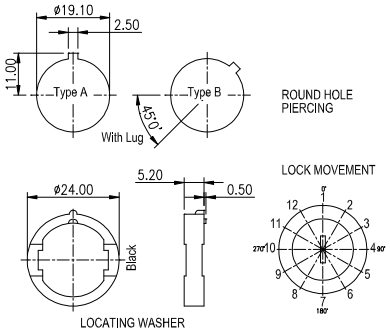

PART NUMBER	KEY CODE	CONTACT	SWITCH POSITIONS	CONTACT PLATING	TOTAL LOCK MOVEMENT	KEY WITHDRAW POSITION	SWITCH INDEX ANGLE	NUMBER OF SWITCH POLES	TERMINATION
CKL6004	Differs	BBM	2 Positions	Silver	90º	1,4	90º	2 POLE	SOLDER
CKL6014	Differs	BBM	3 Positions	Silver	180º	1,4,7	90º	1 POLE	SOLDER

Lorlin Electronics Ltd, Harwood Industrial Estate, Harwood rd, Littlehampton, W. Sussex BN17 7At England
Tel (+44) 01903 725121 Fax (+44) 01903 726808 E-mail sales@lorlin.co.uk