O6S303

Through-beam sensor transmitter

O6S-OOKG/AS/4P

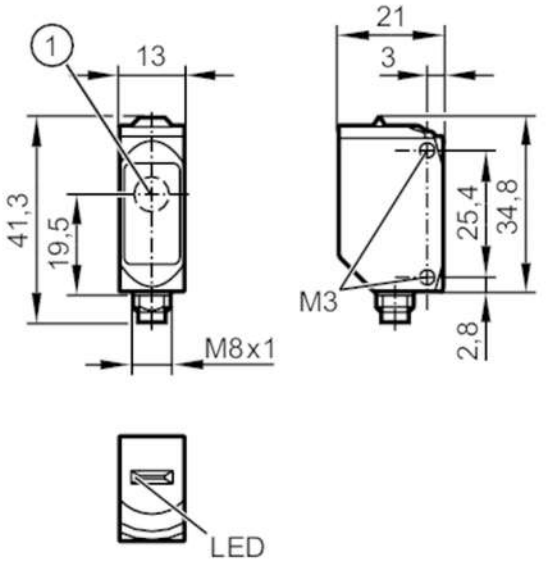

1: light emission

Product characteristics			
Type of light			red light
Housing			rectangular
Application			
Function principle			Through-beam sensor
Electrical data			
Operating voltage	[V]		10...30 DC
Current consumption	[mA]		11; ((24 V))
Protection class			III
Type of light			red light
Wave length	[nm]		633
Detection zone			
Transmitter / receiver			transmitter
Range	[m]		< 10
Max. light spot diameter	[mm]		300
Light spot dimensions refer to			at maximum range
Operating conditions			
Ambient temperature	[°C]		-25...80
Protection			IP 65; IP 67; IP 68; IP 69K
Tests / approvals			
EMC		EN 60947-5-2	
MTTF	[years]		2600
UL approval		UL Approval no.	E002
Mechanical data			
Weight	[g]		33.8

O6S303

Through-beam sensor transmitter

O6S-OOKG/AS/4P

Housing		rectangular
Dimensions	[mm]	34.8 x 13 x 21
Materials		housing: stainless steel (316L/1.4404); plastics: PPSU; Sealing: EPDM
Lens material		PMMA
Lens alignment		side lens
Tightening torque	[Nm]	1; (screws)

Displays / operating elements

Display	operation	1 x LED, green

Remarks

Remarks	operating voltage "supply class 2" according to cULus
Pack quantity	1 pcs.

Electrical connection

Connector: 1 x M8; coding: A

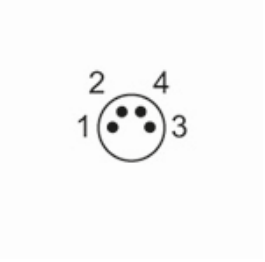

Connection

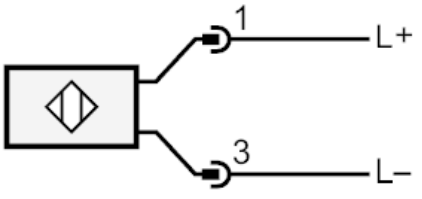

O6S303

Through-beam sensor transmitter

O6S-OOKG/AS/4P

Diagrams and graphs

excess gain graph

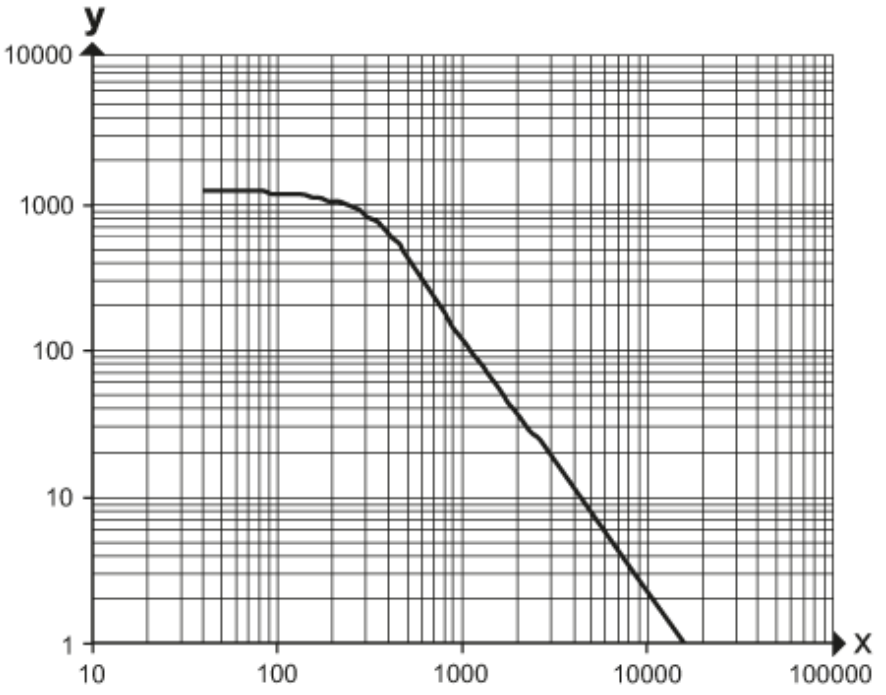

x: distance [mm]

y: excess gain factor