Shock-Safe Fuseholder, 5 x 20 mm, Slotted Cap/Fingergrip, IP 40 / IP 67, IEC 60335-1



Closed fuseholder 5 x 20 mm
slotted
black



Screw-on mounting
from front side
horizontal with finger grip
fingergrip

250 VAC · 2.5 W / 10 A (VDE) · 500 V · 16 A (UL/CSA)

See below:
Approvals and Compliances

Description

- Compact design
- Heading with fingergrip and slotted available
- Degree of protection IP67 available
- White color available on request

Applications

- Household appliances
- Medical Equipment

References

Weblinks

pdf data sheet, html datasheet, General Product Information, Distributor-Stock-Check, Accessories, Detailed request for product, Microsite

Technical Data

Shock-Safe Category	PC2
Fuse-Link	5 x 20 mm
Mounting	Panel mount, Front Side
Attachment	Fixing Nut
Terminal	Solder / Quick-Connect 4.8 x 0.5 mm
Rated Voltage	250 VAC (VDE), 500 V (UL/CSA)
Rated current	10 A (VDE), 16 A (UL/CSA)
Rated Power Acceptance IEC	2.5 W / 10 A @ Ta 23 °C Admissible power acceptance at higher ambient temperature see derating curves
Degree of Protection	IP40 / IP67
Protection Class	Suitable for appliances with protection class I acc. to IEC 61140
Admissible Ambient Temp.	-40 °C to 85 °C
Climatic Category	40/085/21 acc. to IEC 60068-1
Material: Socket	Thermoplastic, black, UL 94V-0
Material: Terminals	Copper alloy, tin-plated
Unit Weight	5.7 g
Storage Conditions	0 °C to 60 °C, max. 70% r.h.
Product Marking	SCHURTER, Type, Rated Voltage, Rated current, Power Rating, Certification marks

Soldering Methods	Iron Soldering Profile
Solderability	350 °C / 3 sec acc. to IEC 60068-2-20, Test Ta, method 2
Resistance to Soldering Heat	350 °C / 10 sec acc. to IEC 60068-2-20, Test Tb, method 2
Contact Resistance	≤ 10 mΩ at 100 mA acc. to IEC 60127-6
Dielectric Strength	> 3 kV between live parts
Impulse Withstand Voltage	> 4 kV between live parts
Insulation Resistance	≥ 10 MΩ between live parts (500 VDC: 1 min)
Overvoltage Category	III acc. to IEC 60664-1
Pollution Degree	3 acc. to IEC 60664-1
Resistance to Vibration	acc. to IEC 60068-2-6, test Fc
Admissible Torque on Fixing Nut	max 1.2 Nm
Panel Thickness	max 6 mm

Approvals and Compliances

Detailed information on product approvals, code requirements, usage instructions and detailed test conditions can be looked up in Details about Approvals

SCHURTER products are designed for use in industrial environments. They have approvals from independent testing bodies according to national and international standards. Products with specific characteristics and requirements such as required in the automotive sector according to IATF 16949, medical technology according to ISO 13485 or in the aerospace industry can be offered exclusively with customer-specific, individual agreements by SCHURTER.

Approvals

The approval mark is used by the testing authorities to certify compliance with the safety requirements placed on electronic products.

Approval Reference Type: FPG1

Approval Logo	Certificates	Certification Body	Description
	VDE Approvals	VDE	VDE Certificate Number: 127216
	UL Approvals	UL	UR File Number: E39328
	KTL Approvals	KTL	Korea Testing Laboratory

Product standards

Product standards that are referenced

Organization	Design	Standard	Description
IEC	Designed according to	IEC 60127-6	Miniature fuses. Part 6. Fuse-holders for miniature fuse-links
UL	Designed according to	UL 4248-1	Industrial Control Equipment
CSA Group	Designed according to	CSA C22.2 no. 4248.1	Industrial Control Equipment

Application standards

Application standards where the product can be used

Organization	Design	Standard	Description
IEC	Suitable for applications acc.	IEC/UL 62368-1	Audio/video, information and communication technology equipment - Part 1: Safety requirements
IEC	Suitable for applications acc.	IEC 60335-1	Safety of electrical appliances for household and similar purposes. Meets the requirements for appliances in unattended use. This includes the enhanced requirements of glow wire tests acc. to IEC 60695-2-11 or -12 & -13.

Compliances

The product complies with following Guide Lines

Identification	Details	Initiator	Description
CE	CE declaration of conformity	SCHURTER AG	The CE marking declares that the product complies with the applicable requirements laid down in the harmonisation of Community legislation on its affixing in accordance with EU Regulation 765/2008.
UKCA	UKCA declaration of conformity	SCHURTER AG	The UKCA marking declares that the product complies with the applicable requirements laid down in the British Amendment of Regulation (EC) 765/2008.
RoHS	RoHS	SCHURTER AG	Directive RoHS 2011/65/EU, Amendment (EU) 2015/863
	China RoHS	SCHURTER AG	The law SJ / T 11363-2006 (China RoHS) has been in force since 1 March 2007. It is similar to the EU directive RoHS.
REACH	REACH	SCHURTER AG	On 1 June 2007, Regulation (EC) No 1907/2006 on the Registration, Evaluation, Authorization and Restriction of Chemicals 1 (abbreviated as "REACH") entered into force.
	White Paper Glow wire test	SCHURTER AG	Meets the requirements of IEC 60335-1 for appliances in unattended use. This includes the enhanced requirements of glow wire tests acc. to IEC 60695-2-11 or -12 &-13.

Dimension [mm]

41.5 mm

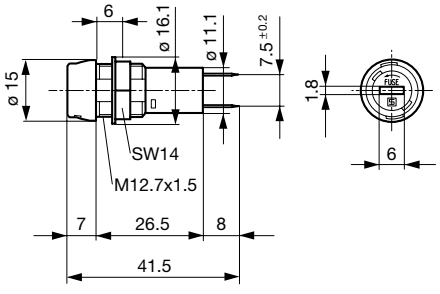

IP40 / Variants 3101.0010 and 3101.0210

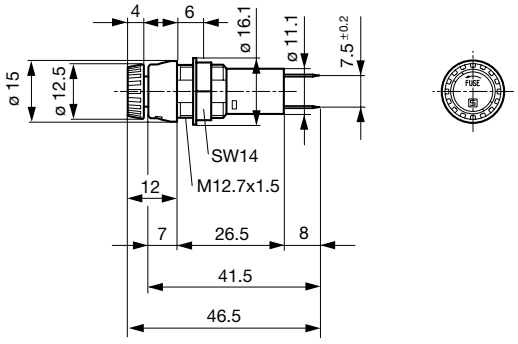

IP40 / Variants Fingergrip 3101.0015 and 3101.0215

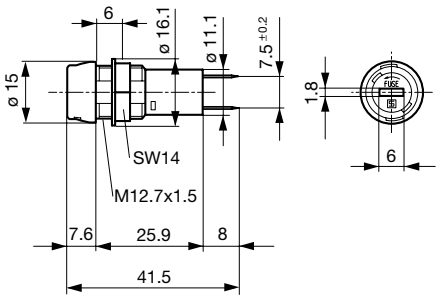

IP67 / Variants 3101.0110 and 3101.0310

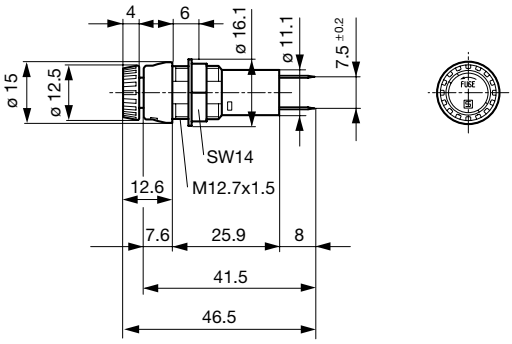

IP67 / Variants Fingergrip 3101.0115 and 3101.0315

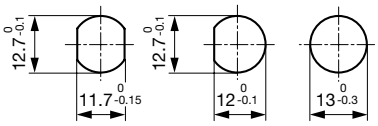

Panel cut-out

Derating Curves

acc. to IEC

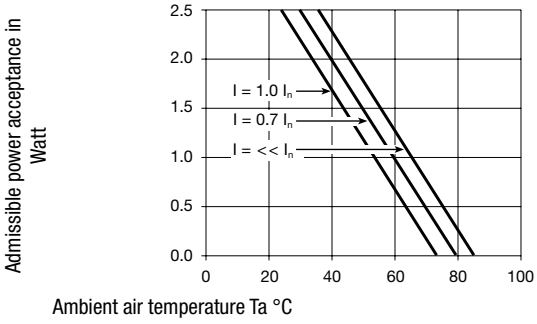

All Variants

Holder	Cap	Terminal	Degree of Protection	Material	Remark	Order Number
●	slotted	Solder	IP40	Thermoplastic	-	3101.0010
●	slotted	Quick-Connect 4.8 x 0.5 mm	IP40	Thermoplastic	-	3101.0210
●	Fingergrip	Solder	IP40	Thermoplastic	-	3101.0015
●	Fingergrip	Quick-Connect 4.8 x 0.5 mm	IP40	Thermoplastic	-	3101.0215
●	slotted	Solder	IP67	Thermoplastic	-	3101.0110
●	slotted	Quick-Connect 4.8 x 0.5 mm	IP67	Thermoplastic	-	3101.0310
●	Fingergrip	Solder	IP67	Thermoplastic	-	3101.0115
●	Fingergrip	Quick-Connect 4.8 x 0.5 mm	IP67	Thermoplastic	-	3101.0315

Most Popular.

Availability for all products can be searched real-time: https://www.schurter.com/en/info-center/support-tools/stock-check-distributors

Packaging Unit Bulk 186 x 91 x 91 mm (100 pcs.)

Accessories

	Description
	Nut_for_fuse_holder Mounting accessories for fuse holder
	Designation_plates_for_fuse_holders Marking plate for Fuseholders

The specifications, descriptions and illustrations indicated in this document are based on current information. All content is subject to modifications and amendments. Information furnished is believed to be accurate and reliable. However, users should independently evaluate the suitability and test each product selected for their own applications.