E12661

Connection cable

VDOAX050MSS0002H05STGH005MSS

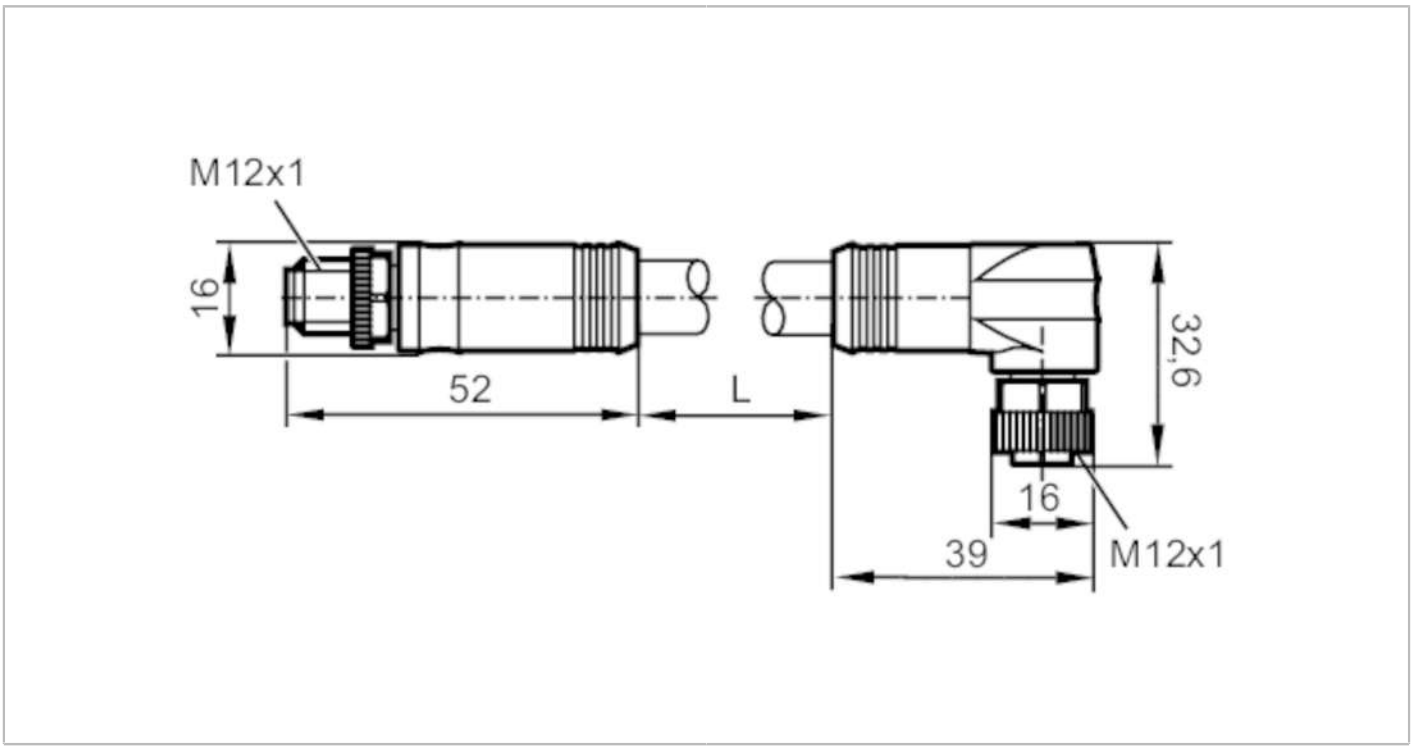

Application		
Special feature		Gold-plated contacts
Design		power cable, L-coded
Electrical data		
Operating voltage	[V]	64 DC
Max. current load total	[A]	16
Operating conditions		
Ambient temperature	[°C]	-40...90
Protection		IP 67
Mechanical data		
Weight	[g]	479
Materials		PP
Moulded-body material		TPE
Material nut		brass, nickel-plated
Remarks		
Pack quantity		1 pcs.

E12661

Connection cable

VDOAX050MSS0002H05STGH005MSS

Electrical connection

Cable: 2 m, PUR, black, Ø 11.3 mm; 5 x 2.5 mm²

Electrical connection - plug

Connector: 1 x M12, straight; coding: L; Moulded body: TPE; Locking: brass, nickel-plated; Contacts: gold-plated



Electrical connection - 2

Connection

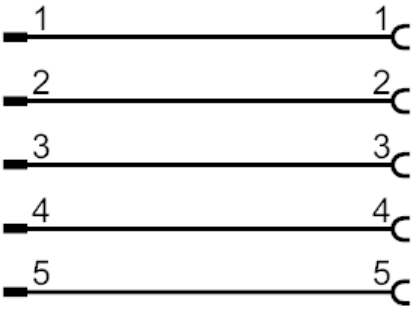

Electrical connection - socket

Connector: 1 x M12, angled; coding: L; Moulded body: TPE; Locking: brass, nickel-plated; Contacts: gold-plated

