E11624

Wirable plug

SSTGH040MSSFKPG

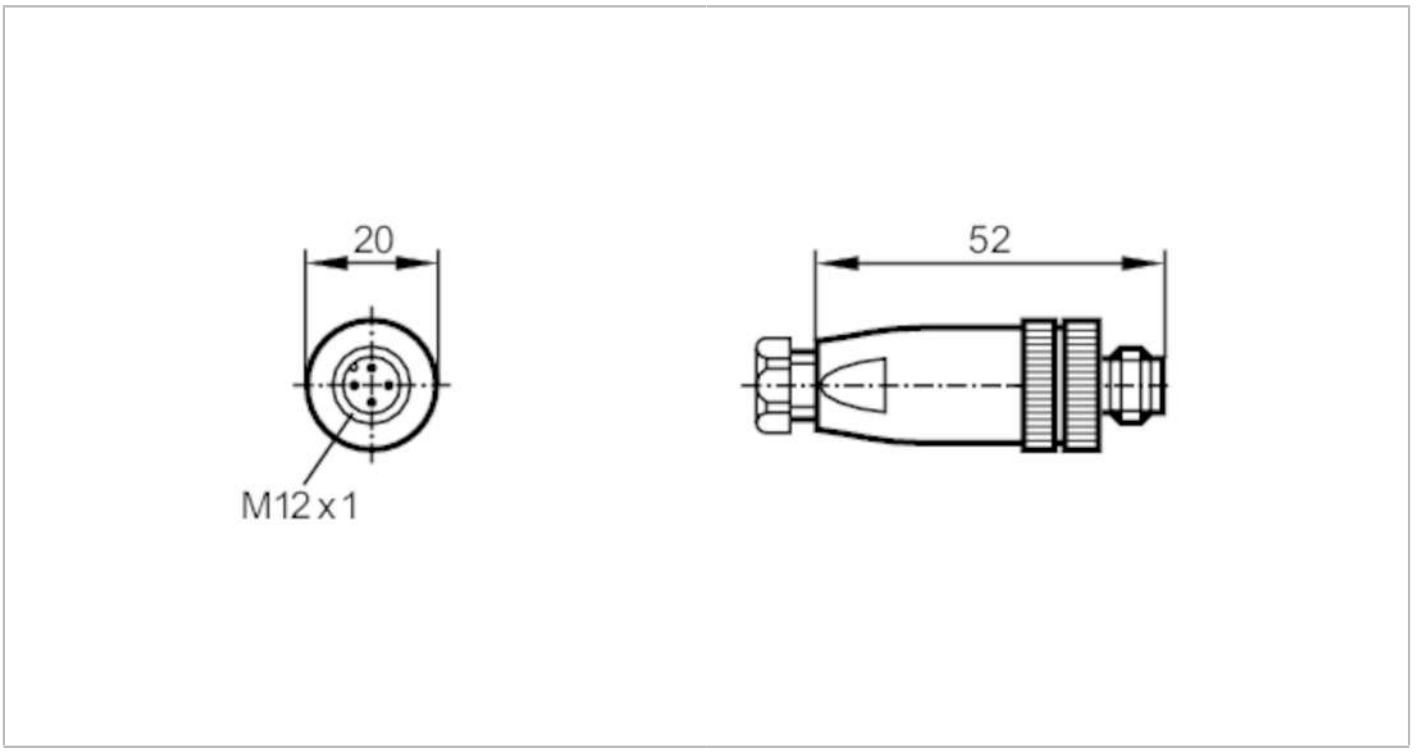

Application		
Special feature		Free from silicone; Gold-plated contacts
Free from silicone		yes
Electrical data		
Operating voltage	[V]	< 250 AC/DC
Max. current load total	[A]	4; (...40 °C)
Operating conditions		
Ambient temperature	[°C]	-25...100
Protection		IP 68
Mechanical data		
Weight	[g]	25.5
Dimensions	[mm]	20 x 20 x 52
Materials		PA
Moulded-body material		PA
Material nut		brass, nickel-plated
Remarks		
Pack quantity		1 pcs.

E11624

Wirable plug

SSTGH040MSSFKPG

Electrical connection

screw terminals: ...0.75 mm²; Cable sheath: Ø 6...8 mm

Electrical connection - plug

Connector: 1 x M12, straight; coding: A; Moulded body: PA; Locking: brass, nickel-plated; Contacts: gold-plated



Connection

