Speed setting via control voltage or PWM signal

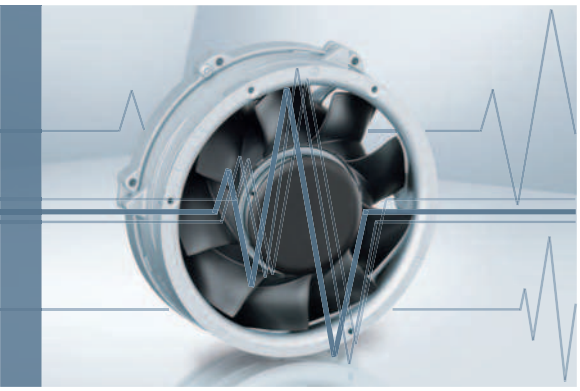

– The control variable is a PWM signal or analog control voltage.

Speed setting via analog control voltage type A

– Standard control range 0...10 V

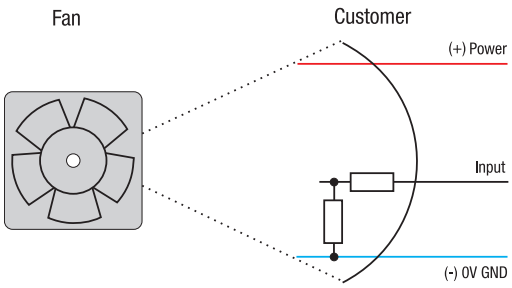

Typical input resistance > 10 k

Speed setting via PWM type P

– Standard PWM signal in two versions
  a) PWM frequency, mainly 1...10 kHz (0-100%), Open-collector input
  b) Four-wire interface according to Intel specifications for 12 VDC fans, PWM frequency 25 kHz, incl. speed signal /2

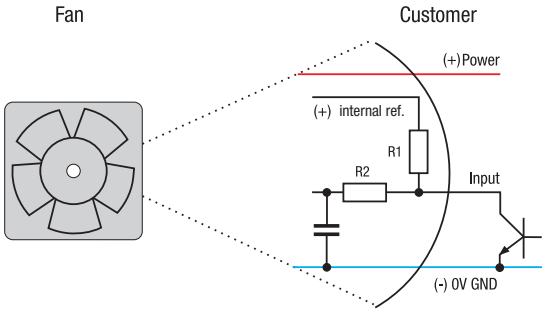

– Optional with potentiometer

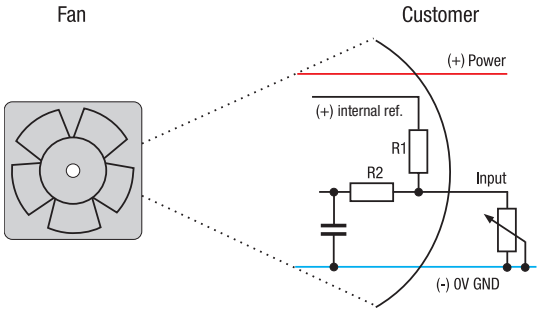

Internal reference = + 5 V
R1 typical 4.7...10 kΩ
R2 typical 100 kΩ

Standard P / A curve

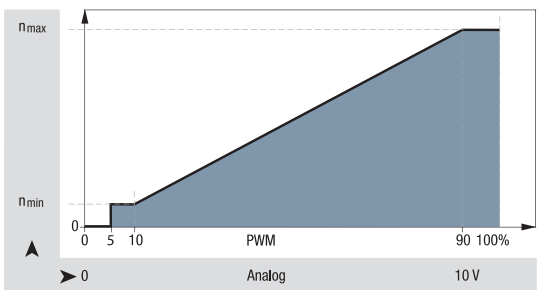

Optionally available with selectable P / A speed curve

