Your Global Automation Partner

TURCK





Sensors Catalog
Linear, Angular, Rotary

A Global Leader in Industrial Automation

Turck's sensors, connectivity, and fieldbus technology products are built to be the best. As one of the most **prominent** sensor manufacturers **in the world**, we even back our sensors with a **lifetime warranty**. Turck works by bringing **rugged engineering** solutions to your industrial automation applications.

85,000+ SOLUTIONS

50+ YEARS OF INNOVATION

2,000+ EXPERIENCED SALES REPRESENTATIVES

Pioneer in non-contact **sensing** technology

Developed innovative **connectivity** solutions in response to our customers' needs

Recognized the need for advanced **I/O solutions** in harsh duty environments



SUPPORT & DEDICATED SERVICE

EXTENSIVE WARRANTY

Strategically placed manufacturing facilities in the **USA** with **30** GLOBAL SUBSIDIARIES

4,000+ APPLICATION EXPERTS

GLOBAL BUT LOCAL...

60 representations worldwide

RESPOND and SOLVE over **1,200** inquiries per day

TABLE OF CONTENTS

Product Overview	**A**
Linear Position Technology	**B**
Angular Position Technology	**C**
Rotary Position Technology – Inductive	**D**
Rotary Position Technology – Incremental Encoders	**E**
Rotary Position Technology – Absolute Encoders	**F**
Rotary Position Technology – Encoder Accessories	**G**
Connectivity	**H**
General Information – Encoders	**I**
Warranty Terms and Conditions	**J**

We reserve the right to make technical alterations without prior notice.

Table of Contents

TABLE OF CONTENTS/WHAT'S NEW			**A**
LINEAR POSITION TECHNOLOGY			
Q-track™			
QR14 Miniature Series	Standard Resolution	Analog Output (U/I)	**B2**
Q17 Compact Series	Standard Resolution	Analog Output (U/I)	**B4**
Q25 E Series	Enhanced Resolution	Analog Output (U/I)	**B6**
Q25 HE Series	Enhanced Resolution	SSI Interface	**B8**
Q25 E Series	Enhanced Resolution	IO-Link Compatible	**B10**
Q-Track Accessories			**B12**
EZ-track®			
Analog Profile Series	Q21(R)/Q35(R)		**B15**
Quadrature Profile Series	Q21-DQ/Q35-DQ		**B17**
Digital Profile Series	Q21D/Q35D		**B19**
Profile Series Accessories			**B21**
Rod Series	R10		**B23**
Rod Series Accessories			**B27**
Glossary of Terms			**B29**
Linear Magnetic Position System			
	LM-2/LMT-2	Incremental	**B30**
	LM-5/LMT-5	Incremental	**B33**
	LMA-1	Incremental	**B36**
	LMA-4	Incremental	**B41**
Draw Wire Assemblies			
Miniature	DW33	Analog Output	**B44**
	DW55	Analog or Encoder Output	**B48**
Precision	DW70	Analog or Encoder Output	**B56**
	DW110	Analog or Encoder Output	**B62**
	DW155	Analog or Encoder Output	**B70**
	DW135	Analog or Encoder Output	**B78**
Robust	DW60	Analog or Encoder Output	**B86**
	DW120	Analog or Encoder Output	**B93**
Versatile	DW75	Analog or Encoder Output	**B100**
	DW108	Analog or Encoder Output	**B106**
	DW124	Analog or Encoder Output	**B113**
Standard	DW125	Encoder Output	**B118**
Mini Measurement System	WE-1	Incremental Output	**B123**
Draw Wire Accessories			**B124**

We reserve the right to make technical alterations without prior notice.

Turck Inc. | 3000 Campus Drive, Minneapolis, MN 55441 | T +1 800 544 7769 | F +1 763 553 0708 | www.turck.com

Table of Contents

ANGULAR POSITION TECHNOLOGY

Inclinometers

General Information		**C2**
Inclinometers		**C4**
Accessories		**C6**

ROTARY POSITION TECHNOLOGY – INDUCTIVE

General Information		**D2**
QR14		**D3**
QR20		**D5**
QR14/QR20 Accessories		**D7**
QR24		**D8**
QR24 Accessories		**D13**
DSU35		**D15**

ROTARY POSITION TECHNOLOGY – INCREMENTAL ENCODERS

Miniature - Shaft/Hollow Shaft

Miniature	Type RI-01/RI-02	**E2**
Miniature Compact	Type RI-04/RI-05	**E5**
Miniature Economy	Type RI-08/RI-09	**E8**

Incremental Encoders - Standard Shaft/Hollow Shaft

Compact	Type RI-10/RI-12	**E11**
SinCos	Type RI-60/RI-61	**E19**
Stainless Steel	Type RI-65/RI-96	**E23**
High Resolution	Type RI-16/RI-64	**E27**
Large Bore	Type RI-43	**E32**
Wave Forms		**E38**

Magnetic Ring Encoder Assemblies

	Type RMK-2	**E39**
	Type RMK-5	**E42**
Large Bore	Type RMKL-2	**E45**
Large Bore	Type RMKL-5	**E48**

ROTARY POSITION TECHNOLOGY – ABSOLUTE ENCODERS

Singleturn

Compact, Magnetic

	Type RS-06/RS-07	Analog	**F6**
	Type RS-52/RS-53	CANopen	**F11**
	Type RS-52/RS-53	SAE J1939	**F15**

Compact, Magnetic, Non Contact

	Type RMA-5	SSI	**F19**

Compact, Optical

	Type RS-44/RS-48	SSI/BiSS-C	**F22**
	Type RS-45/RS-49	CANopen	**F28**

We reserve the right to make technical alterations without prior notice.

Table of Contents

ROTARY POSITION TECHNOLOGY – ABSOLUTE ENCODERS (continued)

Standard, Optical

Type RS-24/RS-31	SSI/BiSS-C	**F32**
Type RS-25/RS-33	CANopen	**F40**
Type RS-25/RS-33	EtherCAT	**F50**
Type RS-25/RS-33	PROFIBUS®-DP	**F55**
Type RS-25/RS-33	PROFINET IO	**F60**
Type RS-107/RS-108	EtherNet/IP	**F65**

Multiturn

Compact, Magnetic

Type RM-97/RM-98	Analog	**F70**
Type RM-99/RM-100	SSI	**F75**
Type RM-101/RM-102	CANopen	**F79**
Type RM-101/RM-102	SAEJ1939	**F83**

Compact, Magnetic, Robust

Type RM-115	Analog	**F87**
Type RM-117	SSI	**F92**
Type RM-109	CANopen	**F96**
Type RM-109	SAEJ1939	**F100**

Standard, Magnetic

Type RM-116	Analog	**F104**
Type RM-118	SSI	**F109**
Type RM-121	CANopen	**F113**
Type RM-121	SAEJ1939	**F117**

Compact, Optical/Battery

Type RM-46/RM-50	SSI/BiSS-C	**F121**
Type RM-47/RM-51	CANopen	**F127**

Standard, Optical/Geared

Type RM-28/RM-35	SSI/BiSS-C	**F131**
Type RM-29/RM-36	CANopen/CANlift	**F139**
Type RM-29/RM-36	EtherCAT	**F149**
Type RM-29/RM-36	PROFIBUS-DP	**F154**
Type RM-29/RM-36	PROFINET IO	**F160**

Standard, Optical/Battery

Type RM-103/RM-104	SSI/BiSS	**F165**
Type RM-105/RM-106	CANopen	**F172**
Type RM-105/RM-106	EtherNet/IP	**F177**
Type RM-105/RM-106	Modbus	**F182**

Standard, Resolver/Geared

Type RM-89/RM-90	DeviceNet	**F187**

Large Bore

Type RA-174	SSI	**F192**

We reserve the right to make technical alterations without prior notice.

Turck Inc. | 3000 Campus Drive, Minneapolis, MN 55441 | T +1 800 544 7769 | F +1 763 553 0708 | www.turck.com

Table of Contents

ENCODER ACCESSORIES

Flex Brackets	**G2**
Torque Pins	**G8**
Torque Stop	**G8**
Couplings	**G9**
Spring Loaded Bracket	**G10**
Assembly Bell	**G10**
Servo Cleats	**G11**
Mounting Attachments	**G11**
Brackets	**G13**
Rack and Pinion	**G13**
Wheels	**G14**
Bearing Unit	**G15**

CONNECTIVITY

Cordsets

M12 Eurofast Cordsets	**H2**
M12 Eurofast LED Cordsets	**H9**
M12 Eurofast Field Wireable Connector	**H10**
M23 Multifast Cordsets	**H11**
M23 Multifast Field Wireable Connectors	**H11**
Military Cordsets	**H12**
Military Field Wireable Connectors	**H12**

GENERAL INFORMATION

Rotary Measurement Technology

Overview	**I2**
Encoders	**I5**
Incremental	**I9**
Absolute	**I17**

Linear Measurement Technology

Overview	**I24**

IP Protection Class

Table	**I25**

WARRANTY **J1**

We reserve the right to make technical alterations without prior notice.

LINEAR AND ROTARY POSITION
WHAT'S NEW?



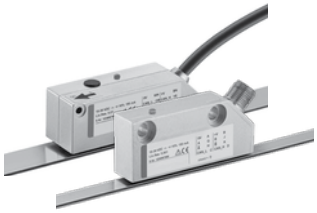

Enhanced Series Linear Sensor

Q25

- 16 bit resolution
- 100, 200, 300, 400, 500, 600, 700, 800, 900, 1000, 1250, 1500, 1750, 2000 mm measuring spans
- 5 kHz sample rate
- 200 g shock resistance, 20 g vibration resistance

Linear Magnetic Absolute Encoders

LMA-1 LMA-4

- 10-30 VDC supply voltage
- Available in SSI
- Optional SineCosine signals
- Up to 20 m maximum measuring length





New Draw Wire

DW33, 60, 70, 75, 108, 120, 124

- DW108/DW124 available with CANopen & integrated inclinometer
- New miniature series
- Configuration suggestions available for sections with installed Turck encoder

Inductive Rotary Sensor

QR20

- Sensing element can be measured externally or inside pocket
- 20, 40, 60, 90, 120, 240 or 360° measuring ranges available
- 0.5 - 4.5 V output available

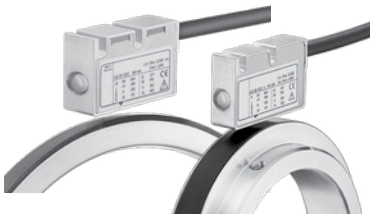

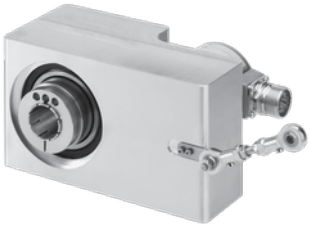

Rotary Magnetic Encoders - Incremental/Absolute

RMK-2 RMK-5 RMA-5
RMKL-2 RMKL-5

- IP rating optional up to IP69K
- Incremental output available up to 16000ppr
- Absolute output available in SSI

Large Bore Accessory

RA-174

- Bore sizes up to 45 mm
- Ordered with Turck encoder, which can include analog, incremental or absolute communication outputs
- Decoupled hollow shaft and encoder

Turck Inc. | 3000 Campus Drive, Minneapolis, MN 55441 | T +1 800 544 7769 | F +1 763 553 0708 | www.turck.com

LINEAR POSITION TECHNOLOGY

SERIES	TYPE	INTERFACE	PAGE
Q-track™			
QR14 Miniature Series	Standard Resolution	Analog Output (U/I)	**B2**
Q17 Compact Series	Standard Resolution	Analog Output (U/I)	**B4**
Q25 E Series	Enhanced Resolution	Analog Output (U/I)	**B6**
Q25 HE Series	Enhanced Resolution	SSI Interface	**B8**
Q25 E Series	Enhanced Resolution	IO-Link Compatible	**B10**
Q-track Accessories			**B12**
EZ-track			
Analog Profile Series	Q21(R)/Q35(R)		**B15**
Quadrature Profile Series	Q21-DQ/Q35-DQ		**B17**
Digital Profile Series	Q21D/Q35D		**B19**
Profile Series Accessories			**B21**
Rod Series	R10		**B23**
Rod Series Accessories			**B27**
Glossary of Terms			**B29**
Linear Magnetic Position System			
	LM-2/LMT-2	Incremental	**B30**
	LM-5/LMT-5	Incremental	**B33**
	LMA-1	Incremental	**B36**
	LMA-4	Incremental	**B41**
Draw Wire Assemblies			
Miniature	DW33	Analog Output	**B44**
	DW55	Analog or Encoder Output	**B48**
Precision	DW70	Analog or Encoder Output	**B56**
	DW110	Analog or Encoder Output	**B62**
	DW155	Analog or Encoder Output	**B70**
	DW135	Analog or Encoder Output	**B78**
Robust	DW60	Analog or Encoder Output	**B86**
	DW120	Analog or Encoder Output	**B93**
Versatile	DW75	Analog or Encoder Output	**B100**
	DW108	Analog or Encoder Output	**B106**
	DW124	Analog or Encoder Output	**B113**
Standard	DW125	Encoder Output	**B118**
Mini Measurement System	WE-1	Incremental Output	**B123**
Draw Wire Accessories			**B124**

We reserve the right to make technical alterations without prior notice.

QR14 Miniature Series, Analog Output (U/I)



Product Features

- 12 bit resolution
- Current and voltage output in one device
- M12 Eurofast connector (4-pin)
- Cable, open end
- Extreme short blind zones
- Watertight (IP68/IP69K) fully potted polycarbonate housing

Measuring Range Indicated via LED

- **Green:** The positioning element is in the measuring range.
- **Green flashing:** The positioning element is in the measuring range with a lower signal quality (e.g., the distance between sensor and element is too large).
- **Off:** The positioning element is outside the programmed range.

Measuring Range Specifications

Measuring span (A...B):	25 mm
Blind zone (a):	17 mm
Blind zone (b):	7.5 mm
Nominal distance:	1.5 mm

System

Resolution:	12 bit
Repeat accuracy:	≤ 0.025% of full scale
Linearity deviation:	≤ 1% of full scale
Temperature drift:	≤ ±0.01% / K
Ambient temperature:	-25 to +70 °C -40 to +70 °C (S97 version)

Electrical Data

Operating voltage:	15-30 VDC (LiU5) 8-30 VDC (LU4)
Residual ripple:	≤ 10% U_{PP}
No-load current:	≤ 50 mA
Isolation test voltage:	≤ 0.5 kV
Short-circuit protection:	yes
Wire breakage / reverse polarity protection:	yes/yes (supply voltage)
Output function:	analog output
Voltage output:	0-10 V (LiU5) 0.5-4.5 V (LU4)
Current output:	4-20 mA (LiU5)
Load resistance of voltage output:	≥ 4.7 kΩ
Load resistance of current output:	≤ 0.4 kΩ
Current consumption:	< 50 mA
Sampling rate:	700 Hz

Housing Style

Housing style:	rectangular, QR14
Dimensions:	53.5 x 49 x 14 mm
Housing material:	plastic, PBT-GF30-V0
Cable quality:	5.2 mm, LifYY, PVC (LiU5) 5.2 mm, Lif 32Y32Y, TPE (LU4)
Connection:	cable/cable with connector, M12 x 1
Vibration resistance:	55 Hz (1 mm)
Shock resistance:	30 g (11 ms)
Protection class (IEC 60529/EN 60529):	IP68/IP69K

LEDs

Power on indication:	green LED
Measuring range indication:	green/green flashing (multifunctional LEDs)

Miscellaneous

Included in delivery:	P1-Li-QR14/Q17L

We reserve the right to make technical alterations without prior notice.

QR14 Miniature Series, Analog Output (U/I)

Part Number Key: QR14 Series

A	B	C		D		E		F		G
LI	25	P1	-	QR14	-	LIU5X2	-	0.3-RS4	/	S97

A	Type
LI	Linear Inductive

B	Measuring Span
25	25 mm

C	Positioning Element, Floating
P1	P1-Li-QR14/Q17L*

*Operates at a distance of 0-4 mm from the sensor surface

D	Housing Style
QR14	Rectangular, 53.5 x 14 mm

E	Operating Voltage and Output Type
LU4X2	8-30 VDC, 0.5-4.5 V, 2 LEDs
LIU5X2	15-30 VDC, 4-20 mA, 0-10 V, 2 LEDs

F	Type of Connection*
0.3-RS4	Cable (0.3 m PUR) w/ M12 Eurofast Connector
(Blank)	Cable (2 m PUR)

*TPE cable for output type 'LU4X2'.

G	Specials (Optional)
S97	-40 to +70 °C Extended Temperature Range [1]

[1] Only available for output type 'LU4X2'.

Dimensions: QR14 Series

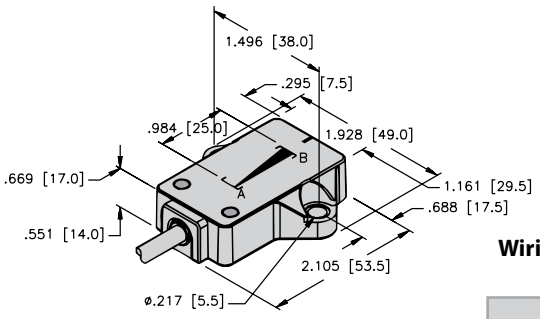

Wiring Diagram: QR14

LIU5X2 with M12 Eurofast Connection

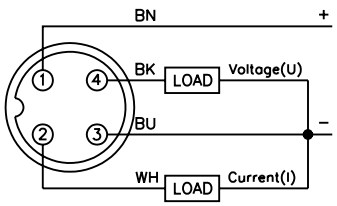

Mating Cordset: **RK 4.4T-*/S618**

Electrical Version LiU5X2

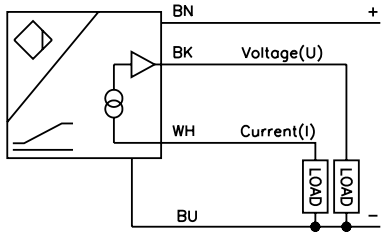

LU4X2 with M12 Eurofast Connection

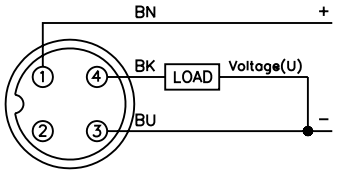

Mating Cordset: **RK 4.4T-*/S618**

Electrical Version LU4X2

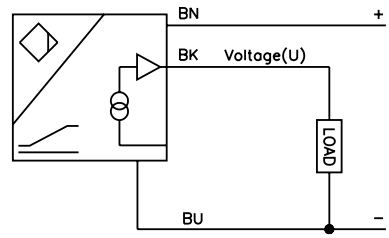

See page H1, Connectivity, for cables and connectors.

We reserve the right to make technical alterations without prior notice.

Q17L Compact Series, Analog Output (U/I)



Measuring Range Specifications

Max. measuring span:	50, 100, 150, 200, 300 mm
Blind zone (a):	22 mm
Blind zone (b):	9 mm (Li50 = 16 mm)
Nominal distance:	1.5 mm

System

Resolution:	12 bit
Repeat accuracy:	≤ 0.025% of full scale
Linearity deviation:	≤ 0.5% of full scale
Temperature drift:	≤ ±0.01 % / K
Ambient temperature:	-25 to +70 °C -40 to +70 °C (S97 version)

Electrical Data

Operating voltage:	15-30 VDC (LIU5) 8-30 VDC (LU4)
Residual ripple:	≤ 10% U_{PP}
No-load current:	≤ 50 mA
Isolation test voltage:	≤ 0.5 kV
Short-circuit protection:	yes
Wire breakage / reverse polarity protection:	yes/yes (supply voltage)
Output function:	4-wire, analog output
Voltage output:	0-10 V (LIU5) 0.5-4.5 V (LU4)
Current output:	4-20 mA (LIU5)
Load resistance of voltage output:	≥ 4.7 kΩ
Load resistance of current output:	≤ 0.4 kΩ
Current consumption:	< 50 mA
Sampling rate:	700 Hz

Housing Style

Housing style:	rectangular, Q17L
Dimensions:	20 x 16.5 mm, length L = measuring length + 32 mm, (Li50 + 38 mm)
Housing material:	plastic, PC-GF10
Cable quality:	5.2 mm, Li9YH-11YH, PUR (LiU5) 5.2 mm, Lif32Y32Y, TPE (LU4)
Connection:	cable/cable with connector, M12 x 1
Vibration resistance:	55 Hz (1 mm)
Shock resistance:	30 g (11 ms)
Protection class (IEC 60529/EN 60529):	IP67

Miscellaneous

Included in delivery:	P1-Li-QR14/Q17L (position element), M1.1-Q17L, M1.2-Q17L (mounting feet)

Product Features

- 12 bit resolution
- Current and voltage output in one device
- M12 Eurofast connector (5-pin)
- Cable, open end
- Extreme short blind zones
- Programmable measuring range
- Watertight (IP67) fully potted polycarbonate housing

Measuring Range Indicated via LED

- **Green:** The positioning element is in the measuring range.
- **Green/flashing:** The positioning element is in the measuring range with a lower signal quality (e.g., the distance between sensor and element is too large).
- **Off:** The positioning element is outside the programmed range.

Setting the Measuring Range

The initial and final value of the measuring range is set at the push of a button, either via a teach adapter or programming line (pin 5). Furthermore, the output curve can be inverted.

- Factory setting (0 V/4 mA at the connector end): Jumper pin 5 and pin 1 for 10 sec.
- Factory setting inverted: Jumper pin 5 and pin 3 for 10 sec.
- Setting the initial value: Move positioning element to desired position and jumper pin 5 and pin 3 for 2 sec.
- Setting the final value: Move positioning element to desired position and jumper pin 5 and pin 1 for 2 sec.

We reserve the right to make technical alterations without prior notice.

Q17L Compact Series, Analog Output (U/I)

Part Number Key: Q17L Series

A	B	C		D	E		F		G		H
LI	50	P1	-	Q17L	M1	-	LU4X2	-	0.3M-RS5	/	S97

A	Type
LI	Linear Inductive

B	Measuring Span
50	50 mm
100	100 mm
150	150 mm
200	200 mm
300	300 mm

C	Positioning Element, Floating
P1	P1-Li-QR14/Q17L*

*Operates at a distance of 0-4 mm from the sensor surface

D	Housing Style
Q17L	Rectangular, 16.5 x 20 mm

E	Mounting Bracket
M1	M1.1-Q17L and M1.2-Q17L

F	Operating Voltage and Output Type
LU4X2	8-30 VDC, 0.5-4.5 V, 2 LEDs
LIU5X2	15-30 VDC, 4-20 mA, 0-10 V, 2 LEDs

G	Type of Connection*
0.3M-RS5	Cable (0.3 m PUR) w/ M12 Eurofast Connector
(Blank)	Cable (2 m PUR)

*TPE cable for output type 'LU4'.

H	Specials (Optional)
S97	-40 to +70 °C Extended Temperature Range [1]

[1] Only available for output type 'LU4'.

Dimensions: Q17L Series

50, 100 mm

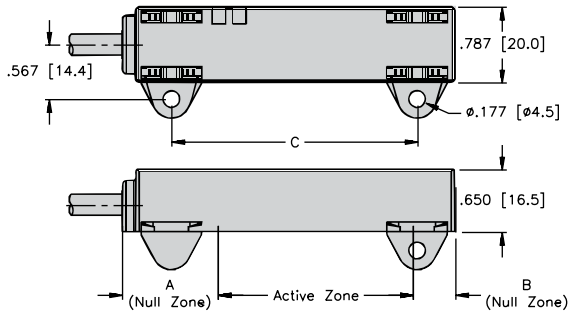

150, 200, 300 mm

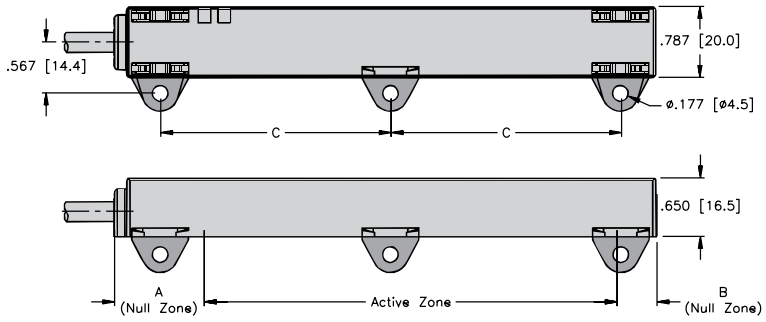

Wiring Diagram: Q17L

Electrical Version LiU5X2

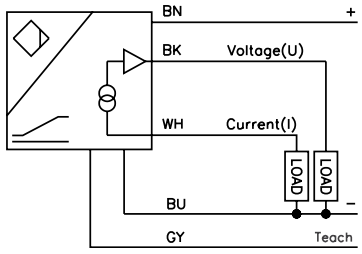

Table 1:

Measuring Range	Mounting Hole Dimensions (C)
50 mm	65 mm
100 mm	108 mm
150 mm	79 mm
200 mm	104 mm
300 mm	154 mm

See page H1, Connectivity, for cables and connectors.

LIU5X2 M12 Eurofast Connection

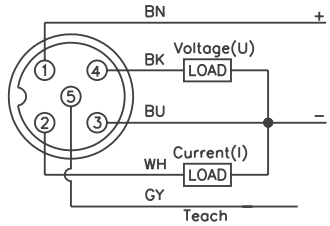

Mating Cordset: **RK 4.5T-*/S618**

Electrical Version LU4X2

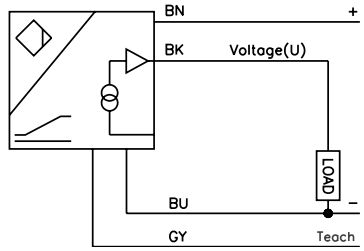

LU4X2 with M12 Eurofast Connection

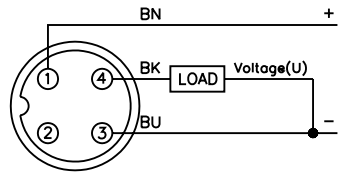

Mating Cordset: **RK 4.4T-*/S618**

* Length in meters.

We reserve the right to make technical alterations without prior notice.

E-Series with Enhanced Resolution, Analog Output (U/I)



Assembly part number:
Li200P1-Q25LM2-ELIU5X3-H1151

Measuring Range Specifications

Measuring span (L):	100, 200, 300, 400, 500, 600, 700, 800, 900, 1,000 1250, 1500, 1750, 2000 mm
Blind zone (a):	29 mm
Blind zone (b):	29 mm
Nominal distance:	1.5 mm

System

Resolution:	16 bit (measuring range in mm/65536)
Repeatability:	≤ 0.02% of full scale
Linearity deviation:	≤ 0.1% of full scale (under the influence of shock and vibration)
Temperature drift:	≤ ±0.003 %/K
Ambient temperature:	-25 to +70 °C

Electrical Data

Operating voltage:	15-30 VDC
Residual ripple:	≤ 10% U_{PP}
No-load current:	≤ 50 mA
Isolation test voltage:	≤ 0.5 kV
Short-circuit protection:	yes
Wire breakage / reverse polarity protection:	yes/yes (supply voltage)
Output function:	5-wire, analog output
Voltage output:	0-10 V
Current output:	4-20 m
Diagnostic:	output signal 24 mA or 11 V (positioning element not within detection range)
Load resistance of voltage output:	≥ 4.7 kΩ
Load resistance of current output:	≤ 0.4 kΩ
Current consumption:	< 100 mA
Sample rate:	5000 Hz

Housing Style

Housing style:	rectangular, Q25L
Dimensions:	profile 35 x 25 mm, L = measuring range + 58 mm
Housing material:	aluminum
Material active face:	plastic, PA6-GF30
Connection:	connector, M12 x 1
Vibration resistance (EN 60068-2-6):	20 g; 1.25 h/axis; 3 axis
Shock resistance (EN 60068-2-27):	200 g; 4 ms 1/2 sine
Protection class (IEC 60529/EN 60529):	IP67, IP66

LEDs

Power indication:	green LED
Measuring range indication:	green/yellow multifunctional LED

Product Features

- 16 bit resolution
- Current and voltage output in one device (5-wire, 15-30 VDC)
- M12 Eurofast connector (5-pin)
- 29 mm blind zones
- Programmable measuring range
- Captive and floating (0-4 mm from sensing face) position elements available
- Robust extruded aluminum housing
- Watertight (IP67) polycarbonate insert
- Multifunction LED

Measuring Range Indicated via LED

- **Green:** The positioning element is in the measuring range.
- **Yellow:** The positioning element is in the measuring range with a lower signal quality (e.g., the distance between sensor and element is too large).
- **Yellow flashing:** The positioning element is outside of the measuring range (max. range).
- **Off:** The positioning element is outside the programmed range but inside the total, non-programmed measuring length.

Setting the Measuring Range

The initial and final value of the measuring range is set at the push of a button, either via a teach adapter or programming line (pin 5). Furthermore, the output curve can be inverted.

- Factory setting (0 V/4 mA at the connector end): Jumper pin 5 and pin 1 for 10 sec.
- Factory setting inverted: Jumper pin 5 and pin 3 for 10 sec.
- Setting the initial value: Move positioning element to desired position and jumper pin 5 and pin 3 for 2 sec.
- Setting the final value: Move positioning element to desired position and jumper pin 5 and pin 1 for 2 sec.

Optional

- Teach lock/unlock: Jumper pin 5 and pin 1 for 30 sec. After 30 sec. the flashing changes to fast flashing. The teach lock is recommended in situations where it is necessary to prevent alterations of parameters.

We reserve the right to make technical alterations without prior notice.

E-Series with Enhanced Resolution, Analog Output (U/I)

Part Number Key: E-Series

A	B	C		D	E		F		G
LI	100	P0	-	Q25L	M0	-	ELIU5X3	-	H1151

A	Type
LI	Linear Inductive

B	Measuring Span
100	100 mm
200	200 mm
300	300 mm
400	400 mm
500	500 mm
600	600 mm
700	700 mm
800	800 mm
900	900 mm
1000	1000 mm
1250	1250 mm
1500	1500 mm
1750	1750 mm
2000	2000 mm

C	Positioning Element
P0	No Positioning Element
P1	P1-Li-Q25L (Captive)
P2	P2-Li-Q25L (Floating)*
P3	P3-Li-Q25L (Floating, Right Angle)*

*Operates at a distance of 0-4 mm from the sensor surface

D	Housing Style
Q25L	Rectangle, 25 x 35 mm

E	Mounting Bracket
M0	No Mounting Brackets
M1	M1-Q25L
M2	M2-Q25L
M3	M3-Q25L

F	Operating Voltage and Output Type
ELIU5X3	15-30 VDC, 4-20 mA, 0-10 V, 3 LEDs

G	Type of Connection
H1151	5-pin M12 Eurofast Connector

Dimensions: E-Series

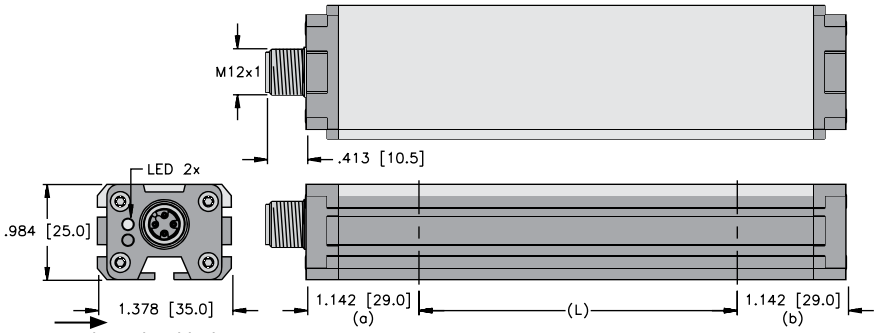

Note: Right angle cable direction

Wiring Diagram: E-Series

5-pin M12 Eurofast Connection

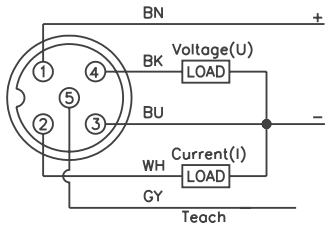

Mating Cordset: **RK 4.5T-*/S618**

* Length in meters.

See page H1, Connectivity, for cables and connectors.

Ordering Information
The Q-track linear position sensors are available in different lengths from 100 to 2,000 mm, in increments of 100 mm. The sensors, mounting accessories, and positioning elements are available individually or as a kit.

We reserve the right to make technical alterations without prior notice.

HE-Series with Enhanced Resolution and SSI Interface



Assembly part number:
Li100P2-Q25LM1-HESG25X3-H1181

Measuring Range Specifications

Measuring span (L):	100, 200, 300, 400, 500, 600, 700, 800, 900, 1,000 mm
Blind zone (a):	29 mm
Blind zone (b):	29 mm
Nominal distance:	1.5 mm

System

Resolution:	0.001 mm
Repeatability:	10 µm (0.01 mm)
Linearity deviation:	≤ 0.1% of full scale
Temperature drift:	≤ ±0.0001 % / K
Ambient temperature:	-25 to +70 °C

Electrical Data

Operating voltage:	15-30 VDC
Residual ripple:	≤ 10% U_{PP}
Isolation test voltage:	≤ 0.5 kV
Short-circuit protection:	yes
Wire breakage / reverse polarity protection:	yes/yes (voltage supply)
Output function:	8-wire, SSI, 25 bit gray code
Process data area:	bit 0.... bit 19
Diagnostic bits:	bit 21: Positioning element left the measuring range and is outside the detectable area bit 22: Positioning element is in the measuring range, lower signal quality (e.g., distance is too large) bit 23: Positioning element is outside the measuring range) bit 24: Synchronous operation active
Current consumption:	< 50 mA
Sample rate:	5 kHz

Housing Style

Housing style:	rectangular, Q25L
Dimensions:	profile 35 x 25 mm, L = measuring range + 58 mm
Housing material:	aluminum
Material active face:	plastic, PA6-GF30
Connection:	connector, M12 x 1
Vibration resistance:	55 Hz (1 mm)
Shock resistance:	30 g (11 ms)
Protection class (IEC 60529/EN 60529):	IP67

LEDs

Power indication:	green LED
Measuring range indication:	green/yellow multifunctional LED

Product Features

- Enhanced resolution (up to 20 bit) depending on sensor length
- Enhanced sample rate of 5 kHz
- Excellent temperature stability and linearity through direct digital signal transmission
- SSI interface
- M12 Eurofast connector (8-pin)
- 29 mm blind zones
- Robust extruded aluminum housing
- Watertight (IP67) polycarbonate insert
- Multifunction LED

Measuring Range Indicated via LED

- **Green:** The positioning element is in the measuring range.
- **Yellow:** The positioning element is in the measuring range with a lower signal quality (e.g., the distance between sensor and element is too large).
- **Yellow flashing:** The positioning element is outside of the measuring range (max. range).
- **Off:** The positioning element is outside the programmed range but inside the total, non-programmed measuring length.

High-Precision Digital SSI Output

SSI (synchronous serial interface) is a 4-wire data communication standard commonly used in industry to transmit position data digitally. The conductors in the cable are shielded twisted pairs that enhance EMI/RFI protection. In addition to the clock and data wires, it also has separate power wiring.

We reserve the right to make technical alterations without prior notice.

HE-Series with Enhanced Resolution and SSI Interface

Part Number Key: HE-Series / SSI

A	B	C		D	E		G		H
LI	100	P0	-	Q25L	M0	-	HESG25X3	-	H1181

A	Type
LI	Linear Inductive

B	Measuring Span
100	100 mm
200	200 mm
300	300 mm
400	400 mm
500	500 mm
600	600 mm
700	700 mm
800	800 mm
900	900 mm
1000	1000 mm

C	Positioning Element
P0	No Positioning Element
P1	P1-Li-Q25L (Captive)
P2	P2-Li-Q25L (Floating)*
P3	P3-Li-Q25L (Floating, Right Angle)*

*Operates at a distance of 0-4 mm from the sensor surface

D	Housing Style
Q25L	Rectangular, 25 x 35 mm

E	Mounting Bracket
M0	No Mounting Brackets
M1	M1-Q25L
M2	M2-Q25L
M3	M3-Q25L

G	Operating Voltage and Output Type
HESG25X3	15-30 VDC, SSI, Gray Code, 25 bit, 3 LEDs

H	Type of Connection
H1181	8-pin M12 Eurofast Connector

Dimensions: HE-Series / SSI

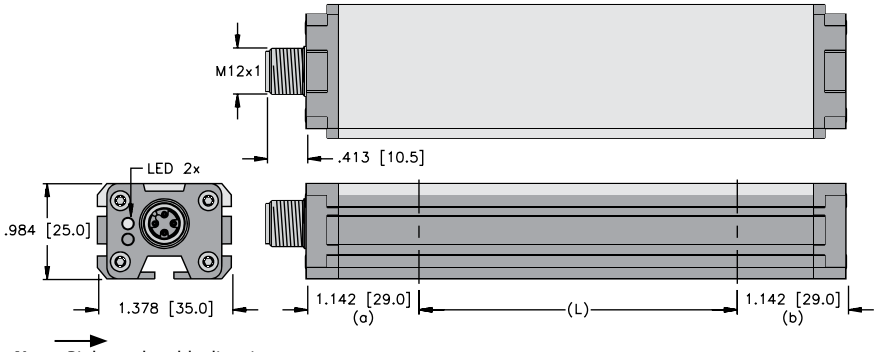

Note: Right angle cable direction

Wiring Diagram: E-Series / SSI

8-pin M12 Eurofast Connection

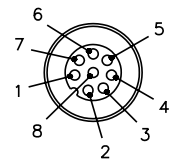

Pinouts (Color)
1. GND (WH)
2. 24 VDC (BN)
3. CLK + (GN)
4. CLK - (YE)
5. DATA + (GY)
6. DATA - (PK)
7. N/C (N/C)
8. N/C (N/C)

Mating Cordset: **E-RKC 8T-264-***

* Length in meters.

See page H1, Connectivity, for cables and connectors.

Ordering Information
The Q-track linear position sensors are available in different lengths from 100 to 1,000 mm, in increments of 100 mm. The sensors, mounting accessories, and positioning elements are available individually or as a kit.

We reserve the right to make technical alterations without prior notice.

E-Series with Enhanced Resolution, IO-Link Compatible



Assembly part number:
Li300P1-Q25LM1-ELIUPN8X3-H1151

Product Features

- Enhanced resolution of 16 bit
- Enhanced sample rate 1 kHz
- Improved linearity
- Two programmable outputs (analog output current or voltage, switching outputs, PWM) IO-Link compatible
- M12 Eurofast connector (5-pin)
- 29 mm blind zones
- Robust extruded aluminum housing
- Watertight (IP67) polycarbonate insert
- Multifunction LED

Measuring Range Specifications

Measuring span (L):	100, 200, 300, 400, 500, 600, 700, 800, 900, 1,000 mm
Blind zone (a):	29 mm
Blind zone (b):	29 mm
Nominal distance:	1.5 mm

System

Resolution:	16 bit (D/A converter and IO-Link) measuring range in mm / 65536)
Repeatability:	0.0015% (0.0015 mm per 100 mm)
Linearity deviation:	≤ 0.035% of full scale
Temperature drift:	≤ ±0.003 % / K
Ambient temperature:	-25 to +70 °C

Electrical Data

Operating voltage:	15-30 VDC
Residual ripple:	≤ 10% U_{PP}
Isolation test voltage:	≤ 0.5 kV
Short-circuit protection:	yes
Wire breakage / reverse polarity protection:	yes/yes (voltage supply)
Output function:	two programmable outputs (analog output current or voltage, switching outputs, PWM, …) IO-Link compatible Factory setting: 0-10 V on pin 2, PNP switching output on pin 4. Changes to settings via IO-Link only.
Load resistance of voltage output:	≥ 4.7 kΩ
Load resistance of current output:	≤ 0.4 kΩ
Current consumption:	< 50 mA
Sample rate:	1000 Hz

Housing Style

Housing style:	rectangular, Q25L
Dimensions:	profile 35 x 25 mm, L = measuring range + 58 mm
Housing material:	aluminum
Material active face:	plastic, PA6-GF30
Connection:	connector, M12 x 1
Vibration resistance:	55 Hz (1 mm)
Shock resistance:	30 g (11 ms)
Protection class (IEC 60529/EN 60529):	IP67

LEDs

Power indication:	green LED
Measuring range indication:	green/yellow multifunctional LED

Measuring Range Indicated via LED

- **Green:** The positioning element is in the measuring range.
- **Yellow:** The positioning element is in the measuring range with a lower signal quality (e.g., the distance between sensor and element is too large).
- **Yellow flashing:** The positioning element is outside of the measuring range (max. range).
- **Off:** The positioning element is outside the programmed range but inside the total, non-programmed measuring length.

Programming and IO-Link

Output functions, measuring ranges and alarm outputs are set via a teach adapter or programming line (pin 5). Alternatively, the sensor can also be operated in IO-Link mode. For this purpose, connect the sensor to an IO-Link compatible module. The established connection is indicated by a green flashing LED. For more information, please see the corresponding instruction manual.

We reserve the right to make technical alterations without prior notice.

E-Series with Enhanced Resolution, IO-Link Compatible

Part Number Key: E-Series / IO-Link

A	B	C		D	E		G		H
LI	100	P0	-	Q25L	M0	-	ELIUPN8X3	-	H1151

A	Type
LI	Linear Inductive

B	Measuring Span
100	100 mm
200	200 mm
300	300 mm
400	400 mm
500	500 mm
600	600 mm
700	700 mm
800	800 mm
900	900 mm
1000	1000 mm

C	Positioning Element
P0	No Positioning Element
P1	P1-Li-Q25L (Captive)
P2	P2-Li-Q25L (Floating)*
P3	P3-Li-Q25L (Floating, Right Angle)*

*Operates at a distance of 0-4 mm from the sensor surface

D	Housing Style
Q25L	Rectangular, 25 x 35 mm

E	Mounting Bracket
M0	No Mounting Brackets
M1	M1-Q25L
M2	M2-Q25L
M3	M3-Q25L

G	Operating Voltage and Output Type
ELIUPN8X3	15-30 VDC, IO-Link Configurable, 3 LEDs

H	Type of Connection
H1151	5-pin M12 Eurofast Connector

Dimensions: E-Series / IO-Link

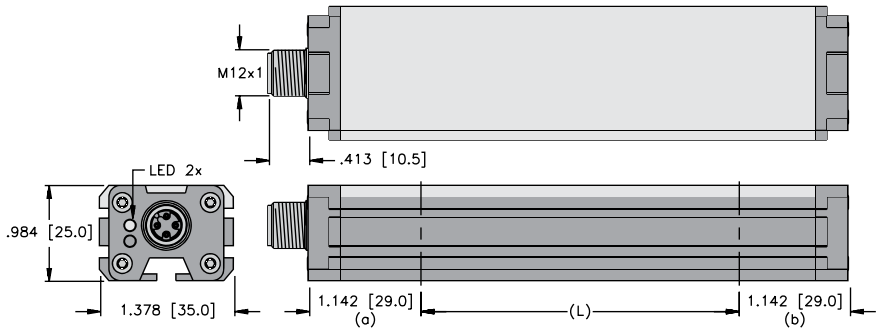

Note: Right angle cable direction

Wiring Diagram: E-Series / IO-Link

5-pin M12 Eurofast Connection

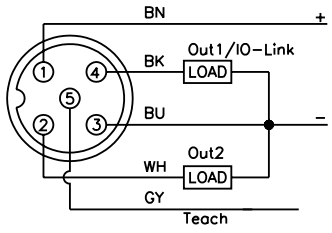

Mating Cordset: **RK 4.5T-*/S618**

* Length in meters.

Ordering Information
The Q-track linear position sensors are available in different lengths from 100 to 1,000 mm, in increments of 100 mm. The sensors, mounting accessories, and positioning elements are available individually or as a kit.

See page H1, Connectivity, for cables and connectors.

Sample Networked Communication: IO-Link Master

The following components can be used to connect a linear position sensor through IO-Link to any Turck supported network protocol:

	BL20	BL67	TBEN	BLC
1 x IO-Link Master	BL20-E-4IOL	BL67-4IOL	TBEN-*-*IOL	BLCEN-*-4IOL-*
1 x BL67 Base	N/A	BL67-B-4M12	N/A	N/A
1 x Connection Cable	RK 4.4T-*	RK 4.4T-*-RS 4.4T	RK 4.4T-*-RS 4.4T	RK 4.4T-*-RS 4.4T

Sample Configuration: IO-Link Master

The following components can be used for parameterization of a linear sensor through IO-Link:

1 x IO-Link Master	USB-2-IOL-0002
1 x Connection Cable	RK 4.5T-*-RS 4.5T

PACTware

We reserve the right to make technical alterations without prior notice.

Q-track Accessories – Position Elements



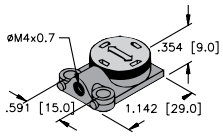

P1-Li-QR14/Q17L

Floating position element for LI-QR14 and LI-Q17L linear position sensors; transverse and longitudinal mounting possible; Nominal distance to the sensor is 1.5 mm; pairing with the linear sensor at a distance of up to 3 mm or misalignment tolerance of up to 3 mm.



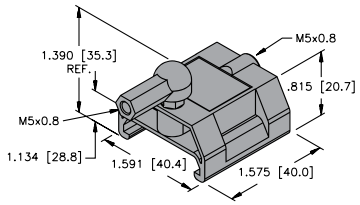

P1-Li-Q25L

Captive positioning element; laterally inserted in sensor groove; include rod-end bearing to mount M5 threaded rods.



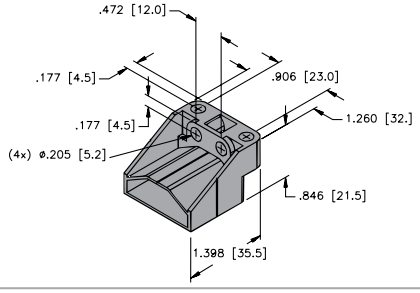

P2-Li-Q25L

Floating position element for LI-Q25L linear position sensors; Nominal distance to the sensor is 1.5 mm; pairing with the linear sensor at a distance of up to 5 mm or misalignment tolerance of up to 4 mm.



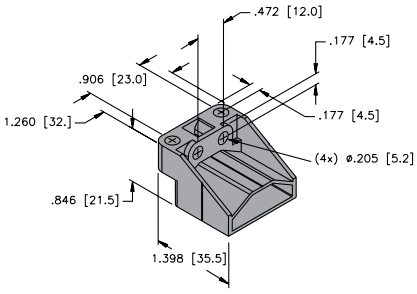

P3-Li-Q25L

Floating position element for LI-Q25L linear position sensors; operational at an offset of 90°; Nominal distance to the sensor is 1.5 mm; pairing with the linear sensor at a distance of up to 5 mm or misalignment tolerance of up to 4 mm.



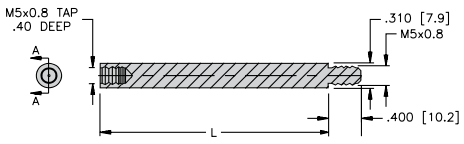

CA*E-Q21

Control arm; Can be used with **P1-Li-Q25L** and **RE-Q21** to connect the positioning element to an actuator.

* Length specified in inches.
3, 6 and 9 inches are standard lengths.
Other lengths available, consult factory for part numbers and availability.



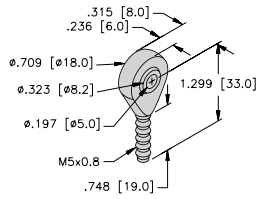

RE-Q21

Rod End; Can be used with **P1-Li-Q25L** and **CA*E-Q21** to connect the positioning element to an actuator.

We reserve the right to make technical alterations without prior notice.

Q-track Accessories – Mounting Accessories



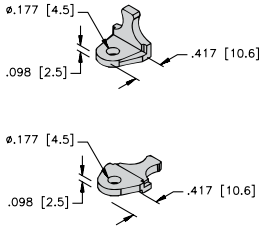

M1.1-Q17L (right angle) (3 pcs per bag)
M1.2-Q17L (straight) (3 pcs per bag)

Mounting feet for inductive linear position sensor Q17L. Each sensor is delivered with a sufficient quantity of M1.1-Q17L and M1.2-Q17L for mounting.



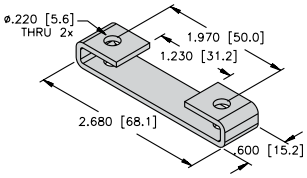

M1-Q25L

Mounting foot for LI-Q25L linear position sensors; Two mounting feet should be used for devices with a measuring range of up to 1,000 mm; Material: stainless steel; 2 pcs. per bag.



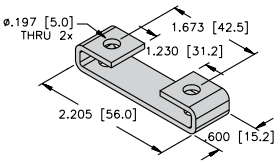

M2-Q25L

Mounting foot for LI-Q25L linear position sensors; Two mounting feet should be used for devices with a measuring range of up to 1,000 mm; Material: stainless steel; 2 pcs. per bag.

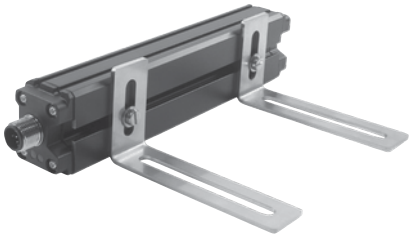

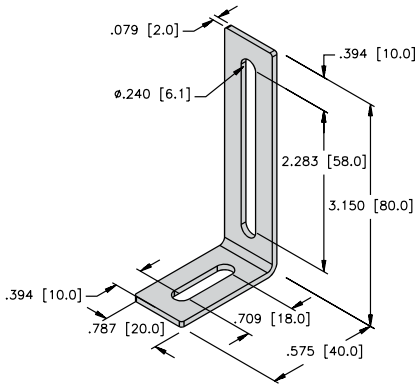

M4-Q25L

Mounting bracket for LI-Q25L linear position sensors; Two mounting feet should be used for devices with a measuring range of up to 1,000 mm; Material: stainless steel; 2 pcs. per bag.



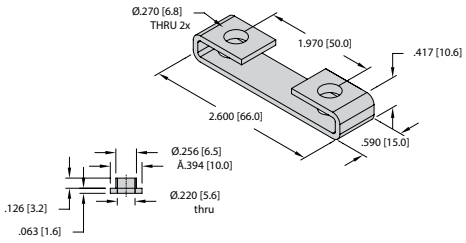

M5-Q25L

Mounting foot for LI-Q25L linear position sensors; Two mounting feet should be used for devices with a measuring range of up to 1,000 mm; Includes isolation sleeves; Material: annodized aluminum, nylon; 2 sets per bag.



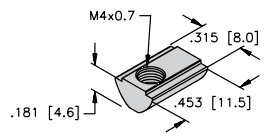

MN-M4-Q25

Sliding blocks with M4 thread for back side groove of LI-Q25L linear position sensors; Material: Brass; 10 pcs. per bag.

Only available separately, not as a kit with linear position sensors.

We reserve the right to make technical alterations without prior notice.

Q-track Accessories



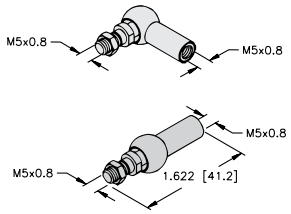

RBVA-M5
Angle joint for M5 thread, stainless steel

ABVA-M5
Axial joint for M5 thread, stainless steel



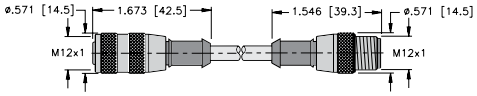

RK 4.5T-*-RS 4.4T/S3107 Cable
To convert existing wiring from EZ-track installation with current output to Q-track current output.

RK 4.5T-*-RS 4.4T/S3108 Cable
To convert existing wiring from EZ-track installation with voltage output to Q-track voltage output.



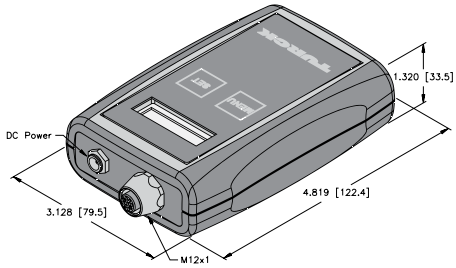

TB4 V.2
Analog test box for sensors with analog or switching outputs, incl. batteries.

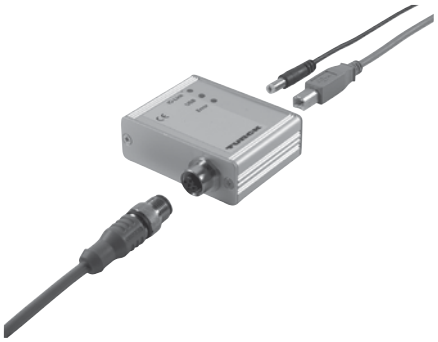

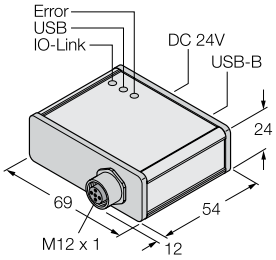

USB-2-IOL-0002
IO-Link master with integrated USB interface for parameterization of IO-Link compliant linear position sensors via PC.



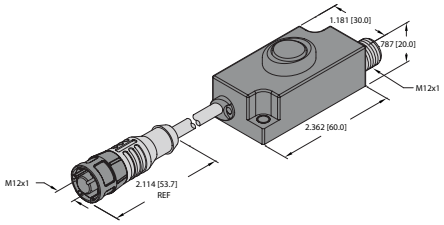

TX1-Q20L60
Teach adapter to program measuring range of inductive position sensors.

We reserve the right to make technical alterations without prior notice.

Analog Profile Series



EZ-track LDT's profile style probes use magnetostrictive technology by applying a mechanical strain pulse to a magnetostrictive waveguide that runs the length of the sensor. When the strain pulse encounters a magnetic field produced by the slide or floating magnet assembly, a current pulse is produced that is picked up by the electronic circuitry. A high speed timer measures the time difference between the applied strain pulse and the return of the induced current pulse. This time, proportional to position is compared to the "zero" and "span" positions established during the calibration process to scale the output.
Once the position has been scaled accordingly, it is converted to a signal in the form of an analog (voltage or current) output, quadrature pulse output, or digital (PWM or start/stop) outputs.

Enhanced Resolution Analog Profile Series (Q21R/Q35R) Specifications:

Output:	Current: 20 to 4 mA 4 to 20 mA	Voltage: 0 to 10 V 10 to 0 V	Differential: 0 to 10 V 4 to 20 mA
Load impedance:	≤ (voltage in - 4) ÷ 0.02 A (example: 10 VDC ≤ 300 Ω)	≥ 1000 Ω	
Q21R span: Q35R span:	4 to 180 in 5 to 36 in		
Repeatability:	+/-0.006% of full span or +/-0.002 in, whichever is greater		
Resolution:	0.001 in internal (For span lengths < 65 in); 16 bit (For lengths > 65 in)		
Non-linearity:	+/-0.05% of stroke		
Operating temperature:	-4 to +158 °F (-20 to +70 °C)		
Null zone:	3.00 in		
Dead zone:	2.00 in		
Operating voltage:	13.5-30 VDC		
Current consumption:	120 mA at 15 VDC, 2.5 watts maximum		
Response time:	≤ 50 in 1 ms 51 to 100 in 2 ms 101 to 150 in 3 ms 151 to 180 in 4 ms		
LED:	Green = Power is applied and magnet is present in the programmed range Red = Fault, magnet is in the Null Zone, Dead Zone or lost Yellow = Magnet is out of the active programmed range, but still within the active stroke area		
Protection rating:	Electronics: IP67, IP68 optional Rod housing: IP65		
Agency approval:	CE		

Standard Resolution Analog Profile Series (Q21/Q35) Specifications:

Output:	Current: 20 to 4 mA 4 to 20 mA	Voltage: +5 to -5 V 0 to +10 V -5 to +5 V +10 to 0 V 0 to +5 V -10 to +10 V +5 to 0 V +10 to -10 V
Load impedance:	≤ (voltage in - 4) ÷ 0.02 A (example: 10 VDC ≤ 300 Ω)	≥ 1000 Ω (1500 for Ω +/-100)
Q21 span: Q35 span:	4 to 180 in 5 to 36 in	
Repeatability:	+/-0.01% of full span or +/-0.014 in, whichever is greater	
Resolution:	0.014 in for stroke lengths less than 60 in; For lengths over 60 in: 12 bits	
Non-linearity:	+/-0.05% of stroke or +/-0.028 whichever is greater	
Accuracy:	+/-0.1% of stroke or +/-0.050 whichever is greater	
Operating temperature:	-40 to +158 °F (-40 to +70 °C)	
Null zone:	3.00 in	
Dead zone:	1.50 in	
Operating voltage:	10-30 VDC	
Current consumption:	100 mA (maximum)	
Response time:	50 in or less: 1 ms updates with 5 ms settling time 50 in or greater: 2 ms updates with 4 ms settling time	
LED:	Green = power is applied and magnet is present in the programmed range Red = fault, magnet is in the null zone, dead zone or lost Yellow = magnet is out of the active programmed range, but still within the active stroke area	
Protection rating:	Electronics: IP67, IP68 optional Rod housing: IP65	
Agency approval:	CE, FM Class I, Div 2	

Low Profile Extrusion Housing:
The Q21 series is housed in low profile, environmentally sealed, anodized aluminum housings. The electronics and the sensing element are incorporated into a housing that is less than 1 inch tall without the need for a can or head on the sensor to house the electronics

Diagnostic LED:
The EZ-track Series utilizes a diagnostic LED that enables the operator to understand the state of the sensor dependent upon the position of the target magnet.

The LED flashes to indicate it is in AGC mode (Q21 and Q35 series). This feature simplifies programming and troubleshooting, effectively reducing setup and maintenance time.

Various Analog Outputs
Available Profile Style:
The Q21 and Q35 series may be ordered in a variety of outputs.

Although sensors may be ordered with any of the above outputs, the units may easily be changed in the field to reverse the analog signal. Thus, one model can be used for two applications by programming the "zero" and "span" appropriately.

Automatic Gain Control:
The Automatic Gain Control (AGC) feature allows the EZ-track to sense a magnet other than the standard slide magnet and adjust to the magnetic field strength accordingly. With the ability to sense a standard floating magnet up to 3/8 inch away, the user has greater mounting flexibility for various applications.

FM Approved Installation
(Class I, Division 2):
The EZ-track Q21 unit can be ordered for use in a Class I, Division 2 environment. The unit utilizes a Lock-Euro-G.

We reserve the right to make technical alterations without prior notice.

Analog Profile Series

Part Number Key: Analog Profile Series

A	B	C		D	E		F	G	H		I		J
LT	40	E	-	Q21	R	-	LI	0	X3	-	H1151	/	S1661

A	Type
LT	Linear Transducer

B	Measuring Span
*	Length of Measuring Span

C	Housing
E	Inches

D	Housing Height
Q21	21 mm
Q35	35 mm

E	Resolution
(Blank)	Standard Resolution
R	Enhanced Resolution

F	Output Configuration
LI	Current
LU	Voltage
LD	Differential [1]

G	Output Type		
	Current	Voltage	Differential
0	4-20 mA	0 to 10 V	0 to 10 V [3]
1	20-4 mA	10 to 0 V	4 - 20 mA [3]
2		-10 to 10 V [2]	
3		10 to -10 V [2]	
4		0 to 5 V [2]	
5		5 to 0 V [2]	
6		-5 to 5 V [2]	
7		5 to -5 V [2]	

H	Number of LEDs
X3	3 Diagnostic LEDs

I	Type of Connection
H1141	4-pin M12 Eurofast Connector [2]
H1151	5-pin M12 Eurofast Connector [3]

J	Specials
(Blank)	IP67
S1661	IP68

Note: In addition to the LDT, a typical system includes a magnet, mounting feet and cable (all sold separately).

Dimensions: Q21 Analog Profile Series

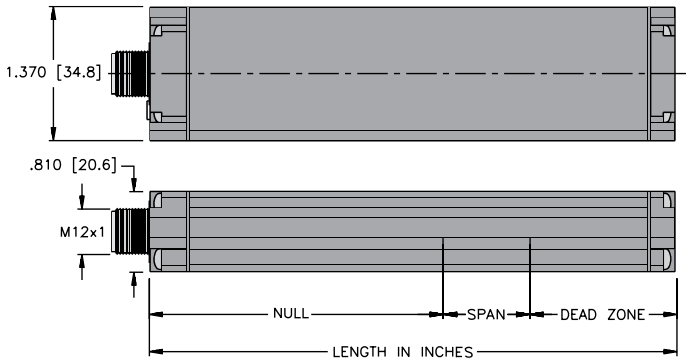

Wiring Diagrams: Q21R/Q35R Q21/Q35

5-pin Eurofast Connection	4-pin Eurofast Connection
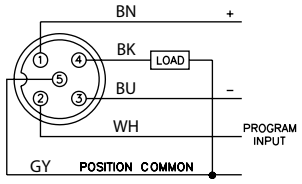	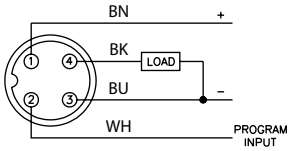
Mating Cordset: **RK 4.5T-*/S618**	Mating Cordset: **RK 4.4T-*/S618**

* Length in meters.

Dimensions: Q35 Analog Profile Series

Note: Self contained piston with magnet permantly attached

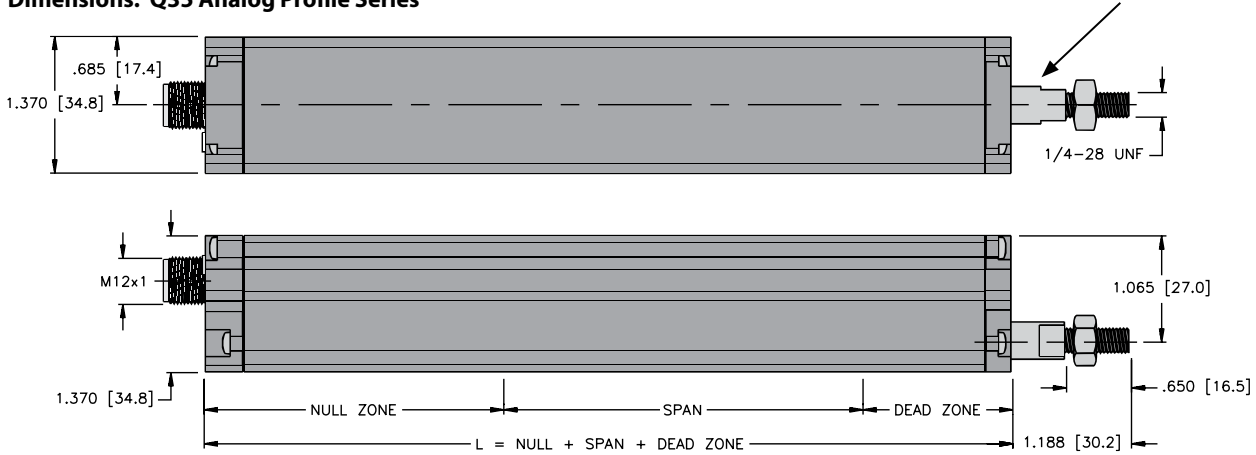

We reserve the right to make technical alterations without prior notice.

Quadrature Profile Series



Direct Quadrature Output:
Directly interface to the PLC input card and reduce installation time, vendors and cost. The Q21-DQ provides A and B channel quadrature output signals that are proportional to the position of the magnet assembly along the length of the probe, and output directly from the transducer to the controller. The quadrature output makes it possible to directly interface to virtually any incremental encoder input or counter card, eliminating costly absolute encoder converters and special PLC interface modules.

An index channel (Z) is also provided and its position may be set by the user at any position along the active system. The A, B and Z channels are differential outputs: the connection for each output consists of two signal wires. These are typically described as the "+" and "-" signals. Differential signals are much less prone to interference caused by electrical noise or ground loops often found in single ended connections.

Quadrature Profile Series (Q21-DQ/Q35-DQ) Specifications:

Output:	Quadrature, A, $\overline{A}$, B, $\overline{B}$, Z, $\overline{Z}$
Span:	5 to 180 in (Q35 maximum span is 36 in)
Repeatability:	+/-0.006% of full span
Resolution:	0.001 in internal (1000 pulses per in)
Operating temperature:	-4 to +158 °F (-20 to +70 °C)
Null zone:	3.00 in
Dead zone:	2.00 in
Operating voltage:	13.5-30 VDC
Current consumption:	3 watts maximum (1 watt typical)
Response time:	≤ 40 in 1 ms ≤ 41 to 100 in 2 ms 101 to 150 in 3 ms 151 to 180 in 4 ms
Inputs:	Option N NPN (used with sourcing outputs) Option P PNP (used with sinking outputs) Option T TTL Option R 5 V differential Option L 10 to 30 VDC, Volt = Vin-1 Volt
Output frequency:	10 kHz - 1 MHz
Nonlinearity:	+/-0.05% of full span
LED:	Green = Power is applied and magnet is present in the programmed range Red = Fault, magnet is in the Null Zone, Dead Zone or lost
Protection rating:	Electronics: IP67, IP68 optional Rod housing: IP65
Agency approval:	CE

Replace Incremental Output Devices:
The Q21-DQ may be used in certain applications to replace incremental rotary and linear encoders. The quadrature output may be used in applications requiring 0.001 inch resolution and repeatability.

Velocity Feedback:
The EZ-track quadrature produces pulses that are sent to the controller in packets at a fixed frequency. The period of the pulses does not change with magnet velocity. Therefore, velocity cannot be determined from the pulse packets unless the controller can interpolate velocity from position over time. If your application requires a velocity feedback, please consider the Linear Encoder on pages B32-B37 or consult factory.

Incremental Output, Absolute Functionality:
The Q21-DQ allows you to use an incremental output, while taking advantage of an absolute sensing technology. The Burst Input on the transducer triggers a data transfer of all incremental position data relative to the transducer's zero position. This can be used to achieve absolute position updates when power is restored to the system or anytime an update is needed to re-zero or home the machine.

Programmable Zero Point:
The zero input allows you to set the probes reference position at any point along the active span. The probe will output an increasing or decreasing signal based on the direction the magnet is moving in relation to the established zero point. See Quadrature Part Number Key to select storage mode.

Volatile Storage:
The zero point will be kept until a new zero pulse is sent or until the probe loses power. The zero point can be programmed an infinite number of times.

Non-Volatile Storage:
The probe will store the zero position even in the event of a power failure. The zero point can be set 100,000 times.

Transducer Inputs:
The burst and zero inputs are single ended connections: the connection for each input consists of only one wire. The Q21-DQ is available with either +24 VDC level signal or TTL level thresholds. Additionally, the 24 VDC may be specified as either sinking or sourcing relative to the probe's input.

Quadrature Output Resolution and Speed:
The internal resolution of the Q21-DQ transducer is 0.001 inches. This would be represented to the encoder input device by specifying an output resolution of 1,000 cycles per inch (CPI).

Frequency or Pulse Rate:
For a typical incremental encoder output, the resolution of the encoder and the speed of travel govern the frequency and pulse width of the output pulses. The output pulse rate from the EZ-track transducer is fixed and controlled internally. This output frequency is user specified (10 kHz to 1 MHz) so that it does not exceed the maximum input rate of the counter card. If the controller's maximum input frequency falls between two available frequencies, choose the lower frequency.

Output Drivers:
The Q21-DQ uses an OL7272 line driver and may be configured for either a TTL level output or a 10-30 VDC level output. Option R has a 5 VDC TTL level output regardless of input power. Option L has an output of 1 volt less than the probe's input voltage and should be used when driving input cards that are not TTL compatible.

We reserve the right to make technical alterations without prior notice.

Quadrature Profile Series

Part Number Key: Quadrature Profile Series

A	B	C		D		E	F	G	H	I	J		K
LT	40	E	-	Q21	-	DQ	R	A	N	N	X2	-	H11121

A	Type
LT	Linear Transducer

B	Measuring Span
*	Length of Measuring Span

C	Units of Measurement
E	Inches

D	Housing Height
Q21	21 mm
Q35	35 mm

E	Resolution
DQ	Quadrature

F	Output Configuration
L	10-30 VDC, Line Driver
R	13.5 - 30 VDC, RS422 Line Driver (TTL Compatible)

G	Quadrature Cycle Frequency		
A	10 kHz	F	150 kHz
B	25 kHz	G	250 kHz
C	50 kHz	H	500 kHz
D	75 kHz	I	1000 kHz
E	100 kHz		

H	Zero Offset Storage
N	Nonvolatile (100,000 storage cycles max)
V	Volatile

I	Input Type
N	Sinking (Typically used with Sourcing Outputs)
P	Sourcing (Typically used with Sinking Outputs)
T	TTL Level

J	Number of LED's
X2	2 Diagnostic LEDs

K	Type of Connection
H11121	12-pin M12 Eurofast Connector

Note: In addition to the LDT, a typical system includes a magnet, mounting feet and cable (all sold separately).

Dimensions: Q21-DQ Quadrature Profile Series

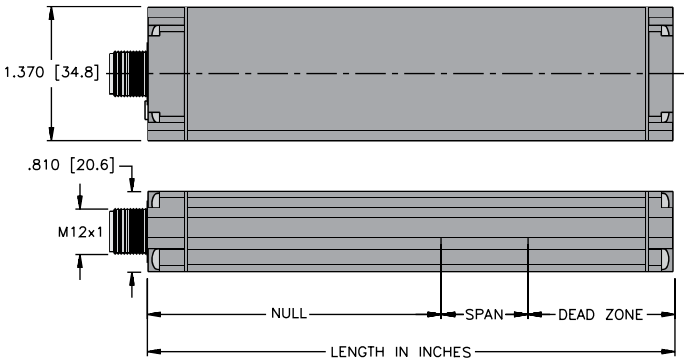

Wiring Diagram: Q21-DQ/ Q35-DQ

12-pin Eurofast Connection

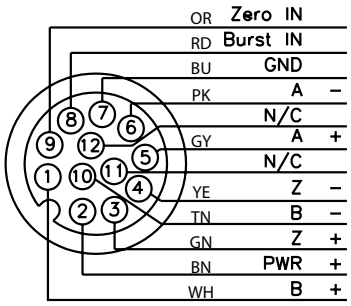

Mating Cordset: **RKC 12T-*/S618**

* Length in meters.

Dimensions: Q35-DQ Quadrature Profile Series

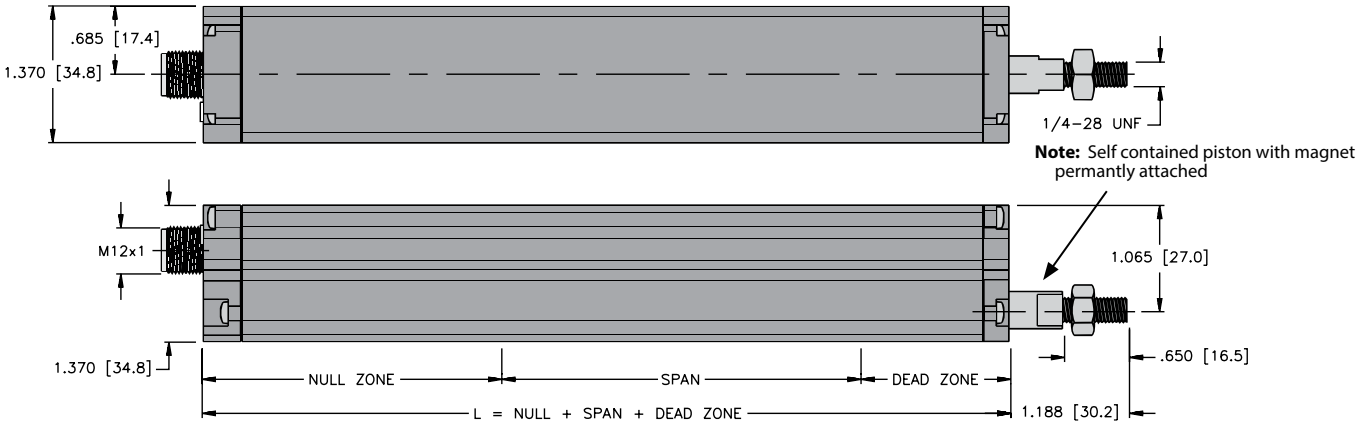

We reserve the right to make technical alterations without prior notice.

Digital Profile Series



The Q21D is a non-contact LDT with a digital output. This transducer utilizes magnetostrictive technology to give absolute position that is repeatable to .006% of the active sensing distance. It also has the same auto-tuning capability that the other profile series transducers offer, so that it can adjust its signal strength to various magnets.

There is a diagnostic LED that is located at the connector end of the probe and provides visual status information regarding the operation of the Q21D. The indications are specified in the table below. The Q21D digital transducer provides either a Start/Stop or a Variable Pulse signal interface that is proportional to the position of the slide magnet assembly along the length of the probe.

Digital Profile Series (Q21D/Q35D) Specifications:

Output:	Start/Stop Pulse: External interrogation; Variable Pulse: Internal or External interrogation
Number of recirculation:	Variable Pulse: 001 (standard) to 127
Span:	5 to 180 in (Q35 maximum span is 36 in)
Repeatability:	+/-0.006% of full span
Hysteresis:	+/-0.02% of full span
Operating temperature:	-4 to +158 °F (-20 to +70 °C)
Null Zone:	3.00 in
Dead Zone:	2.00 in
Operating voltage:	13.5-30 VDC
Current consumption:	120 mA at 15 VDC, 2.5 watts maximum
Shock:	Tested to 40 g
Vibration:	MIL-STD810E, 10G rms random, 20 Hz - 2 kHz
LED:	Green = power is applied and magnet is present Red = fault, magnet is in the null zone, dead zone or lost Yellow = no interrogation signal detected
Protection rating:	Electronics: IP67, IP68 optional Rod housing: IP65
Agency approval:	CE

Start/Stop (RS):
The Start/Stop signal interface of the Q21D digital output series is a differential RS-422 output. To initiate a start pulse, an external device must be used, and should be a minimum of 1 ms in duration. A stop pulse of 1 ms in duration will follow. The time delay from the leading edge of the start pulse to the leading edge of the stop pulse is proportional to the distance from the Null Zone to the Magnet.

Variable Pulse (VP):
The Variable Pulse signal interface digital output is a pulse width modulated signal (RS-422). The Q21D LDT can be ordered with either an external (VPE) or internal (VPI) interrogation.

External interrogation occurs when an external device connected to the Q21D-VPE generates a start pulse. This start pulse should be a minimum of 1 ms in duration. Within 50 nanoseconds after the leading edge of the start pulse has been received, the LDT will generate an output pulse. The duration of the output pulse is proportional to the distance from the Null Zone to the Magnet.

The Q21D-VPI generates an internal interrogation, and will continually output pulse width modulated signals. The duration of this output pulse is also proportional to the distance from the Null Zone to the Magnet.

We reserve the right to make technical alterations without prior notice.

Digital Profile Series

Part Number Key: Digital Profile Series

A	B	C		D		E		F		G		H		I
LT	40	E	-	Q21D	-	VPI	-	001	-	X3	-	H1161	/	S1661

A	Type
LT	Linear Transducer

B	Measuring Span
*	Length of Measuring Span

C	Units of Measurement
E	Inches

D	Housing Height
Q21D	21 mm
Q35D	35 mm

E	Output Mode
CP	RS422, Control Pulse
RS	RS422, Start/Stop Pulse
VPE	Variable Pulse External Interrogations
VPI	Variable Pulse Internal Interrogations

F	Number of Recirculations [1)]
*	001 (Standard) to 127

[1)] Only Available with Output Mode 'VPI' or 'VPE'. Otherwise (Blank)

G	Number of LEDs
X3	3 Diagnostic LED's

H	Type of Connection
H1161	6-pin M12 Eurofast Connector

I	Specials
(Blank)	IP67
S1661	IP68

Note: In addition to the LDT, a typical system includes a magnet, mounting feet and cable (all sold separately).

Dimensions: Q21D Digital Profile Series

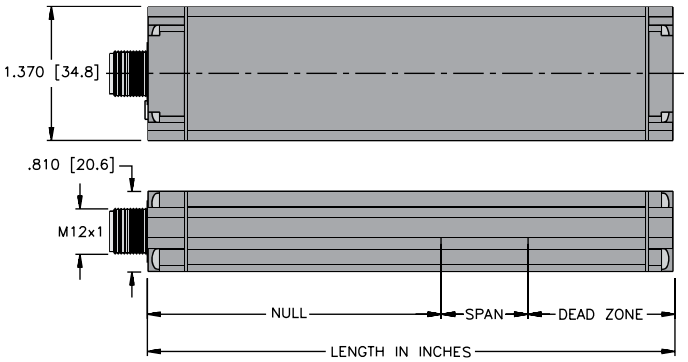

Wiring Diagram: Q21D/Q35D

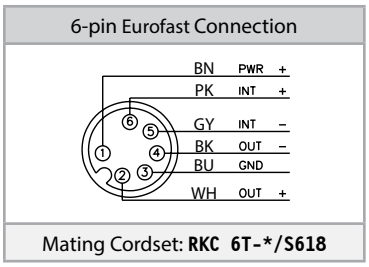

Dimensions: Q35D Digital Profile Series

Note: Self contained piston with magnet permantly attached

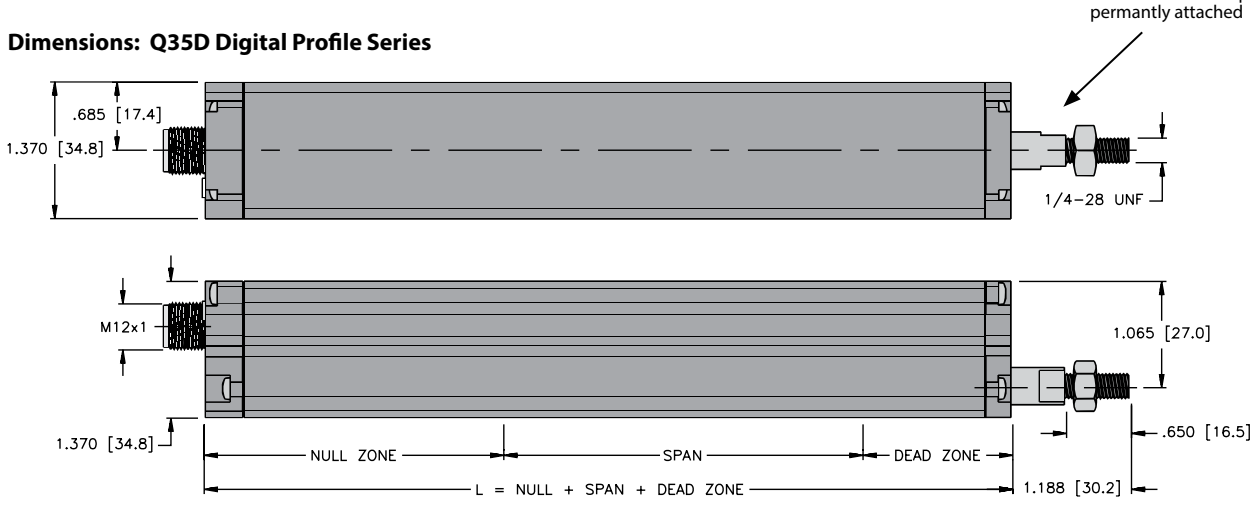

We reserve the right to make technical alterations without prior notice.

Profile Series Accessories

Slide Magnet

SM-Q21

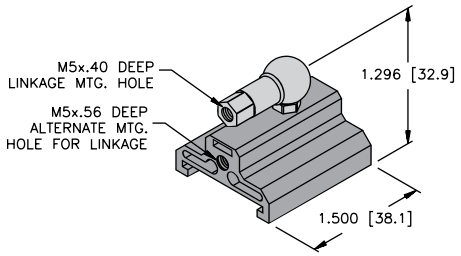

Slide Magnet with Side Adapter

SA-Q21

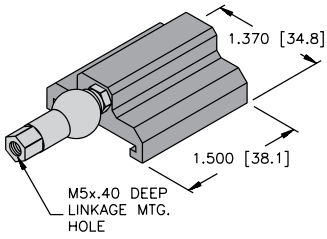

Floating Magnet

FM-Q21

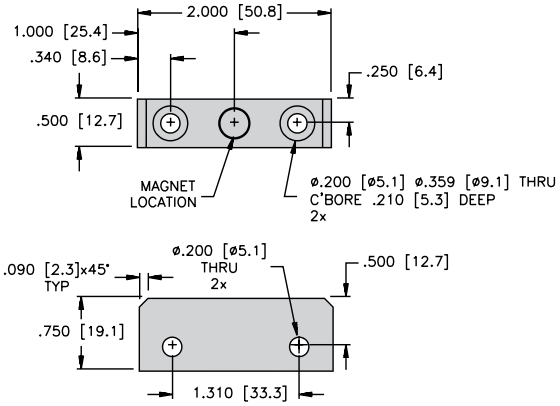

Control Arms

CA*E-Q21

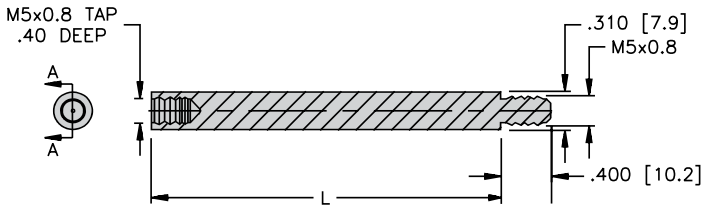

Q21 Upside Down Brackets

UB-Q21 (2/bag)

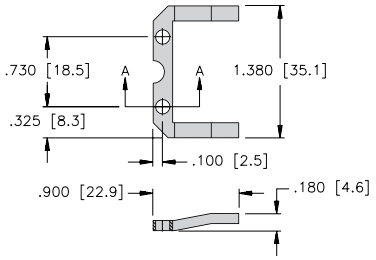

Q21 Mounting Brackets

MB-Q21

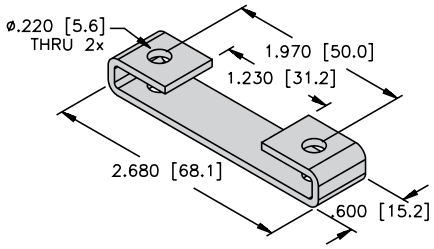

Rod Ends

RE-Q21

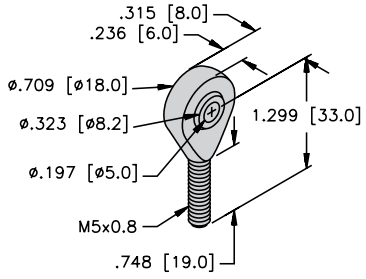

RBVA-M5

Angle Joint for M5 Thread, Stainless Steel



ABVA-M5

Angle Joint for M5 Thread, Stainless Steel



* Lengh in inches.

We reserve the right to make technical alterations without prior notice.

Profile Series Accessories

Rocker Programmer

RP-Q21

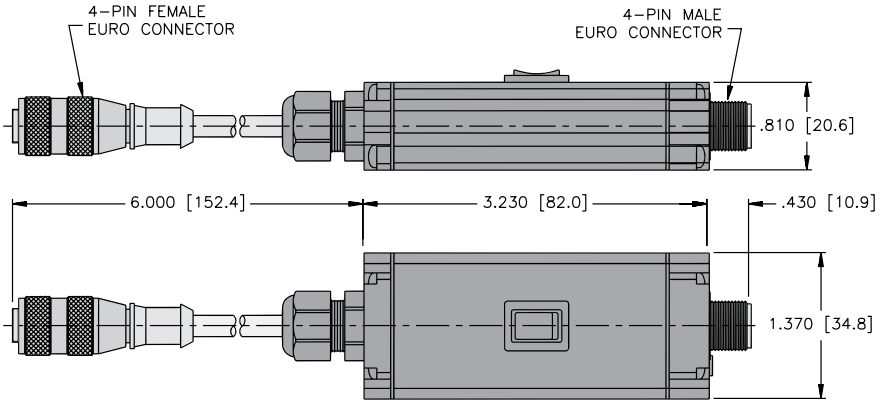

Test and Programming Device

TB2-LDT (voltage)
TB2-LDT-LI (current)

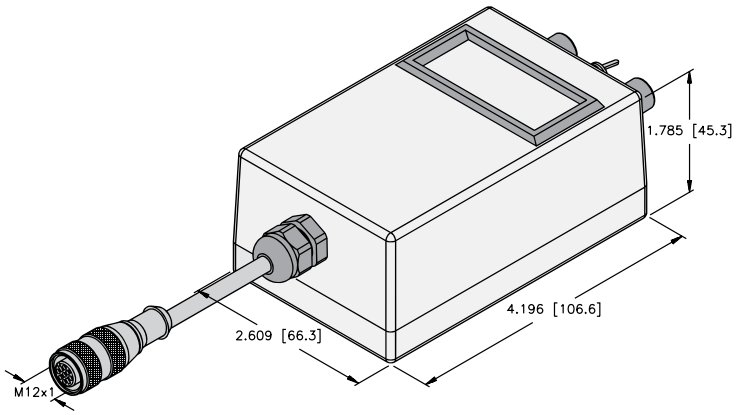

Lock-Euro-G

Required for use with a Q21 to maintain FM approval in a Class I, Div 2 environment



Wiring Diagram

5-pin M12 Eurofast Connection
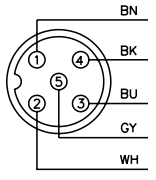
Mating Cordset: **P-RKG 5.64T-1877-*** Recommended mating cordset for use in FM Class I, Div 2 environment

We reserve the right to make technical alterations without prior notice.

Rod Style Series



Rugged Rod Style Housings:
Transducers designed to survive in harsh industrial environments to reduce downtime on the plant floor.

The R10 housing, sensing rod and components are designed and constructed to withstand heavy duty applications, such as those found in lumber mills, steel mills and stamping plants. They have been lab tested and field proven to withstand 2000 g of shock and 30 g of random vibration without false signals or mechanical damage.

In addition, the **R10's** electronics are enclosed in an aluminum housing with O-ring seals for an IP67 environmental rating.

Although R10 sensors can be ordered with any of the outputs below, the units can easily be changed in the field to reverse the output signal. Thus, one model can be used for two applications by programming the "zero" and "span" appropriately. The differential feature allows the gap distance between two magnets to be measured. The magnets must remain within the active span at all times and cannot be any closer than 2.5 inches to each other.

Rod Style Series (R10) Specifications:

	LT Analog	LTX Analog	LTX Digital	LTX SSI
Output:	4-20 mA, 20-4 mA, 0-10 VDC, 10-0 VDC	0-10 VDC, 10-0 VDC, -10 to 10 VDC, 10 to -10 VDC, 0-5 VDC, 5-0 VDC, -5 to 5 VDC, 5 to -5 VDC, 4-20 mA, 20-4 mA	RS422 Start/Stop, Variable Pulse: Internal or External interogation	24, 25 or 26 bit, Binary or Gray Code
Span[1]:	2-168 in	1-300 in	1-300 in	1-300 in
Repeatability:	+/-0.006% of full span or +/-0.002 in, whichever is greater	Equal to resolution	Equal to resolution of controller	Equal to output resolution
Resolution:	0.001 in / 16 bit	0.00006 in / 16 bit	Controller depedent	English: 0.00005 in, 0.0001 in, 0.0005 in, 0.001 in Metric: 1, 5, 10, 20 micron
Operating temperature:	Head (Electronics): -40 to +158 °F (-40 to +70 °C) Guide Tube: -40 to +221 °F (-40 to +105 °C)	Head (Electronics): -40 to +185 °F (-40 to +85 °C) Guide Tube: -40 to +221 °F (-40 to +105 °C)	Head (Electronics): -40 to +185 °F (-40 to +85 °C) Guide Tube: -40 to +221 °F (-40 to +105 °C)	Head (Electronics): -40 to +185 °F (-40 to +85 °C) Guide Tube: -40 to +221 °F (-40 to +105 °C)
Storage temp.	-40 to +185 °F (-40 to +85 °C)	-40 to +221 °F (-40 to +105 °C)	-40 to +221 °F (-40 to +105 °C)	-40 to +221 °F (-40 to +105 °C)
Null zone:	2.00 in	2.00 in	2.00 in	2.00 in
Dead zone:	2.50 in	2.50 in	2.50 in	2.50 in
Operating pressure:	5,000 PSI operating, 10,000 PSI spike	5,000 PSI operating, 10,000 PSI spike	5,000 PSI operating, 10,000 PSI spike	5,000 PSI operating, 10,000 PSI spike
Operating voltage:	13.5-30 VDC	7-30 VDC	7-30 VDC	7-30 VDC
Current consumption:	3 watts maximum, 200 mA at 15 VDC	1 watt at 1 ms interrogation time with no recirculations. Power consumption increases as interrogation times and recirculations increase. 40 mA at 24 VDC typical	1 watt at 1 ms interrogation time with no recirculations. Power consumption increases as interrogation times and recirculations increase. 40 mA at 24 VDC typical	1.3 watt at 1 ms interrogation time. Power consumption increases as interrogation times increase. 40 mA at 24 VDC typical
Response time:	1 ms (span length 1-50 in) 2 ms (span length 51-100 in) 3 ms (span length 101-150 in) 4 ms (span length 151-168 in)	0.5 mms (L ≤ 2") 1 ms (2" < L ≤ 12") 2 ms (12" < L ≤ 30") 3 ms (30" < L ≤ 50") 4 ms (50" < L ≤ 100") 5 ms (100" < L ≤ 150") 6 ms (150" < L ≤ 180") 7 ms (180" < L ≤ 250") 8 ms (250" < L ≤ 300")	Controller Dependent	4.0 K measurements/sec. (span length 1-12 in) 2.4 K measurements/sec. (span length 13-30 in) 2.0 K measurements/sec. (span length 31-40 in) 1.1 K measurements/sec. (span length 41-80 in) 0.5 K measurements/sec. (span length 81-197 in)
Shock:	2000 g	1000 g	1000 g	1000 g
Vibration:	30 g	30 g	30 g	30 g
Hysteresis:	+/-0.02% of full span	0.001 in	0.001 in	0.001 in
Non-linearity:	+/-0.05% of full span	< 0.01% or +/-0.005 in, whichever is greater	< 0.01% or +/-0.005 in, whichever is greater	< 0.01% or +/-0.005 in, whichever is greater
Rod end / Mounting hex:	316 stainless steel, 0.405 in (10.29 mm) outer dia.	316 stainless steel, 0.405 in (10.29 mm) outer dia.	316 stainless steel, 0.405 in (10.29 mm) outer dia.	316 stainless steel, 0.405 in (10.29 mm) outer dia.
LED:	N/A	Tri-color diagnostic	Tri-color diagnostic	Tri-color diagnostic
Protection rating:	IP67	IP68	IP68	IP68
Agency approval:	CE	CE	CE	CE

[1] Span available in 0.1" increments

We reserve the right to make technical alterations without prior notice.

Rod Style Series

Wiring Diagrams:

LT and LTX Analog

5-pin M12 Eurofast Connection

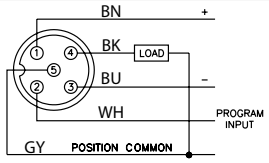

Mating Cordset: **RK 4.5T-*/S618**

LTX Digital

6-pin M12 Eurofast Connection

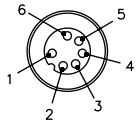

Pinouts (Color)
1. PWR+ (BN)
2. OUT+ (WH)
3. COMMON (BU)
4. OUT- (BK)
5. INT-(GY)
6. INT+ (PK)

Mating Cordset: **RKC 6T-*/S618**

LTX SSI

6-pin M12 Eurofast Connection

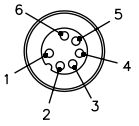

Pinouts (Color)
1. PWR+ (BN)
2. DATA+ (WH)
3. COMMON (BU)
4. DATA- (BK)
5. CLOCK- (GY)
6. CLOCK+ (PK)

Mating Cordset: **RKC 6T-*/S618**

Part Number Key: Analog R10 Rod Style Series

A	B	C		D		E	F		G
LT	12	E	-	R10	-	LI	0	-	H1151

A	Type
LT	Linear Transducer

B	Measuring Span
*	Length of Measuring Span

C	Units of Measurement
E	Inches

D	Housing Size, Material
R10	10 mm Rod, Aluminum
ER10	10 mm Rod, Stainless Steel

E	Output Configuration
LI	Current
LU	Voltage
LD	Differential

F	Output Type		
	Current	Voltage	Differential
0	4-20 mA	0 to 10 V	0 to 10 V
1	20-4 mA	10 to 0 V	4-20 mA
4		0 to 5 V	
5		5 to 0 V	

G	Type of Connection
H1151	5-pin M12 Eurofast Connector

Part Number Key: LTX Analog R10 Rod Style Series

A	B	C		D		E	F	G		H
LTX	12	E	-	R10	-	LI	0	X3	-	H1151

A	Type
LTX	Linear Transducer

B	Measuring Span
*	Length of Measuring Span

C	Units of Measurement
E	Inches [1]
M	Millimeters [1]

[1] This selection also determines thread type(see LTX drawing on page B26)

D	Housing Size, Material
R10	10 mm Rod, Aluminum
ER10	10 mm Rod, Stainless Steel

E	Output Configuration
LI	Current
LU	Voltage

F	Output Type	
	Current	Voltage
0	4-20 mA	0 to 10 V
1	20-4 mA	10 to 0 V
2		-10 to 10 V
3		10 to -10 V
4		0 to 5 V
5		5 to 0 V
6		-5 to 5 V
7		5 to -5 V

G	Number of LEDs
X3	3 Diagnostic LEDs

H	Type of Connection
H1151	5-pin M12 Eurofast Connector

We reserve the right to make technical alterations without prior notice.

Turck Inc. | 3000 Campus Drive, Minneapolis, MN 55441 | T +1 800 544 7769 | F +1 763 553 0708 | www.turck.com

Rod Style Series

Part Number Key: Digital R10 Rod Style Series

A	B	C		D		E		F		G		H
LTX	12	E	-	R10	-	VPI	-	001	-	X3	-	H1161

A	Type
LTX	Linear Transducer

B	Measuring Span
*	Length of Measuring Span

C	Units of Measurement
E	Inches [1]
M	Millimeters [1]

[1] This selection also determines thread type(see LTX drawing on page B26)

D	Housing Size, Material
R10	10 mm Rod, Aluminum
ER10	10 mm Rod, Stainless Steel

E	Output Mode
RS	RS422, Start/Stop Pulse
VPE	Variable Pulse External Interrogations
VPI	Variable Pulse Internal Interrogations

F	Number of Recirculations [2]
*	001 (Standard) to 225

[2] Only Available with Output Mode 'VPI' or 'VPE'. Otherwise (Blank)

G	Number of LEDs
X3	3 Diagnostic LEDs

H	Type of Connection
H1161	6-pin M12 Eurofast Connector

Part Number Key: SSI R10 Rod Style Series

A	B	C		D		E		F		G	H	I	J		K		L		M
LTX	12	E	-	R10	-	SSI	-	1	-	B	S	F	B	-	X3	-	A	-	H1161

A	Type
LTX	Linear Transducer

B	Measuring Span
*	Length of Measuring Span

C	Units of Measurement
E	Inches [1]
M	Millimeters [1]

[1] This selection also determines thread type(see LTX drawing on page B26)

D	Housing Size, Material
R10	10 mm Rod, Aluminum
ER10	10 mm Rod, Stainless Steel

E	Data Mode
SSI	Synchronous Serial Interface

F	Data Length
1	24 bit
2	25 bit
3	26 bit

G	Data Format
B	Binary Code
G	Gray Code

H	Data Type
A	Asynchronous
S	Synchronous

I	Direction
F	Forward
R	Reverse
V	Velocity

J	Resolution
1	0.005 mm
2	0.01 mm
3	0.05 mm
4	0.1 mm
5	0.02 mm
6	0.002 mm
7	0.001 mm
8	0.00005"
9	0.0001"
A	0.0005"
B	0.001"

K	Number of LEDs
X3	3 Diagnostic LEDs

L	Option
(Blank)	None
A	Alarm

M	Type of Connection
H1161	6-pin M12 Eurofast Connector

We reserve the right to make technical alterations without prior notice.

Rod Style Series

Dimensions: Rod Style Series LT

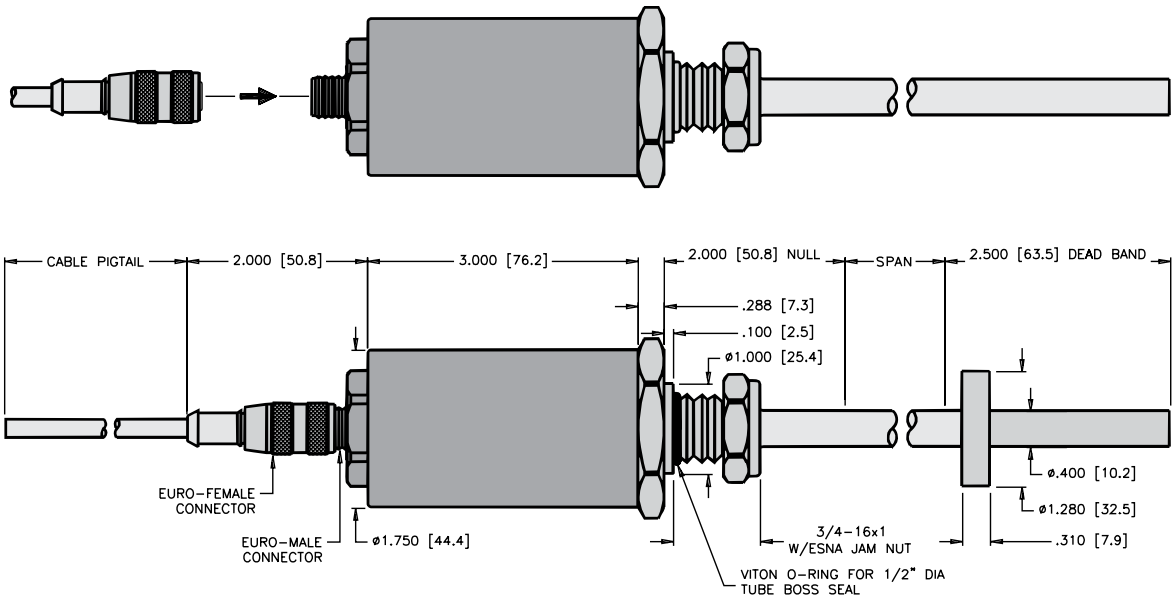

Dimensions: Rod Style Series LTX

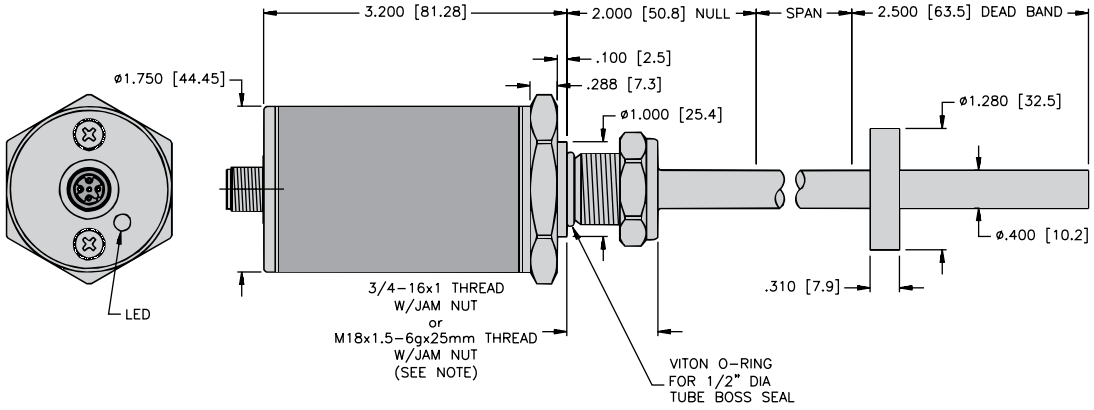

NOTE: UNLESS OTHERWISE SPECIFIED

FOR ENGLISH THREAD TYPE, RAISED FACE FEATURE COMPLIES WITH SAE J1926–1.

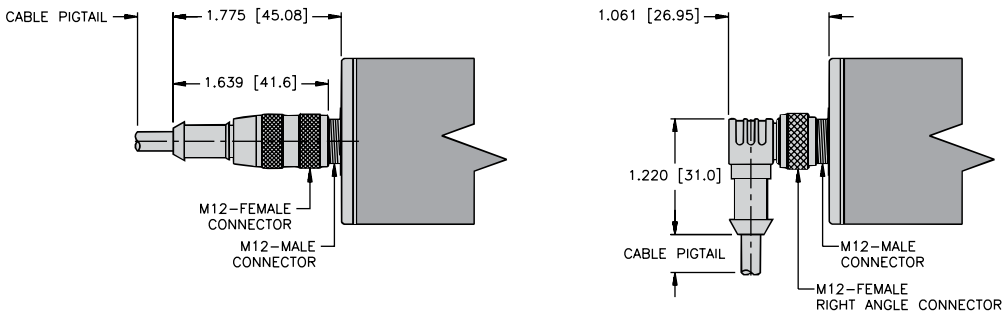

We reserve the right to make technical alterations without prior notice.

Rod Style Series Accessories

1" Diameter Cylinder Magnet

CM-R10

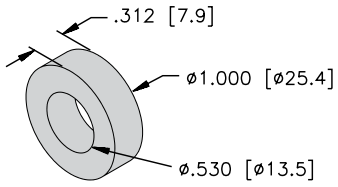

Standard Magnet Spacer

STS-R10

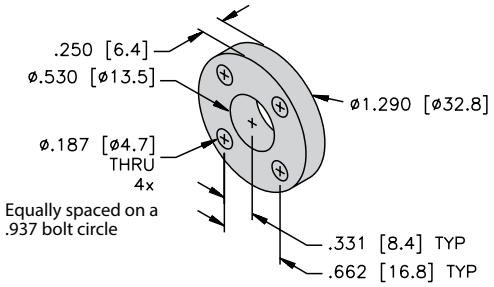

Split Magnet Spacer

SPS-R10

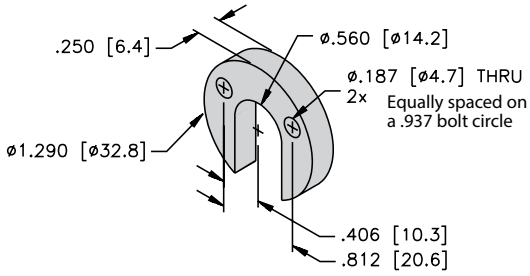

Egg Shape Float

EF-R10

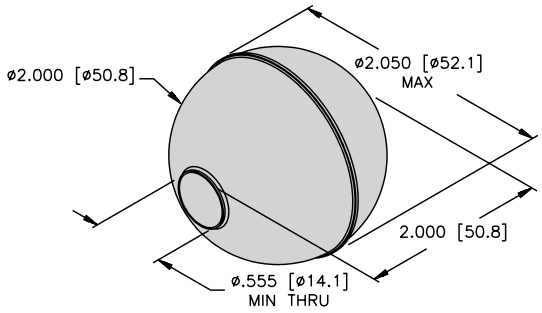

Standard 4-Hole Magnet

STM-AL-R10 (aluminum)
STM-SS-R10 (stainless steel)

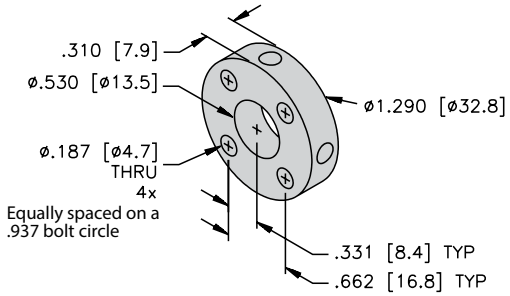

Split Magnet

SPM-AL-R10

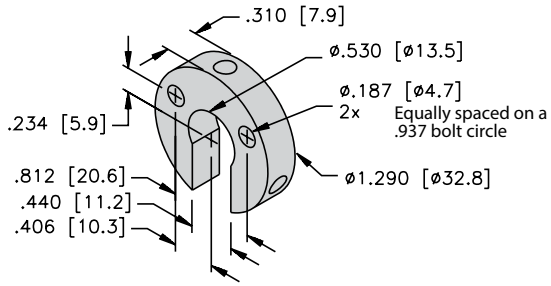

All dimensions shown as: inches [mm]

We reserve the right to make technical alterations without prior notice.

Rod Style Series Accessories

Mounting Bracket

LB-R10

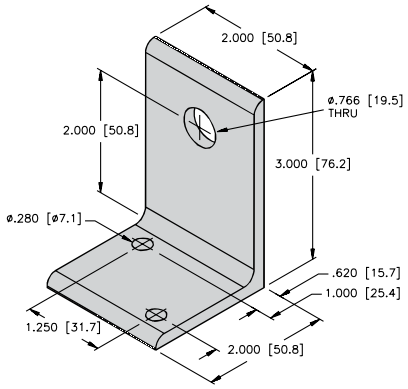

Rod Support

RB-R10

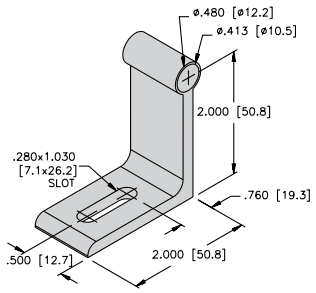

Magnet Mounting Bracket

MMB-R10

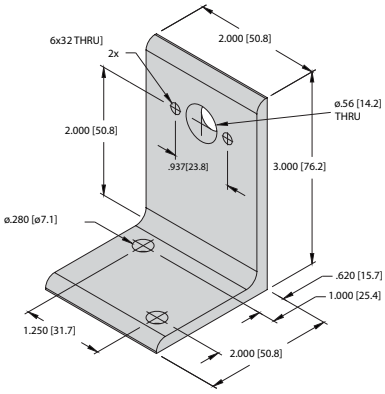

MB-R10: Part number includes mounting bracket **LB-R10** and rod support bracket **RB-R10.**

Test and Programming Device

TB2-LDT
TB2-LDT-LI

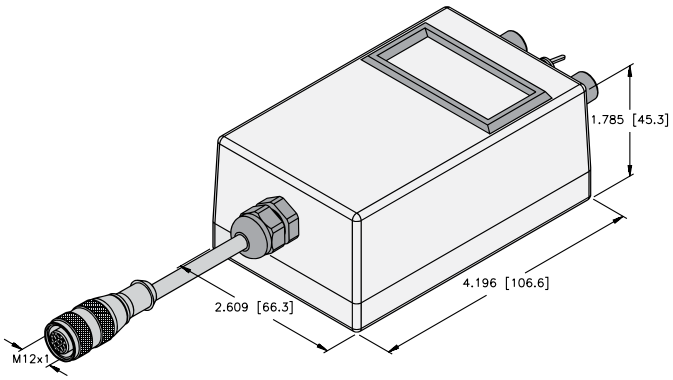

Rubber Boot

BT-R10

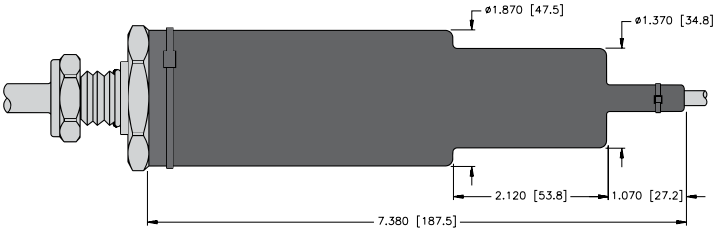

All dimensions shown as: inches [mm]

We reserve the right to make technical alterations without prior notice.

Glossary of Terms: Linear Position Sensors

Absolute Sensing: Position is accurately known at power ON without the need for a reference or home position.

Magnetostrictive Technology: A linear sensor technology based on a magnetic principal of operation used in all EZ-track LDTs.

Repeatability: The difference in the indicated position of a single point when that point is repeatedly approached from the same direction under the same ambient conditions.

Accuracy: The difference between the target point and the point actually indicated by the sensor with relation to a fixed reference.

Non-Linearity: The distance the indicated position of the positioning element along the span varies from the actual physical position.

Resolution: The smallest incremental change in position that can be detected and indicated as an output.

Blind Zone: Term used to describe the areas of the Q-track sensors where it no longer picks up the positioning element.

Non-Volatile: Position is held in memory and will not be lost on power down.

Span: The area of a linear sensor that reacts to the positioning element as it moves over it, producing an output signal.

Dead Zone: An area at the end of the EZ-track sensor that is opposite the connector where the magnet cannot be accurately sensed.

Null Zone: An area at the connector end of the sensor where the magnet cannot be accurately sensed.

Span Point: The end point of the analog measuring distance at which the output signal equals the greatest value of the analog scale.

Hysteresis: The difference of the measured value when approaching a defined point from opposite directions.

Quadrature Cycle Output Frequency: The fixed frequency at which the pulse rate is transmitted out of the probe.

SSI: Synchronous Serial Interface is a standard protocol for serial interface between sensors and controllers.

Incremental Sensing: A relative position feedback device whose signal is always referenced to the zero position. The sensor produces a digital square wave pulse train that is fed into an up/down counter chip or clock to derive position.

RLC: Stands for Resistance, Inductance and Capacitance. It is the principal of operation for all Turck Q-track sensors. The positioning element is a passive coil circuit that is excited by an emitter coil and the resulting inducted voltage is picked up by receiver coils.

Volatile: Position held in memory that is lost on power down.

Zero Point: The beginning point of the analog measuring distance at which the output signal equals the lowest value of the analog scale. The Zero Point is also used as the reference position for the incremental scale used in quadrature output probes.

We reserve the right to make technical alterations without prior notice.

Linear Magnetic Measurement System LM-2/LMT-2

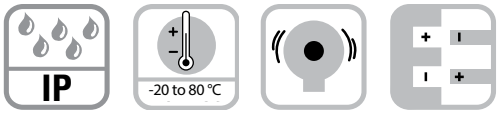

High IP | Temperature | Shock/vibration resistant | Reverse polarity protection

Robust

- **Fully potted diecast metal housing.**
- **Increased ability to withstand vibrations and rough installation**: Eliminates machine downtime and repairs. Non-contact technology results in high shock and vibration resistance.
- **Stays sealed even when subjected to harsh everyday use.** Die cast metal housing with up to IP68/IP69K protection.



Compact

- **Installation depth only 10 mm, width of magnetic band 10 mm.**
- **Installation height only 28 mm.** May be used even where space is very tight.

Versatile

- **Fast start-up of the measuring system:** Easy attachment of the magnetic band and the sensor head.
- **Easy mounting with large tolerances possible:** Distance of sensor head to magnetic band from 0.1 to 1.0 mm; tolerates lateral misalignment + 1 mm; LED warning indicator when magnetic field is too weak.

Technical Data Magnetic Sensor LM-2:

Output circuit [Key Code]:	Push-Pull [2R]	RS422 [4K]
Supply voltage:	4.8 to 30 VDC	4.8 to 26 VDC
Load/channel, max cable length:	±20 mA, max. 30 m	120 Ohm, RS422 standard
Current consumption (without load):	typ. 25 mA, max. 60 mA	
Short circuit protected:	yes	yes [1]
Min. pulse interval:	1 µs (edge interval) corresponds to 4 µs/cycle (see signal figures below)	
Output signal:	A, $\overline{A}$, B, $\overline{B}$, I, $\overline{I}$	
Reference signal:	Index periodical	
System accuracy:	typ. 200 µm, max. ± (0.04 + 0.04 x L) mm, (L in [m], up to L = 50 m, at T = 20 °C)	
Repeat accuracy:	±1 increment	
Resolution and speed [2]:	100 µm (post-quadrature), max. 25 m/s 25 µm (post-quadrature), max. 4 m/s 10 µm (post-quadrature), max. 6.5 m/s	
Permissible alignment tolerance:	see draft "Mounting tolerances"	
Gap sensor / magnetic band:	0.1-1.0 mm (0.4 mm recommended)	
Offset:	max. ±1 mm	
Tilting:	max. 3°	
Torsion:	max. 3°	
Working temperature:	-4 to +176 °F (-20 to +80 °C)	
Shock resistance:	500 g / 1 ms	
Vibration strength:	30 g / 10-2,000 Hz	
Protection class:	IP67 according to DIN 60529 (housing)	
Humidity:	100%, condensation possible	
	IP68/69K	
Housing:	Zinc die-cast	
Cable:	2 m, PUR 8 x 0.14 mm², shielded, may be used in trailing cable installations	
Status-LED:	Green: Pulse-index; Red: Error Speed too high or magnetic fields too weak (for sensors **LM-2*10-**020-*21** and **LM-2-*10-**050-***)	

RoHS compliant acc. to EU guideline 2011/65/EU

Function Principle:

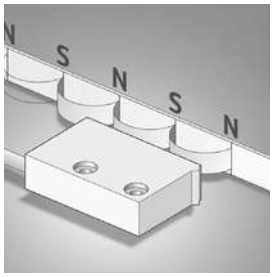

Signal Figures

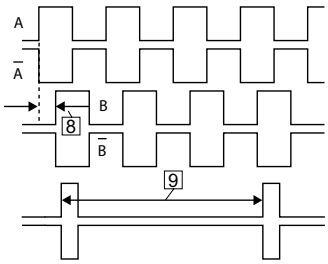

9 Periodic index signal (every 2 mm)
8 The logical assignment A, B and I-Signal can change
Min. pulse interval: pay attention to the instructions in the technical data

[1] A max. of one channel only may be short-circuited: (when +V = 5 V, a short circuit to another channel, 0 V, or +V is permissible.) (when +V = 5-30 V, a short circuit to another channel or to 0 V is permissible.)
[2] At the listed rotational speed the min. pulse interval is 1µs, this corresponds to 250 kHz. For the max. rotational speed range a counter with a count input frequency of not less then 250 kHz should be provided.

We reserve the right to make technical alterations without prior notice.

Linear Magnetic Measurement System LM-2/LMT-2



Technical Data Magnetic Band LMT-2:

Pole gap:	2 mm from pole to pole
Dimensions:	Width: 10 mm, Thickness: 1.7 mm incl. masking tape
Temperature coefficient:	$(11\pm1)x10^{-6}/K$
Temperature ranges:	working temperature: -4 to +176 °F (-20 to +80 °C) storage temperature: -40 to +176 °F (-40 to +80 °C)
Mounting:	adhesive joint
Measuring:	0.1 m (to receive an optimal result of measurement, the magnetic band should be ca. 0.1 m longer than the desired measuring length)
Bending radius:	≥ 50 mm

Standard Wiring:

Pin	Signal	Color
1	0 V	WH
2	+V	BN
3	A	GN
4	$\overline{A}$	YE
5	B	GY
6	$\overline{B}$	PK
7	Z	BU
8	$\overline{Z}$	RD

Shield is on the housing

Wiring Diagram:

Male Encoder View

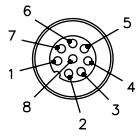

Mating Cordset:
E-RKC 8T-930-*

* Length in meters.

Part Number Key: Magnetic Sensor LM-2

A		B		C	D		E
LM-2	-	P10	-	2R	005	-	C

A	Type
LM-2	Linear Magnetic

B	Housing
P10	10 mm, IP68/IP69K
Q10	10 mm, IP67

C	Voltage Supply and Output Type
2R	4.8-30 VDC, Push-Pull
4K	4.8-26 VDC, RS422

D	Resolution*
005	100 µm
020	25 µm
050	10 µm

* With quadruple evaluation

E	Type
C	Cable (2 m PUR)
C*-E-RSS8T	Cable w/ *m M12 Eurofast Connector

* Not available > 2 m

Part Number Key: Magnetic Band LMT-2

A		B
LMT-2	-	0010

A	Type
LMT-2	10 mm, Linear Magnetic Tape, 2 mm Pole Gap

B	Length*
0010	1 m
0050	5 m
0100	10 m

*Other lengths < 50 m available on request

We reserve the right to make technical alterations without prior notice.

Linear Magnetic Measurement System LM-2/LMT-2

Dimensions: Magnetic Sensor LM-2-*10

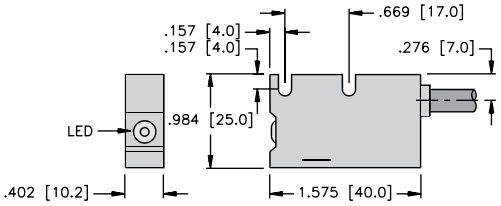

Dimensions: Magnetic Band LMT-2

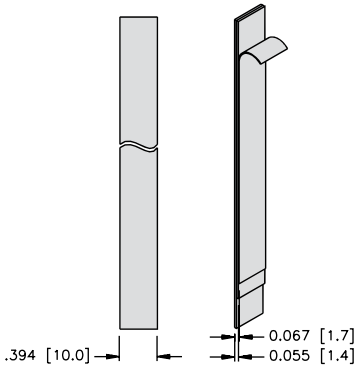

Permissible Mounting Tolerances:

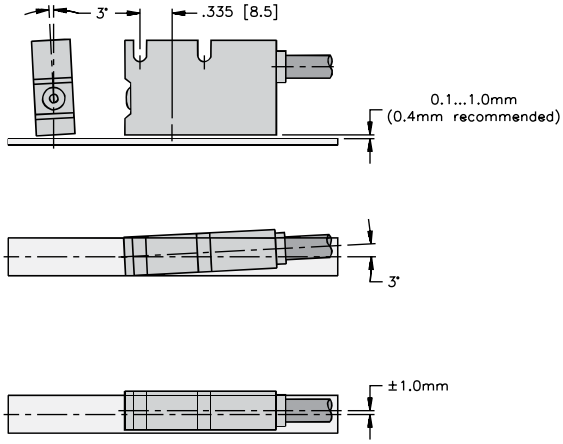

We reserve the right to make technical alterations without prior notice.

Turck Inc. | 3000 Campus Drive, Minneapolis, MN 55441 | T +1 800 544 7769 | F +1 763 553 0708 | www.turck.com

TURCK

Linear Magnetic Measurement System LM-5/LMT-5

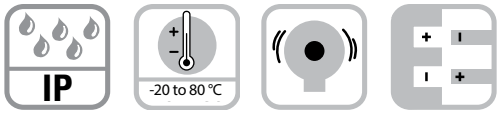

High IP | Temperature | Shock/vibration resistant | Reverse polarity protection

Robust

- **Fully potted diecast metal housing.**
- **Increased ability to withstand vibrations and rough installation**: Eliminates machine downtime and repairs. Non-contact technology results in high shock and vibration resistance.
- **Stays sealed even when subjected to harsh everyday use.** Die cast metal housing with up to IP68/IP69K protection.



Compact

- **Installation depth only 10 mm, width of magnetic band 10 mm.**
- **Installation height only 28 mm.** May be used even where space is very tight.

Simple Installation

- **Fast start-up of the measuring system:** Easy attachment of the magnetic band and the sensor head.
- **Easy mounting with large tolerances possible**: Distance of sensor head to magnetic band from 0.1 to 2.0 mm; tolerates lateral misalignment +1 mm; LED warning indicator when magnetic field is too weak.

Technical Data Magnetic Sensor LM-5:

Output circuit [Key Code]:	Push-Pull [2R]	RS422 [4K]
Supply voltage:	4.8 to 30 VDC	4.8 to 26 VDC
Load/channel, max cable length:	±20 mA, max. 30 m	120 Ohm, RS422 standard
Current consumption (without load):	typ. 25 mA, max. 60 mA	
Short circuit protected:	yes	yes [1]
Min. pulse interval:	1 µs (edge interval) corresponds to 4 µs/cycle (see signal figures below)	
Output signal:	A, $\overline{A}$, B, $\overline{B}$, I, $\overline{I}$	
Reference signal:	Index periodical	
System accuracy:	typ. 200 µm, max. ± (0.06 + 0.04 x L) mm, (L in [m], up to L = 50 m, at T = 20 °C)	
Repeat accuracy:	±1 increment	
Resolution and speed[2]:	25 µm (post-quadrature), max. 16.25 m/s 5 µm (post-quadrature), max. 3.25 m/s	
Permissible alignment tolerance:	see draft "Mounting tolerances"	
Gap sensor / magnetic band:	0.1-2.0 mm (1.0 mm recommended)	
Offset:	max. ±1 mm	
Tilting:	max. 3°	
Torsion:	max. 3°	
Working temperature:	-4 to +176 °F (-20 to +80 °C)	
Shock resistance:	500 g/1 ms	
Vibration strength:	30 g/10-2000 Hz	
Protection class:	IP67 according to DIN 60529 (housing)	
	IP68/IP69K	
Humidity:	100%, condensation possible	
Housing:	Zinc die-cast	
Cable:	2 m, PUR 8 x 0.14 mm², shielded, may be used in trailing cable installations	
Status-LED:	Green: Pulse-index; Red: Error Speed too high or magnetic fields too weak (for sensors **LM-5-*10-**050-*** and **LM-5-*10-**250-***)	

RoHS compliant acc. to EU guideline 2011/65/EU

Function Principle:

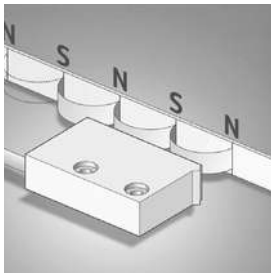

Signal Figures:

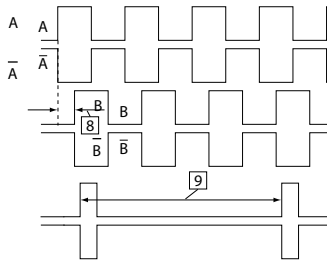

9 Periodic index signal (every 5 mm)
8 The logical assignment A, B and I-Signal can change
Min. pulse interval: pay attention to the instructions in the technical data

[1] A max. of one channel only may be short-circuited: (when +V = 5 V, a short circuit to another channel, 0 V, or +V is permissible.) (when +V = 5-30 V, a short circuit to another channel or to 0 V is permissible.)
[2] At the listed rotational speed the min. pulse interval is 1µs, this corresponds to 250 kHz. For the max. rotational speed range, a counter with a count input frequency of not less then 250 kHz should be provided.

We reserve the right to make technical alterations without prior notice.

Linear Magnetic Measurement System LM-5/LMT-5

Technical Data Magnetic Band LMT-5:

Pole gap:	5 mm from pole to pole
Dimensions:	Width: 10 mm, Thickness: 1.7 mm incl. masking tape
Temperature coefficient:	(11±1)x10^{-6}/K
Temperature ranges:	working temperature: -4 to +176 °F (-20 to +80 °C) storage temperature: -40 to +176 °F (-40 to +80 °C)
Mounting:	adhesive joint
Measuring:	0.1 m (to receive an optimal result of measurement, the magnetic band should be ca. 0.1 m longer than the desired measuring length)
Bending radius:	≥ 50 mm



Standard Wiring:

Pin	Signal	Color
1	0 V	WH
2	+V	BN
3	A	GN
4	$\overline{A}$	YE
5	B	GY
6	$\overline{B}$	PK
7	Z	BU
8	$\overline{Z}$	RD

Shield is on the housing

Wiring Diagram:

Male Encoder View
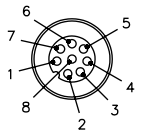
Mating Cordset: **E-RKC 8T-930-***

* Length in meters.

Part Number Key: Magnetic Sensor LM-5

A		B		C	D		E
LM-5	-	P10	-	2R	050	-	C

A	Type
LM-5	Linear Magnetic

B	Housing
P10	10 mm, IP68/IP69K
Q10	10 mm, IP67

C	Voltage Supply and Output Type
2R	4.8-30 VDC, Push-Pull
4K	4.8-26 VDC, RS422

D	Resolution [1]
050	25 µm
250	5 µm

[1] with quadruple evaluation

E	Type of Connection
C	Cable (2 m PUR)
C*-E-RSS8T	Cable w/ *m M12 Eurofast Connector

* Not available > 2 m

Part Number Key: Magnetic Band LMT-5

A		B
LMT-5	-	0010

A	Type
LMT-5	10 mm, Linear Magnetic Tape, 5 mm Pole Gap

B	Length*
0010	1 m
0050	5 m
0100	10 m

*Other lengths < 50 m available on request

Accessories:

- See page H1, Connectivity, for cables and connectors

We reserve the right to make technical alterations without prior notice.

Linear Magnetic Measurement System LM-5/LMT-5

Dimensions: Magnetic Sensor LM-5-*10

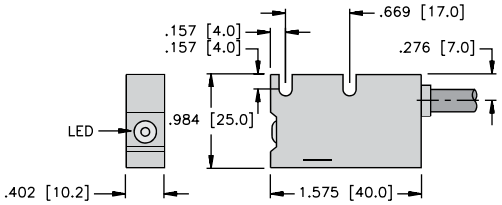

Permissible Mounting Tolerances:

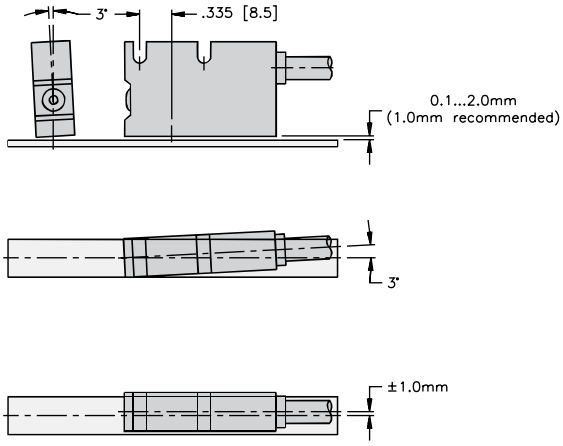

Dimensions: Magnetic Band LMT-5

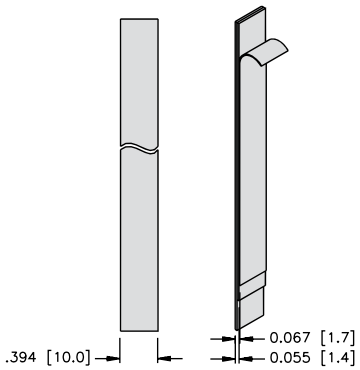

We reserve the right to make technical alterations without prior notice.

Absolute Linear Magnetic Measurement System LMA-1

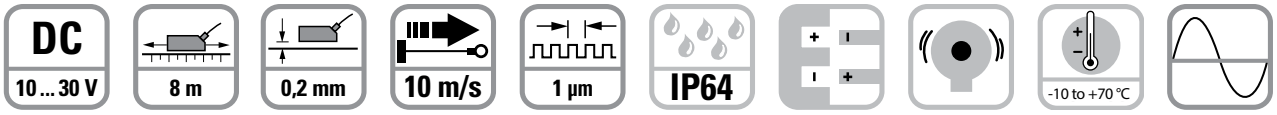

Power supply | Max measuring length | Max distrance to tap | Max speed | High resolution | Protection | Reverse polarity protection | Shock/vibration resistant | Temperature range | SinCos

Robust

- **Non-contact magnetic absolute measuring technology - therefore no wear - no referencing movement required.**
- **Sturdy housing with IP64 protection**.
- **For highly dynamic control**.
- **Stainless steel tape protecting the magnetic band.**



RoHS compliant

SSI

Simple Installation

- **Fast start-up of the measuring system:** Easy attachment of the magnetic band and the sensor head.
- **Easy mounting with large tolerances possible**:
  Distance of sensor head to magnetic band from 0.01 to 0.2 mm;
  tolerates lateral misalignment +1 mm;
  LED warning indicator when magnetic field is too weak.

Versatile

- **High resolution 1 µm / measuring length max. 8 m.**
- **Optional SinCos signal (1 Vpp) for dynamic movement control with 1 mm pole pitch**

Technical Data Magnetic Sensor LMA-1:

Mechanical characteristics	
Weight:	approx. 0.22 lbs (0.1 kg)
Working temperature:	+14 to +157 °F (-10 to +70 °C) (non condensing)
Storage temperature:	-13 to +185 °F (-25 to +85 °C)
Protection acc. to EN 60529:	IP64
Housing:	aluminum
Max. speed:	
SinCos reading	32.8 ft/s (10 m/s)
permanent absolute positions reading	3.28 ft/s (1 m/s)
Shock resistance acc. to EN 60068-2-27:	500g (5000 m/s^2), 1 ms
Vibration resistance acc. to EN 60068-2-6:	30g (300 m/s^2), 10-2000 Hz
Distance sensor head / magnetic band:	0.01 - 0.2 mm incl. masking tape (recommended 0.2 mm)
Measuring length:	max. 8 m
Type of connection (standard):	M12 connector, 12 pin

Electrical characteristics:	
Power supply:	10-30 VDC ±10%
Residual ripple:	< 10 %
Current consumption:	max. 150 mA
Reverse polarity protection:	yes
Short circuit protected:	yes
RoHS compliant acc. to EU guideline 2011/65/EU	

Accuracy:	
Measuring principle:	absolute + incremental (option)
System accuracy at 68 °F [20 °C]:	max. ± (10 + 20 x L) µ m L = measuring length in meters
Repeat accuracy:	±1 increment
Resolution:	0.001 mm
LED, red:	lights up when distance too large

We reserve the right to make technical alterations without prior notice.

Linear Magnetic Measurement System LMA-1

SSI interface:	
Output driver:	RS485 transceiver type
Permissible load / channel:	max. ±20 mA
Signal level:	
HIGH	typ. 3.8 V
LOW at ILoad = 20 mA	typ. 1.3 V
Clock rate:	25 bit (24 + 1 failurebit for distance)
Code:	Gray
SSI clock rate:	80 kHz - 0.4 MHz
Monoflop time:	≤ 40 µs
Data refresh rate:	≤ 250 µs
Option SinCos interface:	
Max. frequency -3dB:	400 kHz
Signal level:	1 Vpp (±10%)
Short circuit protected:	yes
Pulse rate:	1 SinCos per 1 mm pole
Magnetic band LMAT-1:	
Pole gap:	basic pole pitch1 mm
Dimensions:	
width	10 mm
thickness	1.97 mm incl. masking tape
Relative linear expansion:	$\Delta L = L \times \alpha \times \Delta\delta$ L = measuring length in meters $\alpha = 16 \times 10^{-6}$ 1/K temperature coefficient $\Delta\delta$ = relative temperature change based on +68 °F [20 °C] in °K
Working temperature:	-4 to +176 °F [-20 to +80 °C]
Mounting:	adhesive joint
Additional length:	100 mm in order to obtain an optimal measuring result, the magnetic band should be about 0.1 m longer than the required measuring length
Min. bending radius for storage:	≥ 150 mm
Material metal tape:	precision steel strip 1.4404 acc. to EN 10088-3

We reserve the right to make technical alterations without prior notice.

Accessories:

- See page H1, Connectivity, for cables and connectors

Linear Magnetic Measurement System LMA-1

Standard Wiring:

Output Circuit 3C (Gray code):

Connection Type	Common (0V)	+V	+Clock	-Clock	+Data	-Data	-	-	-	-	-	-
M12 Eurofast:	1	2	3	4	5	6						

Output Circuit 3G (Gray code + SinCos):

Connection Type	Common (0V)	+V	+Clock	-Clock	+Data	-Data	A	$\overline{A}$	B	$\overline{B}$	-	-
M12 Eurofast:	1	2	3	4	5	6	7	8	9	10		

Wiring Diagram:

Male Encoder View
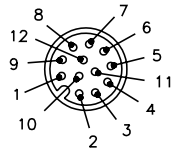
Mating Cordset: **RKC 12T-*/S618**

* Length in meters.

We reserve the right to make technical alterations without prior notice.

Linear Magnetic Measurement System LMA-1

Part Number Key: Magnetic Sensor LMA-1

A		B		C		D
LMA-1	-	Q16	-	3C25B	-	H11121

A	Type
LMA-1	Linear Magnetic, Absolute

B	Housing
Q16	16 mm, IP64

C	Voltage Supply and Output Type
3C25B	10-30 VDC, SSI, 25-bit Gray Code
3G25B	10-30 VDC, SSI, 25-bit Gray Code Plus SinCos 1 Vpp

D	Type of Connection
H11121	12-pin M12 Eurofast Connector

Part Number Key: Magnetic Band LMAT-1

A		B
LMAT-1	-	0005

A	Type
LMAT-1	10 mm, Linear Magnetic Tape, 1 mm Pole Gap

B	Length*		
0005	0.5 m	0040	4.0 m
0010	1.0 m	0060	6.0 m
0020	2.0 m	0080	8.0 m
0030	3.0 m	-	-

*measuring range = Length - 0.1 m

Accessories:

- See page H1, Connectivity, for cables and connectors

We reserve the right to make technical alterations without prior notice.

Linear Magnetic Measurement System LMA-1

Permissible Mounting Tolerances:

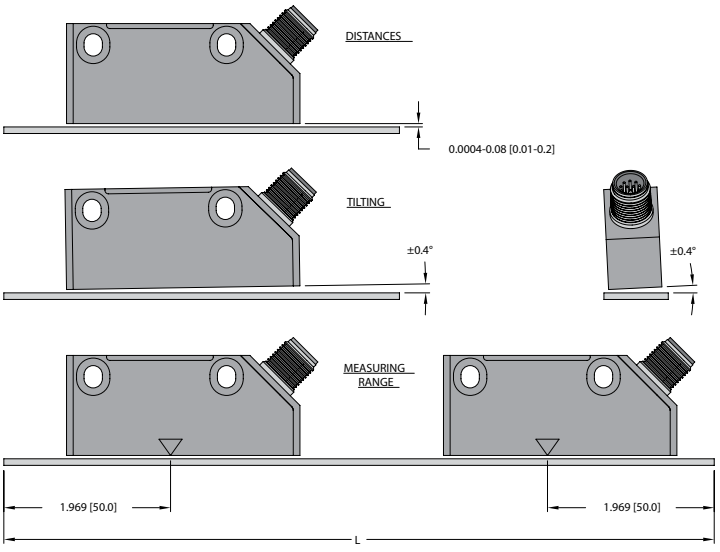

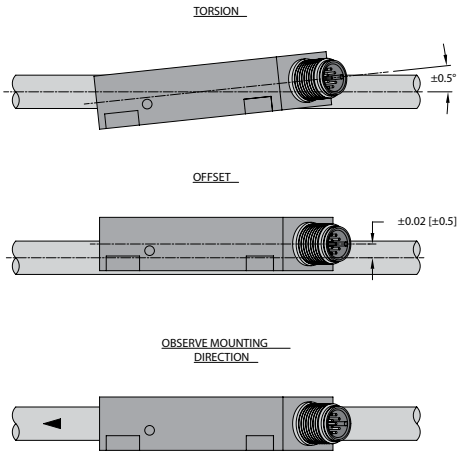

Dimensions: LMA-1

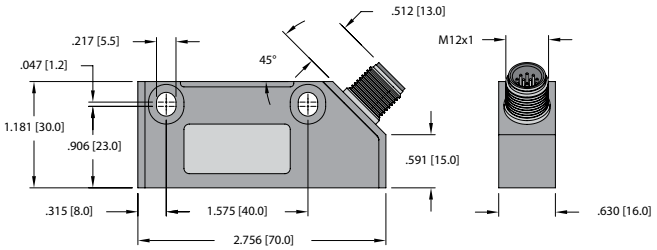

Magnetic Band LMAT-1

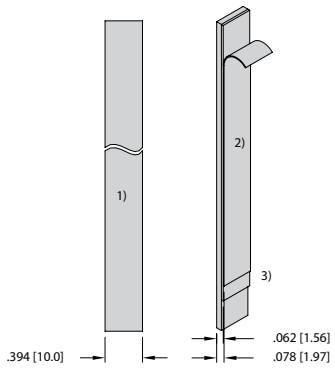

1) Length L, max 8 m
2) Masking tape
3) Magnetic band

We reserve the right to make technical alterations without prior notice.

Turck Inc. | 3000 Campus Drive, Minneapolis, MN 55441 | T +1 800 544 7769 | F +1 763 553 0708 | www.turck.com

Absolute Linear Magnetic Measurement System LMA-4

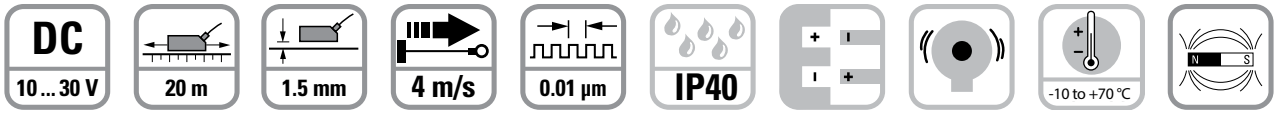

Power Supply | Max measuring length | Max distance to measuring tape | Max speed | High resolution | Protection | Reverse polarity protection | Shock/vibration resistant | Temperature range | Magnetic sensor

Robust

- **Rugged die-cast zinc housing.**
- **Position changes are also detected when de-energized**. No referencing movement required - no wear.
- **Automatic distance detection in case of too large distance between the sensor and the magnetic band**.
- **Stainless Steel tape protecting the magnetic band.**
- **Interfaces:** SSI



RoHS compliant

SSI

Versatile

- **Resolution 0.01 mm / measuring length max. 20 m.**
- **Large mounting tolerances.**

Simple Installation

- **Simple glued assembly of the magnetic band.**
- **Requires very little installation space.**
- **LED warning signals in case of too weak magnetic field.**

We reserve the right to make technical alterations without prior notice.

Technical Data Magnetic Sensor LMA-4:

Mechanical characteristics:	
Weight:	approx. 0.41 lbs (0.19 kg)
Working temperature:	+14 to +158 °F (-10 to +70 °C) (non condensing)
Storage temperature:	-13 to +185 °F (-25 to +85 °C)
Protection acc. to EN 60529:	IP40
Housing:	zinc die-cast
Max. speed:	13.1 ft/s (4 m/s)
Shock resistance acc. to EN 60068-2-27:	500g (5000 m/s^2), 1 ms
Vibration resistance acc. to EN 60068-2-6:	30g (300 m/s^2), 10-2000 Hz
Distance sensor head / magnetic band:	0.1 - 1.5 mm incl. masking tape (recommended 0.5 mm)
Measuring length:	max. 20 m
Type of connection (standard):	cable, 1.5 m PUR

Electrical characteristics:	
Power supply:	10-30 VDC ±10%
Residual ripple:	< 10 %
Current consumption:	max. 150 mA
Reverse polarity protection:	yes
Short circuit proof:	yes
RoHS compliant acc. to EU guideline 2011/65/EU	

Accuracy:	
Measuring principle:	absolute
System accuracy at 68 °F [20 °C]:	max. ± (150 + 20 x L) µ m L = measuring length in meters
Repeat accuracy:	±1 increment
Resolution:	0.01 mm
LED, red:	lights up when distance too large

Linear Magnetic Measurement System LMA-4

SSI interface:	
Output driver:	RS485 transceiver type
Permissible load / channel:	max. ±20 mA
Signal level: HIGH LOW at ILoad = 20 mA	 typ. 3.8 V typ. 1.3 V
Clock rate:	25 bit (24 + 1 failure bit for distance)
Code:	binary/gray (default) switchable
SSI clock rate:	80 kHz - 0.4 MHz
Monoflop time:	≤ 40 µs
Data refresh rate:	≤ 250 µs
Magnetic Band LMAT-4:	
Pole Gap:	Basic pole pitch 5 mm
Dimensions: width: thickness:	 20 mm 1.8 mm incl. stainless steel tape
Relative linear expansion:	$\Delta L = L \times \alpha \times \Delta\delta$ L = measuring length in meters $\alpha = 16 \times 10^{-6}$ 1/K temperature coefficient $\Delta\delta$ = relative temperature change based on +68 °F [20 °C] in °K
Working temperature:	-4 to +158 °F (-20 to +70 °C)
Storage temperature:	-4 to +176 °F (-20 to +80 °C)
Mounting:	adhesive joint
Additional length:	100 mm. In order to obtain an optimal measuring result, the magnetic band should be about 0.1 m longer than the required measuring length
Min. bending radius for storage:	≥150 mm
Material metal tape:	precision steel strip 1.4404 acc. to EN 10088-3

We reserve the right to make technical alterations without prior notice.

Standard Wiring:

Output Circuit JC

Connection Type:	Common (0 V)	+V	+Clock	-Clock	+Data	-Data	-	-	PE
Cable:	WH	BN	YE	OR	GN	PK	GY	BK	shield[1)]

[1)]Connect shielding only on machine side

Accessories:

- See page H1, Connectivity, for cables and connectors

Linear Magnetic Measurement System LMA-4

Part Number Key: Magnetic Sensor LMA-4

A		B		C		D
LMA-4	-	Q24	-	JC25B	-	C1.5M

A	Type
LMA-4	Linear Magnetic, Absolute

B	Housing
Q24	24 mm, IP40

C	Voltage Supply and Type
JC25B	10-30VDC, SSI, 25-bit Gray/Binary Code

D	Type of Connection
C1.5M	Radial Cable (1.5 m PUR)

Part Number Key: Magnetic Band LMAT-4

A		B
LMAT-4	-	0010

A	Type
LMAT-4	20 mm, Linear Magnetic Tape, 1 mm Pole Gap

B	Length*		
0010	1.0 m	0060	6.0 m
0020	2.0 m	0100	10.0 m
0040	4.0 m	0200	20.0 m
0050	5.0 m	-	-

*measuring range = Length - 0.1 m

Dimensions: Magnetic Sensor LMA-4

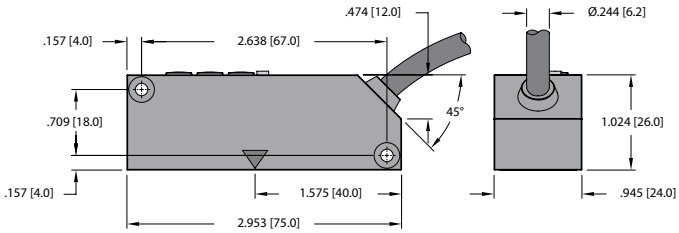

Dimensions: Magnetic Band LMAT-4

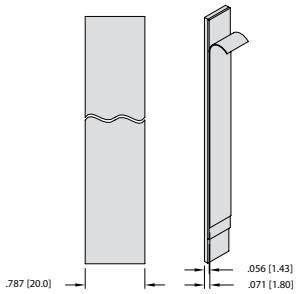

Permissible Mounting Tolerances:

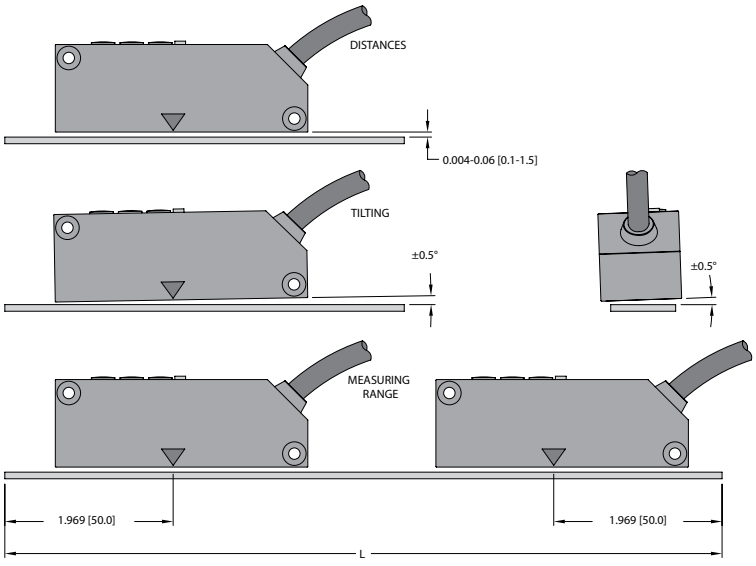

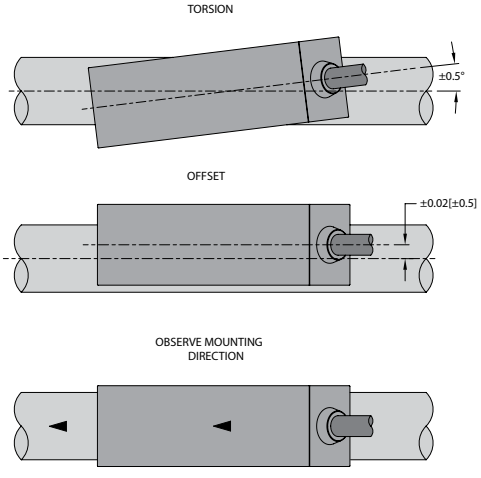

We reserve the right to make technical alterations without prior notice.

Draw Wire Encoder DW33



Temperature range | Maximum speed | High protection level

Miniaturized
- **Measuring length up to 600 mm.**
- **Wide temperature range.**

RoHS compliant

Analog output



Simple
- **For applications with low travel speeds.**
- **Easy to install.**

Versatile
- **Available with potentiometer, voltage or current outputs.**

Mechanical Characteristics (Draw Wire Mechanics):

Extension force:	Fmin	0.67 lbs (3.0 N)
Max. speed:		2.62 ft/s (0.8 m/s)
Linearity:		±0.35%
Repeat accuracy:		±0.15 mm
Working temperature:		+14 to +176 °F (-10 to +80 °C)
Weight:		approx. 0.13 lbs (60 g)
Materials:		housing: plastic wire: stainless steel Ø 0.4 mm, plastic coated
Protection (acc. to EN 60529):		IP50

Operating Principle:

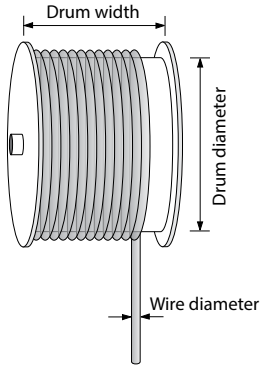

Construction:
The core of a draw wire device is a drum mounted on bearings, onto which a wire is wound. Winding takes place via a spring-loaded device.

Note:
Exceeding the maximum extension length of the draw wire will lead to damage to the wire and the mechanics.

We reserve the right to make technical alterations without prior notice.

Turck Inc. | 3000 Campus Drive, Minneapolis, MN 55441 | T +1 800 544 7769 | F +1 763 553 0708 | www.turck.com

Draw Wire Encoder DW33

Electrical Characteristics (Analog Output):

Analog output [Key code]:	0-10 V [8D]	4-20 mA [7F]	Potentiometer [PB]
Supply voltage:	15-28 VDC	15-28 VDC	max. 48 VDC
Output:	0-10 V	4-20 mA	10 kOhm
Connection diagrams:	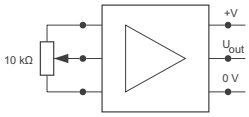	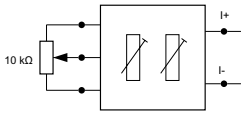	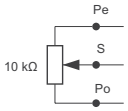
Recommended load current:	15 mA	-	-
Load:	-	max. 500Ω	-
Temperature range:	-14 to +176 °F (-10 to +80 °C)	-14 to +176 °F (-10 to +80 °C)	-14 to +176 °F (-10 to +80 °C)

ROHS compliant according to EU guidline 2011/65/EU

Standard Wiring:

Color	BN	WH	GN
0-10 VDC	+24 VDC	0 V	U_{out}
4-20 mA	+I	-I	N/C
Potentiometer	Po	Pe	S

Accessories:

- See page H1, Connectivity, for cables and connectors

We reserve the right to make technical alterations without prior notice.

Draw Wire Encoder DW33

Part Number Key: DW33 with Analog Sensor

A	B		C		D		E
DW	300	-	33	-	7F	-	C0.5M

A	Type
DW	Draw Wire

B	Measuring Range
300	300 mm Steel Wire[1)]
600	600 mm Steel Wire

[1)]Not suitable with output code 'PB'

C	Housing
33	33 mm

D	Voltage Supply and Output Type
7F	15-28 VDC, 4-20 mA
8D	15-28 VDC, 0-10 V
PB	48 VDC max, 10 kΩ Potentiometer

E	Type of Connection
C0.5M	Radial Cable (0.5 m PUR)

We reserve the right to make technical alterations without prior notice.

Turck Inc. | 3000 Campus Drive, Minneapolis, MN 55441 | T +1 800 544 7769 | F +1 763 553 0708 | www.turck.com

Draw Wire Encoder DW33

Dimensions: DW33

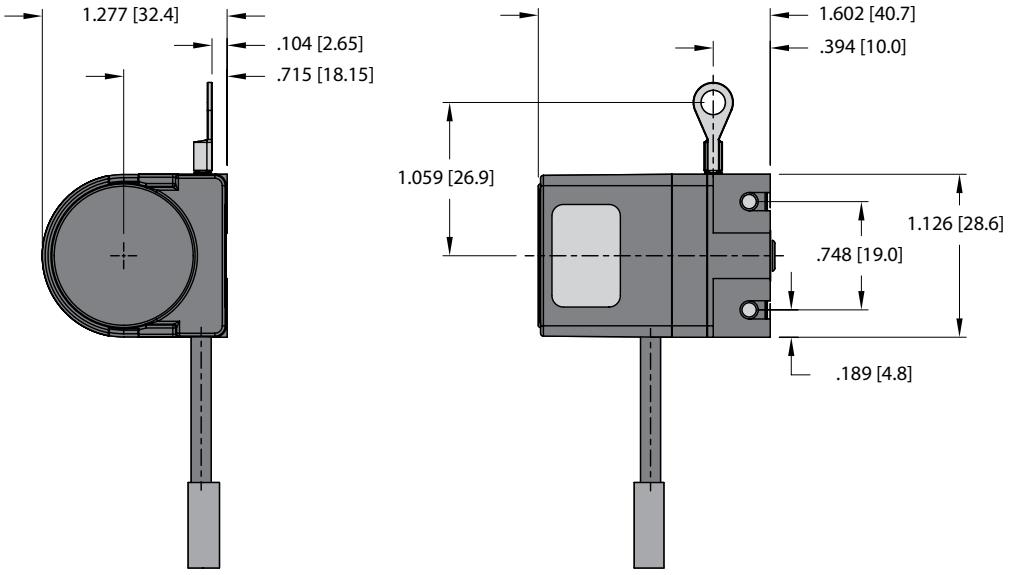

We reserve the right to make technical alterations without prior notice.

Mini Draw Wire Encoder DW55



Temperature | Short-circuit protected | Reverse polarity protection

Rugged
- Reinforced plastic housing (1 m wire).
- Stainless steel cable
- Zinc die cast housing (2 m wire).



RoHS compliant | SSI | BiSS INTERFACE | Analog output | CANopen | SAE J1939

Versatile
- Radial or axial cable exit.
- Analog outputs 4-20 mA, 0-10 V or resistance.
- Incremental push-pull output.
- Absolute encoder output options.

Compact
- Measuring length up to 2,000 mm.
- 40 x 40 x 58 mm housing (1 m wire).
- 40 x 40 x 72.3 mm housing (2 m wire).

Mechanical Characteristics (Draw Wire Mechanics):

Measuring range:	1,000 mm	2,000 mm
Max. speed:	2.62 ft/s (0.8 m/s)	3.28 ft/s (1.0 m/s)
Working temperature	+32 to +122 °F (0 to +50 °C)	+14 to +176 °F (-10 to +80 °C)
Protection acc. to EN60529:	IP50	IP65
Weight:	approx. 0.44 lbs (0.2 kg)	0.7 lbs (0. 32 kg)
Required force:	0.45 lbs (2N)	0.45 lbs (2N)
Repeat accuracy:	±0.15 mm	±0.15 mm
Linearity:	±0.35%	±0.35%
Material:	Housing: plastic/zinc die cast Wiring: stainless steel Ø 0.45 mm, plastic coated	
Electrical Characteristics (Absolute Encoder):	The electrical characteristics of the draw wire encoder assembly may be found in the catalog pages of the encoder selected.	

We reserve the right to make technical alterations without prior notice.

Turck Inc. | 3000 Campus Drive, Minneapolis, MN 55441 | T +1 800 544 7769 | F +1 763 553 0708 | www.turck.com

Mini Draw Wire Encoder DW55

Mechanical Characteristics (Draw wire with incremental encoder):

Measuring range:	up to 2,000 mm
Absolute accuracy:	±0.1% for the whole measuring range
Repetition accuracy:	±0.15 mm per direction of travel
Resolution (incremental):	0.1 mm (0.025 mm post-quadrature) [standard encoder with 1,000 ppr.]
Traversing speed:	max. 2.62 ft/s (800 mm/s)
Required force:	approx. 2.25 lbs (10 N) (on wire)
Material:	Housing: reinforced plastic, Wire: stainless steel ø 0.45 mm, plastic coated
Weight:	approx. 0.463 lbs (0.210 kg)
Protection acc. to EN 60529:	IP54 from housing side
Working temperature:	-4 to +185 °F (-20 to +85 °C)
Shock resistance acc. to DIN-IEC 68-2-27:	100 g (1,000 m/s²), 6 ms
Vibration resistance acc. to DIN-IEC 68-2-27:	10 g (100 m/s²), 55-2,000 Hz
	The electrical characteristics of the draw wire encoder assembly may be found in the catalog pages of the encoder selected.

Electrical Characteristics (Absolute Encoder):

The electrical characteristics of the draw wire encoder assembly may be found in the catalog pages of the encoder selected.

Electrical Characteristics (Incremental Output):

Output circuits [Key Code]:	Push-Pull [2D]	Push-Pull [2A]
Supply voltage:	5-24 VDC	8-30 VDC
Current consumption (without load):	max. 50 mA	max. 50 mA
Permitted load per channel:	max. ±50 mA	max. ±50 mA
Pulse rate:	max. 160 kHz	max. 160 kHz
Switching level high:	min. +V – 2.5 V	min. +V – 3 V
Switching level low:	max. 0.5 V	max. 2.5 V
Rise time tr:	max. 1 µs	max. 1 µs
Fall time tf:	max. 1 µs	max. 1 µs
Short-circuit protected:	yes	yes
Electrical Characteristics (Absolute Encoder):	The electrical characteristics of the draw wire encoder assembly may be found in the catalog pages of the encoder selected.	

Description of the Incremental Encoder (Connected on Load Side)

- Compensation for temperature and aging
- Short-circuit protected outputs
- Reverse polarity protected power-supply input
- Push-pull output

Electrical Characteristics (Analog Output):

Analog output [Key Code]:	0-10 V [8C]	4-20 mA [7F]	Potentiometer 10 kΩ [PB]
Supply voltage:	15-28 VDC	15-28 VDC	Max. 48 VDC
Temperature range:	+32 to +122 °F (0 to +50 °C)	+32 to +122 °F (0 to +50 °C)	+32 to +122 °F (0 to +50 °C)
Load:	max 500 Ω	max 500 Ω	-
Connection diagrams:	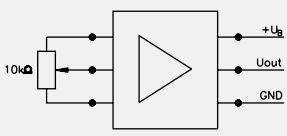	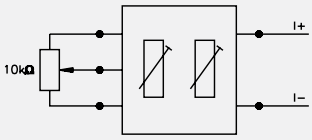	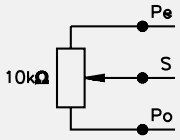

RoHS Compliant acc. to EU guideline 2011/65/EU

We reserve the right to make technical alterations without prior notice.

Mini Draw Wire Encoder DW55

Part Number Key: DW55 with Encoder

A	B		C		D		E		F
DW	2000	-	55	-	46	-	3C12S12M	-	CT1M

A	Type
DW	Draw Wire

B	Measuring Range
2000	2 m Steel Wire, IP65

C	Housing
55	40 mm

D	Encoder Type
46	RM-46, Absolute, SSI
47	RM-47, Absolute, CANopen
99	RM-99, Absolute, SSI
101	RM-101, Absolute, CANopen, SAE J1939

E	Voltage Supply and Output Type
Dependent on Encoder Selected [1)]	

F	Type of Connection
Dependent on Encoder Selected [1)]	

[1)] Recommended encoders listed below

Standard resolutions for draw wire with absolute encoder
RM-46/RM-99 (12-bit ST) or RM-47/RM-101 (12-bit ST, programmable via the bus)

Drum circumference (mm)	1000
Pulses/revolution (ppr)	4096
Pulses/mm	41
Resolution (mm)	0.02

Recommended standard variants (with absolute encoder)

Draw wire assembly	Mounted encoder	Interface	Power supply	Type of connection	Resolution / Protocol	Option
DW2000-55-99-3C12S12M-H1181	RM-99T6S-3C12S12M-H1181	SSI	10-30 VDC	Radial M12 connector	4096 ppr / SSI-Gray-Code	-
DW2000-55-101-9D38B-H1151	RM-101T6S-9D38B-H1151	CANopen	10-30 VDC	Radial M12 connector	CANopen encoder profile DS406 V4.0	-
DW2000-55-101-9F43B-H1151	RM-101T6S-9F43B-H1151	SAE J1939	10-30 VDC	Radial M12 connector	CAN high-speed acc. to ISO 11898, CAN specification 2.0 B	-
DW2000-55-46-3C12S12M-CT1M	RM-46T6S-3C12S12M-CT1M	SSI	10-30 VDC	Tangential cable, 1 m	4096 ppr / SSI-Gray-Code	-
DW2000-55-47-9D32B-CT1M	RM-47T6S-9D32B-CT1M	CANopen	10-30 VDC	Tangential cable, 1 m	CANopen encoder profile DS406 V3.2	-

We reserve the right to make technical alterations without prior notice.

Turck Inc. | 3000 Campus Drive, Minneapolis, MN 55441 | T +1 800 544 7769 | F +1 763 553 0708 | www.turck.com

Mini Draw Wire Encoder DW55

Part Number Key: DW55 with Encoder (analog, scalable with limit switch function)

A	B		C		D		E		F
DW	2000	-	55	-	97	-	7ASALWL	-	H1151

A	Type
DW	Draw Wire

B	Measuring Range
2000	2 m Steel Wire, IP65

C	Housing
55	40 mm

D	Encoder Type
97	RM-97, Absolute, Analog

E	Voltage Supply and Output Type
	Dependent on Encoder Selected [1]

F	Type of Connection
	Dependent on Encoder Selected [1]

[1] Recommended encoders listed below

Recommended standard variants (with analog encoder, scalable with limit switch function)

Draw wire assembly	Mounted encoder	Interface	Power supply	Type of connection	Resolution / Protocol	Option
DW2000-55-97-7ASALWL-H1151	RM-97T6S-7ASALWL-H1151	Analog, 4-20 mA	10-30 VDC	Radial M12 connector	12 Bit / 4-20 mA	scalable with limit switch function [1]
DW2000-55-97-8BSALWL-H1151	RM-97T6S-8BSALWL-H1151	Analog, 0-10 V	15-30 VDC	Radial M12 connector	12 Bit / 0-10 V	scalable with limit switch function [1]
DW2000-55-97-7ASALNS-H1151	RM-97T6S-7ASALNS-H1151	Analog, 4-20 mA	10-30 VDC	Radial M12 connector	12 Bit / 4-20 mA	scalable without limit switch function [1]
DW2000-55-97-8BSALNS-H1151	RM-97T6S-8BSALNS-H1151	Analog, 0-10 V	15-30 VDC	Radial M12 connector	12 Bit / 0-10 V	scalable without limit switch function [1]

[1] Unscaled

Part Number Key: DW55 Incremental

A	B		C		D		E	F		G
DW	1000	-	55	-	01	-	2A	1000	-	CA

A	Type
DW	Draw Wire

B	Measuring Range
1000	1 m Steel Wire
2000	2 m Steel Wire

C	Housing
55	40 mm

D	Encoder Type
01	RI-01, Incremental

E	Voltage Supply and Output Type
2A	8-30 VDC, Push-Pull (w/ Inverted Signals)
2D	5-24 VDC, Push-Pull (w/ Inverted Signals)

F	Pulse Rate
	1000

G	Type of Connection
CA	Axial Cable (2 m PVC)

Standard Wiring:

Color:	Signal:
WH	Common
BN	+V
GN	A
YE	$\overline{A}$
GY	B
PK	$\overline{B}$
BU	Z
RD	$\overline{Z}$

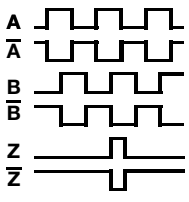

* Index present every 100 mm every linear travel.

We reserve the right to make technical alterations without prior notice.

Mini Draw Wire Encoder DW55

Part Number Key: DW55 Analog Sensor

A	B		C		D		E
DW	1000	-	55	-	7F	-	H1141

A	Type
DW	Draw Wire

B	Measuring Range
1000	1 m Steel Wire, IP50
2000	2 m Steel Wire, IP65

C	Housing
55	40 mm

D	Voltage Supply and Output Type
7F	15-28 VDC, 4-20 mA
8D	15-28 VDC, 0-10 V
PB	48 VDC max, 10 kΩ, Potentiometer

E	Type of Connection
H1141	Radial 4-pin M12 Eurofast Connector [1]
C	Radial Cable (2 m PVC) [1]
CA	Axial Cable (2 m PVC) [2]

[1] Only available with measuring range '2000'
[2] Only available with measuring range '1000'

Standard Wiring:

Color	WH	BN	GN
Pin M12	2	1	3/BU
4-20 mA	*-I	+I	N/C
0-10 VDC	GND	15-28 V	V_{out}
Pot. 10 kΩ	Pe, end position	Po, start position	Wiper contact

* Loop powered

Wiring Diagram:

Male Encoder View

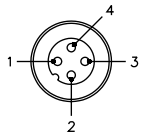

Mating Cordset:
RK 4.4T-*/S618

* Length in meters.

We reserve the right to make technical alterations without prior notice.

Turck Inc. | 3000 Campus Drive, Minneapolis, MN 55441 | T +1 800 544 7769 | F +1 763 553 0708 | www.turck.com

Mini Draw Wire Encoder DW55

Dimensions: DW55 with RM-46/47 Encoder

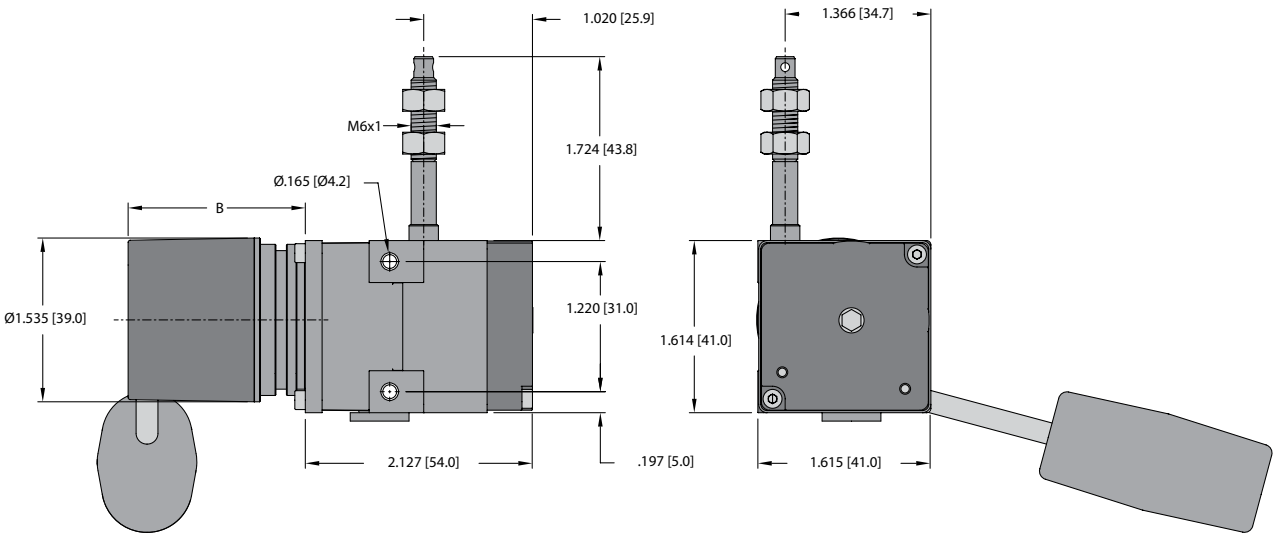

Dimension B depends on the encoder used

Encoder	**B** in. [mm]
DW2000-55-46-******_*****	1.56 [39.70]
DW2000-55-47-******_*****	1.56 [39.70]

Dimensions: DW55 with RM-97/99/101 Encoder

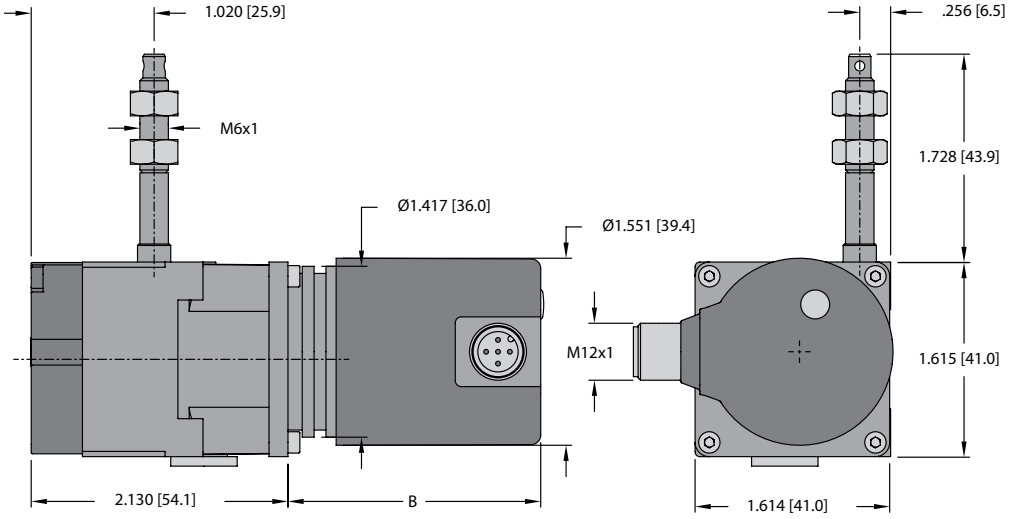

Dimension B depends on the encoder used

Encoder	**B** in. [mm]
DW2000-55-97-******_*****	2.10 [53.25]
DW2000-55-99-******_*****	2.10 [53.25]
DW2000-55-101-******_*****	2.10 [53.25]

Accessories:

- See page H1, Connectivity, for cables and connectors

We reserve the right to make technical alterations without prior notice.

Mini Draw Wire Encoder DW55

Dimensions: DW55 Incremental

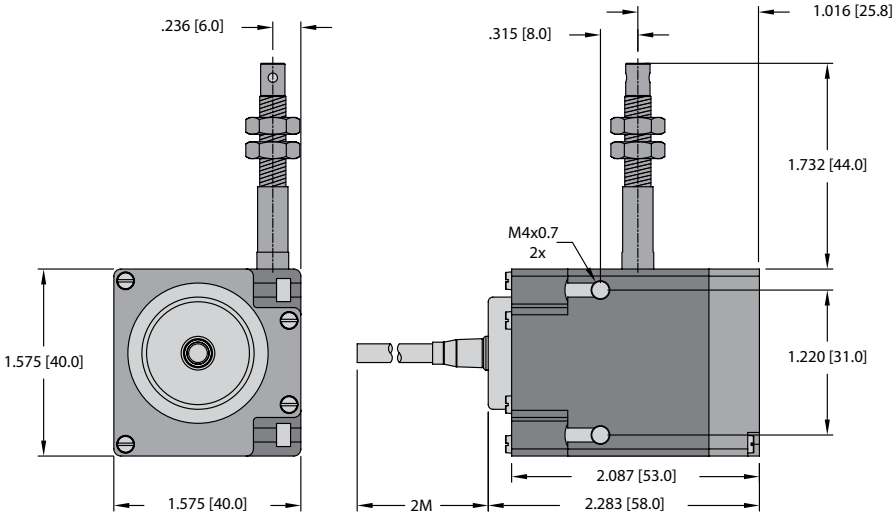

Dimensions: DW1000-55--CA**

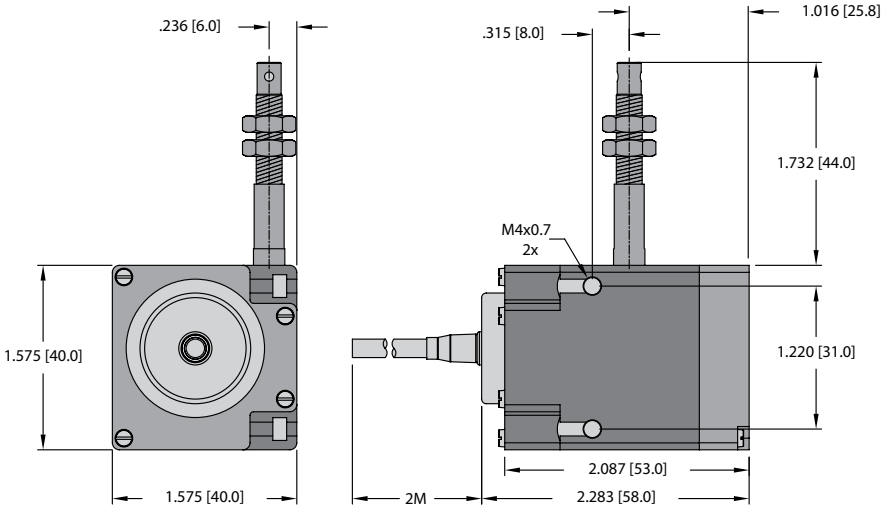

Accessories:

- See page H1, Connectivity, for cables and connectors

We reserve the right to make technical alterations without prior notice.

Mini Draw Wire Encoder DW55

Dimensions: DW2000-55--C**

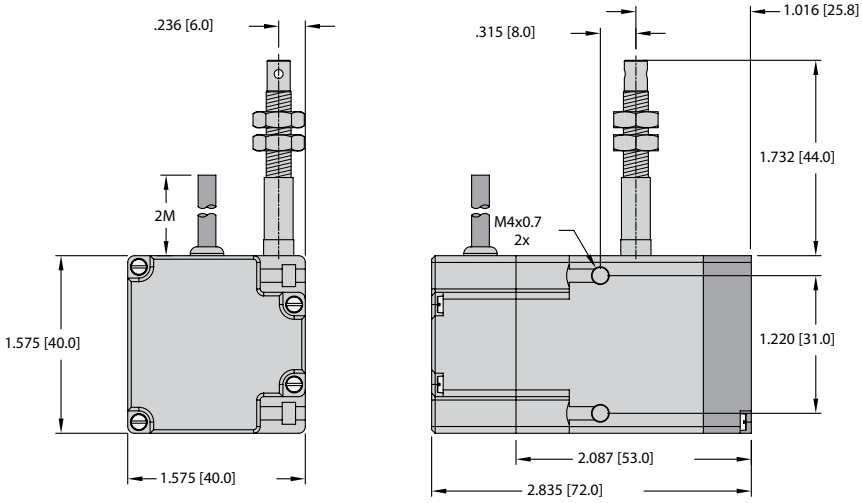

Dimensions: DW2000-55--H1141**

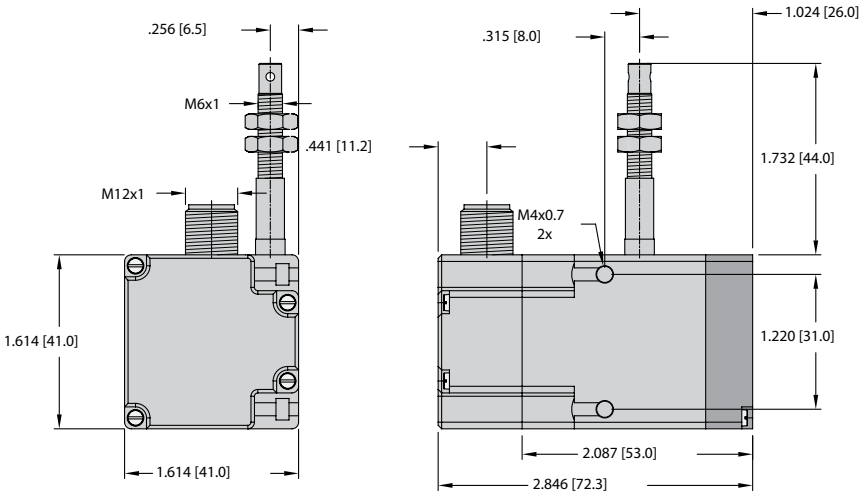

Accessories:

- See page H1, Connectivity, for cables and connectors

We reserve the right to make technical alterations without prior notice.

Draw Wire Encoder DW70



Wide temperature range | Reverse polarity protection | Maximum acceleration | Long service life | High protection level

Robust

- **Corrosion resistant:** Titanium-anodized aluminium housing.
- **High-strength stainless steel draw wire.**
- **Low friction design.** Diamond-polished ceramic guide.
- **Wide temperature range.**



RoHS compliant
SSI
Analog output
CANopen
SAE J1939

Fast

- **High traverse speed.**
- **High acceleration:** Dynamic spring traction by means of a constant force spring.

Versatile

- **Suitable for various sensors/encoders:** Absolute encoders with fieldbus interfaces, incremental, and analog.
- **Quick mounting:** Fastening by means of two screws.
- **Flexible connection options:** Cable, M12 connector, radial, axial.
- **Linearity up to 0.02%.**

Mechanical Characteristics (Draw Wire Mechanics):

Measuring range:		250 mm	500 mm	1250 mm
Extension force:	Fmin	1.53 lbs (6.8 N)	0.76 lbs (3.4 N)	0.92 lbs (4.1 N)
	Fmax	1.78 lbs (7.9 N)	0.90 lbs (4.0 N)	1.21 lbs (5.4 N)
Max. speed:		26.2 ft/s (8 m/s)	26.2 ft/s (8 m/s)	32.8 ft/s (10 m/s)
Max. acceleration:		656.16 ft/s² (200 m/s²)	656.16 ft/s² (200 m/s²)	984.25 ft/s² (300 m/s²)
Linearity (of measuring range):				
analog sensor		±0.15%	±0.15%	±0.1%
encoder		±0.05%	±0.05%	±0.02%
Weight:		approx. 0.72 lbs(330 g) (depending on the sensor/encoder used)		
Materials:		housing: titanium-anodized aluminium wire: stainless steel Ø 0.5 mm		
Protection (encoder only):		IP65		

Operating Principle:

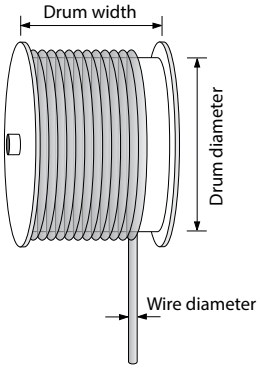

Construction:
The core of a draw wire device is a drum mounted on bearings, onto which a wire is wound. Winding takes place via a spring-loaded device.

Note:
Exceeding the maximum extension length of the draw wire will lead to damage to the wire and the mechanics.

We reserve the right to make technical alterations without prior notice.

Turck Inc. | 3000 Campus Drive, Minneapolis, MN 55441 | T +1 800 544 7769 | F +1 763 553 0708 | www.turck.com

Draw Wire Encoder DW70

Electrical Characteristics (Analog Output):

Analog output [Key code]:	0-10 V [8C]	4-20 mA [7E]	Potentiometer [PA]
Output:	0-10 V galvanically isolated, 4 conductors	4-20 mA, 2 conductors	1 kOhm
Supply voltage:	12-30 VDC	12-30 VDC	max. 30 VDC
Recommended slider current:	-	-	< 1 µA
Max. current consumption:	22.5 mA (no load)	50 mA	-
Reverse polarity protection:	yes	yes	-
Operating temperature:	-4 to +185 °F (-20 to +85 °C)	-4 to +185 °F (-20 to +85 °C)	-4 to +185 °F (-20 to +85 °C)
Connection diagrams:	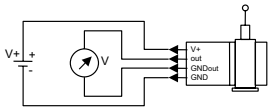	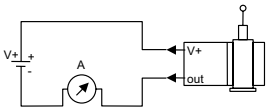	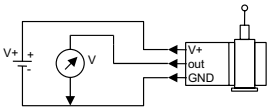

ROHS compliant according to EU guideline 2011/65/EU

Electrical Characteristics (Digital Output):

The electrical characteristics of the draw wire encoder assembly may be found in the catalog pages of the encoder selected.

Accessories:

- See page H1, Connectivity, for cables and connectors

We reserve the right to make technical alterations without prior notice.

Draw Wire Encoder DW70

Part Number Key: DW70 with Encoder

A	B		C		D		E	F		G		H
DW	250	-	70	-	04	-	2H	1250	-	H1181	/	Specials

A	Type
DW	Draw Wire

B	Measuring Range
250	250 mm Steel Wire
500	500 mm Steel Wire
1250	1250 mm Steel Wire

C	Housing
70	50 mm

D	Encoder Type
04	RI-04, Incremental
46	RM-46, Absolute, SSI
47	RM-47, Absolute, CANopen
99	RM-99, Absolute, SSI
101	RM-101, Absolute, CANopen, SAE J1939

E	Voltage Supply and Output Type
Dependent on Encoder Selected [1)]	

F	Pulse Rate/Resolution
Dependent on Encoder Selected [1)]	

G	Type of Connection
Dependent on Encoder Selected [1)]	

[1)]Recommended encoders listed below

Standard resolutions for draw wire with incremental encoder RI-04

Drum circumference (mm)	125	125	125
Pulses/revolution (ppr)	125	1250	2500
Pulses/mm	1	10	20
Resolution (mm)	1	0.1	0.05

Standard resolutions for draw wire with absolute encoder RM-46, RM-47, RM-99 or RM-101, (12-bit ST, programable via bus)

Drum circumference (mm)	125
Pulses/revolution (ppr)	4096
Pulses/mm	32.8
Resolution (mm)	0.03

Recommended standard variants (with incremental, absolute encoder)

Draw wire assembly	Mounted encoder	Interface	Power supply	Type of connection	Resolution / Protocol	Option
DWxxxx-70-04-2H1250-C	RI-04Q6S-2H1250-C	Push-pull with inverted signal	8-30 VDC	Radial cable 2 M	1250 ppr	-
DWxxxx-70-99-3C12S12M-H1181	RM-99T6S-3C12S12M-H1181	SSI	10-30 VDC	Radial M12 connector	4096 ppr / SSI-Gray-Code	-
DWxxxx-70-101-9D38B-H1151	RM-101T6S-9D38B-H1151	CANopen	10-30 VDC	Radial M12 connector	CANopen encoder profile DS406 V4.0	-
DWxxxx-70-101-9F43B-H1151	RM-101T6S-9F43B-H1151	SAE J1939	10-30 VDC	1 x radial M12 connector	CAN high-speed acc. to ISO 11898, CAN specification 2.0 B	-

Other variants (with absolute encoder)

Draw wire assembly	Mounted encoder	Interface	Power supply	Type of connection	Resolution / Protocol	Option
DWxxxx-70-46-3C12S12M-CT1M	RM-46T6S-3C12S12M-CT1M	SSI	10-30 VDC	Tangential cable 1 M	4096 ppr / SSI-Gray-Code	-
DWxxxx-70-47-9D32B-CT1M	RM-47T6S-9D32B-CT1M	CANopen	10-30 VDC	Tangential cable 1 M	CANopen encoder profile DS406 V3.2	-

We reserve the right to make technical alterations without prior notice.

Draw Wire Encoder DW70

Part Number Key: DW70 with Encoder(analog, scalable with limit switch function)

A	B		C		D		E	F		G		H
DW	250	-	70	-	97	-	7A	SALNS	-	H1151	/	Specials

A	Type
DW	Draw Wire

B	Measuring Range
250	250 mm Steel Wire
500	500 mm Steel Wire
1250	1250 mm Steel Wire

C	Housing
70	50 mm

D	Encoder Type
97	RM-97, Absolute, Analog

E	Voltage Supply and Output Type
	Dependent on Encoder Selected [1]

F	Measuring Range
	Dependent on Encoder Selected [1]

G	Type of Connection
	Dependent on Encoder Selected [1]

[1] Recommended encoders listed below

Recommended standard variants (with analog encoder, scalable with limit switch function)

Draw wire assembly	Mounted encoder	Interface	Power supply	Type of connection	Resolution / Protocol	Option
DWxxxx-70-97-7ASALNS-H1151	RM-97T6S-7ASALNS-H1151	Analog, 4-20 mA	10-30 VDC	Radial M12 connector	12 Bit / 4-20 mA	scalable without limit switch function [1]
DWxxxx-70-97-8BSALNS-H1151	RM-97T6S-8BSALNS-H1151	Analog, 0-10 V	15-30 VDC	Radial M12 connector	12 Bit / 0-10 V	scalable without limit switch function [1]
DWxxxx-70-97-7ASALWL-H1151	RM-97T6S-7ASALWL-H1151	Analog, 4-20 mA	10-30 VDC	Radial M12 connector	12 Bit / 4-20 mA	scalable with limit switch function [2]
DWxxxx-70-97-8BSALWL-H1151	RM-97T6S-8BSALWL-H1151	Analog, 0-10 V	15-30 VDC	Radial M12 connector	12 Bit / 0-10 V	scalable with limit switch function [2]

[1] Sealed to measuring range
[2] Unscaled

Part Number Key: DW70 with Analog Sensor

A	B		C		D		E
DW	250	-	70	-	7E	-	H1441

A	Type
DW	Draw Wire

B	Measuring Range
250	250 mm Steel Wire
500	500 mm Steel Wire
1250	1250 mm Steel Wire

C	Housing
70	50 mm

D	Voltage Supply and Output Type
7E	12-30 VDC, 4-20 mA
8C	12-30 VDC, 0-10 V
PA	30 VDC max, 1 kΩ, Potentiometer

E	Type of Connection
H1441	Axial 4-pin M12 Eurofast Connector
CA	Axial Cable (2 m PVC)

Standard Wiring (Analog Sensor):

Pin	Color	0-10 V	4-20 mA	1 kOhm
1	BN	V+	V+	V+
2	WH	Signal	N/C	Slider
3	BU	GND	Signal	GND
4	BK	GND Sig.	N/C	N/C

Wiring Diagram (Analog Sensor):

Male Encoder View

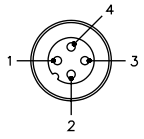

Mating Cordset:
RK 4.4T-*/S618

* Length in meters.

We reserve the right to make technical alterations without prior notice.

Draw Wire Encoder DW70

Dimensions: DW70 with Encoder

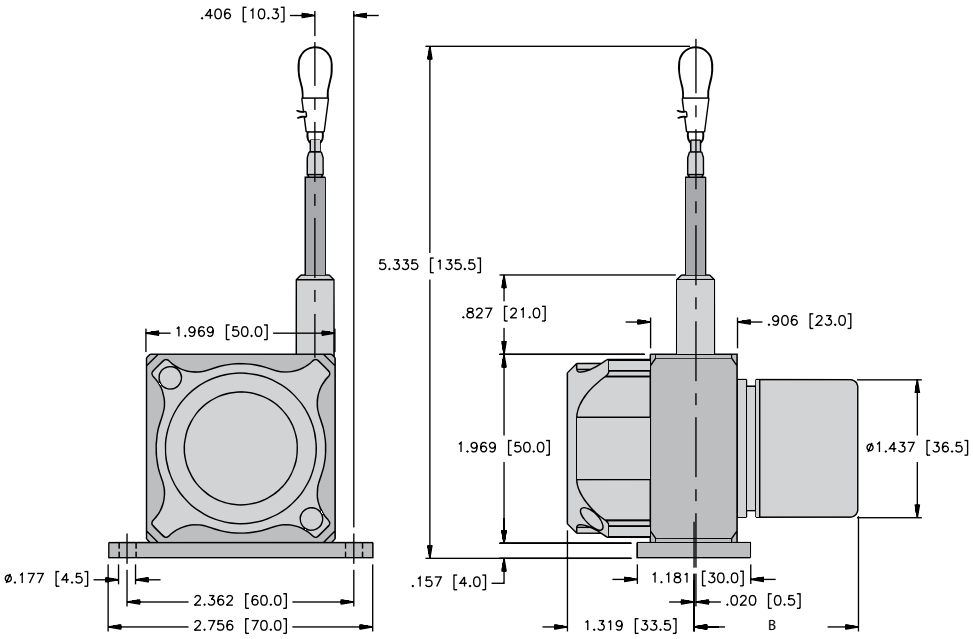

Dimension B depends on the encoder used

Encoder	Draw wire assembly	**B** in. [mm]
Incremental (RI-04)	DW*****-70-09-******-*****	1.69 [43.0]
Absolute (RM-97)	DW*****-70-97-******-*****	2.46 [62.45]
Absolute (RM-99)	DW*****-70-99-******-*****	2.46 [62.45]
Absolute (RM-101)	DW****-70-101-******-*****	2.46 [62.45]
Absolute (RM-46)	DW*****-70-46-******-*****	2.02 [51.2]
Absolute (RM-47)	DW*****-70-47-******-*****	2.02 [51.2]

We reserve the right to make technical alterations without prior notice.

Turck Inc. | 3000 Campus Drive, Minneapolis, MN 55441 | T +1 800 544 7769 | F +1 763 553 0708 | www.turck.com

Draw Wire Encoder DW70

Dimensions: DW70 with Analog Sensor

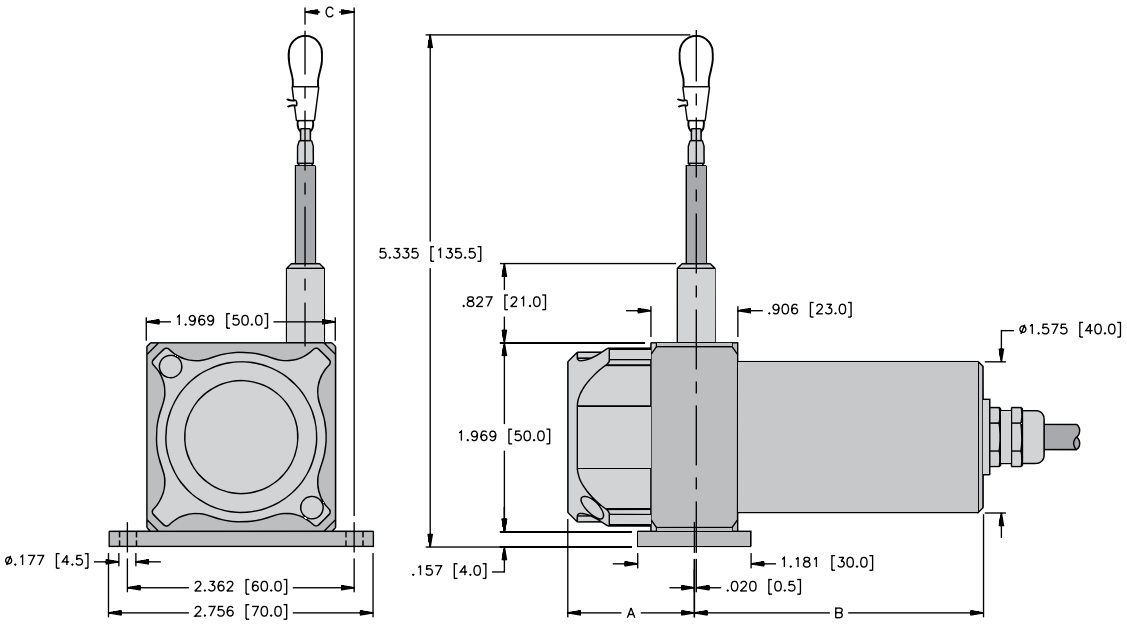

Sensor Type	Measuring Length	A in. [mm]	B in. [mm]	C in. [mm]
Potentiometer	250 mm	1.043 [26.5]	2.559 [65]	0.840 [21.3]
	500 mm	1.043 [26.5]	2.559 [65]	0.50 [12.75]
	1,250 mm	1.319 [33.5]	2.559 [65]	0.406 [10.3]
0-10 V 4-20 mA	250 mm	1.043 [26.5]	3.091 [78.5]	0.840 [21.3]
	500 mm	1.043 [26.5]	3.091 [78.5]	0.50 [12.75]
	1,250 mm	1.319 [33.5]	3.091 [78.5]	0.406 [10.3]

We reserve the right to make technical alterations without prior notice.

Draw Wire Encoder DW110



Wide temperature range | Reverse polarity protection | Max acceleration | Long service life | High protection level

Robust

- **Corrosion resistant:** Titanium-anodized aluminium housing.
- **High-strength stainless steel draw wire.**
- **Low friction design.** Diamond-polished ceramic guide.
- **Wide temperature range**.



RoHS compliant
SSI
PROFIBUS
PROFINET
EtherCAT Conformance tested
Analog output
CANopen
SAE J1939
EtherNet/IP

Fast

- **High traverse speed.**
- **High acceleration:** Dynamic spring traction by means of a constant force spring.

Versatile

- **Suitable for various sensors/encoders:** Absolute, fieldbus, incremental and analog.
- **Quick mounting:** Fastening by means of two screws.
- **Flexible connection options:** Cable, connector, radial, axial.
- **Linearity up to 0.05%**.

Mechanical Characteristics (Draw Wire Mechanics):

Measuring range:		1000 mm	2000 mm	3000 mm
Extension force:	Fmin	1.55 lbs (6.9 N)	1.44 lbs (6.4 N)	1.55 lbs (6.9 N)
	Fmax	1.87 lbs (8.3 N)	1.75 lbs (7.8 N)	2.20 lbs (9.8 N)
Max. speed:		32.8 ft/s (10 m/s)	32.8 ft/s (10 m/s)	32.8 ft/s (10 m/s)
Max. acceleration:		459.3 ft/s² (140 m/s²)	459.3 ft/s² (140 m/s²)	459.3 ft/s² (140 m/s²)
Linearity (of measuring range):				
	analog sensor	±0.15%	±0.1%	±0.1%
	encoder	±0.05%	±0.05%	±0.05%
Weight:		approx. 750 g (depending on the sensor/encoder used)		
Materials:		housing: titanium-anodized aluminium wire: stainless steel Ø 0.5 mm		
Protection (encoder only):		IP65		

Operating Principle:

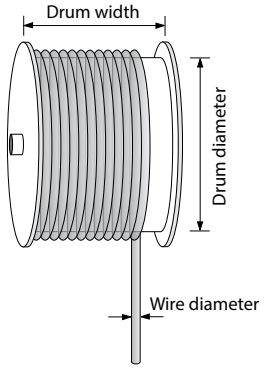

Construction:
The core of a draw wire device is a drum mounted on bearings, onto which a wire is wound. Winding takes place via a spring-loaded device.

Note:
Exceeding the maximum extension length of the draw wire will lead to damage to the wire and the mechanics.

We reserve the right to make technical alterations without prior notice.

Turck Inc. | 3000 Campus Drive, Minneapolis, MN 55441 | T +1 800 544 7769 | F +1 763 553 0708 | www.turck.com

Draw Wire Encoder DW110

Electrical Characteristics (Analog Output):

Analog output [Key Code]:	0-10 V [8C]	4-20 mA [7E]	Potentiometer [PA]
Output:	0-10 V galvanically isolated, 4 conductors	4-20 mA, 2 conductors	1 kOhm
Supply voltage:	12-30 VDC	12-30 VDC	max. 30 VDC
Recommended slider current:	-	-	< 1 µA
Max. current consumption:	22.5 mA (no load)	50 mA	-
Reverse polarity protection:	yes	yes	-
Operating temperature:	-4 to +185 °F (-20 to +85 °C)	-4 to +185 °F (-20 to +85 °C)	-4 to +185 °F (-20 to +85 °C)
Connection diagrams:	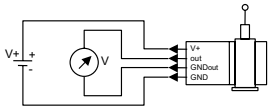	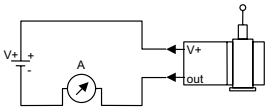	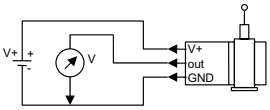
ROHS compliant according to EU guideline 2011/65/EU			

Electrical Characteristics (Digital Output):

The electrical characteristics of the draw wire encoder assembly may be found in the catalog pages of the encoder selected.

Part Number Key: DW110 with Encoder

A	B		C		D		E	F		G		H
DW	1000	-	110	-	10	-	2B	2000	-	H1181	/	Specials

A	Type
DW	Draw Wire

B	Measuring Range
1000	1000 mm Steel Wire
2000	2000 mm Steel Wire
3000	3000 mm Steel Wire

C	Housing
110	80 mm

D	Encoder Type
10	RI-10, Incremental
28	RM-28, Absolute, SSI
29	RM-29, Absolute, CANopen, EtherCAT, PROFIBUS-DP, PROFINET IO
103	RM-103, Absolute, SSI
105	RM-105, Absolute, CANopen, EtherNet/IP, Modbus
118	RM-118, Absolute, SSI
121	RM-121, Absolute, CANopen, SAE J1939

E	Voltage Supply and Output Type
Dependent on Encoder Selected [1)]	

F	Pulse Rate/Resolution
Dependent on Encoder Selected [1)]	

G	Type of Connection
Dependent on Encoder Selected [1)]	

H	Specials
N85	Interchangeable Installation *
Dependent on Encoder Selected [1)]	

[1)]Recommended encoders listed below
*Optional

Accessories:

- See page H1, Connectivity, for cables and connectors

We reserve the right to make technical alterations without prior notice.

Draw Wire Encoder DW110

Standard resolutions for draw wire with incremental encoder RI-10, drum circumference 200 mm

Encoder PPR	200	2000	4000
Pulses/mm	1	10	20
Resolution (mm)	1	0.1	0.05

Standard resolutions for draw wire with absolute encoder RM-118 or RM-121, drum circumference 200 mm

Pulses/revolution	4096
Pulses/mm	20.5
Resolution (mm)	0.05

Recommended standard variants (with incremental, absolute encoder)

Draw wire assembly	Mounted encoder	Interface	Power supply	Type of connection	Resolution / Protocol	Option
DWxxxx-110-10-2B2000-H1181	RI-10T10C-2B2000-H1181	Push-pull with inverted signal	10-30 VDC	Radial M12 connector	2000 ppr	-
DWxxxx-110-118-3C12S12M-H1181	RM-118T10C-3C12S12M-H1181	SSI	10-30 VDC	Radial M12 connector	4096 ppr / SSI-Gray-Code	-
DWxxxx-110-121-9D38B-H1151	RM-121T10C-9D38B-H1151	CANopen	10-30 VDC	Radial M12 connector	CANopen encoder profile DS406 V4.0	-

Other variants (with absolute encoder)

Draw wire assembly	Mounted encoder	Interface	Power supply	Type of connection	Resolution / Protocol	Option
DWxxxx-110-103-3C12S12M-H1181	RM-103T10C-3C12S12M-H1181	SSI	10-30 VDC	1 x radial M12 connector	4096 ppr / SSI-Gray-Code	SET button + status LED
DWxxxx-110-28-3C24B-H1181	RM-28T10C-3C24B-H1181	SSI	10-30 VDC	1 x radial M12 connector	4096 ppr / SSI-Gray-Code	SET button + status LED
DWxxxx-110-105-9D38B-H1151/N46	RM-105T10C-9D38B-B1M12/N46	CANopen	10-30 VDC	1 x radial M12 connector	CANopen encoder profile DS406 V3.2	SET button
DWxxxx-110-29-9D28B-R2M12/N46	RM-29T10C-9D28B-R2M12/N46	CANopen	10-30 VDC	2 x radial M12 connector	CANopen encoder profile DS406 V3.2	SET button
DWxxxx-110-121-9F43B-H1151	RM-121T10C-9F43B-H1151	SAE J1939	10-30 VDC	1 x radial M12 connector	CAN high-speed acc. to ISO 11898, CAN specification 2.0 B	-
DWxxxx-110-29-9A28B-R3M12/N46	RM-29T10C-9A28B-R3M12/N46	PROFIBUS	10-30 VDC	3 x radial M12 connector	Profibus-DP V0 encoder profile Class 2	SET button
DWxxxx-110-29-9C28B-R3M12	RM-29T10C-9C28B-R3M12	EtherCAT	10-30 VDC	3 x radial M12 connector	EtherCAT with CoE 3.2.10	-
DWxxxx-110-29-9E28B-R3M12	RM-29T10C-9E28B-R3M12	PROFINET IO	10-30 VDC	3 x radial M12 connector	PROFINET encoder profile version 4.1	-
DWxxxx-110-105-9N32B-B3M12	RM-105T10C-9N32B-B3M12	EtherNet/IP	10-30 VDC	3 x axial M12 connector	EtherNet/IP	-

We reserve the right to make technical alterations without prior notice.

Turck Inc. | 3000 Campus Drive, Minneapolis, MN 55441 | T +1 800 544 7769 | F +1 763 553 0708 | www.turck.com

Draw Wire Encoder DW110

Part Number Key: DW110 with Encoder (analog, scalable)

A	B		C		D		E	F		G		H
DW	1000	-	110	-	116	-	7A	AL	-	H1151	/	Specials

A	Type
DW	Draw Wire

B	Measuring Range
1000	1000 mm Steel Wire
2000	2000 mm Steel Wire
3000	3000 mm Steel Wire

C	Housing
110	80 mm

D	Encoder Type
116	RM-116, Absolute, Analog

E	Voltage Supply and Output Type
Dependent on Encoder Selected [1)]	

F	Measuring Range
Dependent on Encoder Selected [1)]	

G	Type of Connection
Dependent on Encoder Selected [1)]	

H	Specials
N85	Interchangeable Installation *
Dependent on Encoder Selected [1)]	

[1)]Recommended encoders listed below
*Optional

Recommended standard variants (with analog encoder, scalable with limit switch function)

Draw wire assembly	Mounted encoder	Interface	Power supply	Type of connection	Resolution / Protocol	Option
DWxxxx-110-116-7ASALNS-H1151	RM-116T10C-7ASALNS-H1151	Analog, 4-20 mA	10-30 VDC	Radial M12 connector	12 Bit / 4-20 mA	scalable without limit switch function
DWxxxx-110-116-8BSALNS-H1151	RM-116T10C-8BSALNS-H1151	Analog, 0-10 V	15-30 VDC	Radial M12 connector	12 Bit / 0-10 V	scalable without limit switch function
DWxxxx-110-116-7ASALWL-H1151	RM-116T10C-7ASALWL-H1151	Analog, 4-20 mA	10-30 VDC	Radial M12 connector	12 Bit / 4-20 mA	scalable with limit switch function
DWxxxx-110-116-8BSALWL-H1151	RM-116T10C-8BSALWL-H1151	Analog, 0-10 V	15-30 VDC	Radial M12 connector	12 Bit / 0-10 V	scalable with limit switch function

We reserve the right to make technical alterations without prior notice.

Draw Wire Encoder DW110

Part Number Key: DW110 with Analog Sensor

A	B		C		D		E
DW	1000	-	110	-	7E	-	H1441

A	Type
DW	Draw Wire

B	Measuring Range
1000	1000 mm Steel Wire
2000	2000 mm Steel Wire
3000	3000 mm Steel Wire

C	Housing
110	80 mm

D	Voltage Supply and Output Type
7E	12-30 VDC, 4-20 mA
8C	12-30 VDC, 0-10 V
PA	30 VDC max, 1 kΩ, Potentiometer

E	Type of Connection
H1441	Axial 4-pin M12 Eurofast Connector
CA	Axial Cable (2 m PVC)

Standard Wiring:

Pin	Color	0-10 V	4-20 mA	1 kOhm
1	BN	V+	V+	V+
2	WH	Signal	N/C	Slider
3	BU	GND	Signal	GND
4	BK	GND Sig.	N/C	N/C

Wiring Diagram:

Male Encoder View

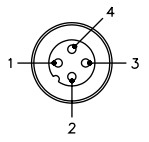

Mating Cordset:
RK 4.4T-*/S618

* Length in meters.

We reserve the right to make technical alterations without prior notice.

Draw Wire Encoder DW110

Dimensions: DW110 with Encoder (analog, scalable)

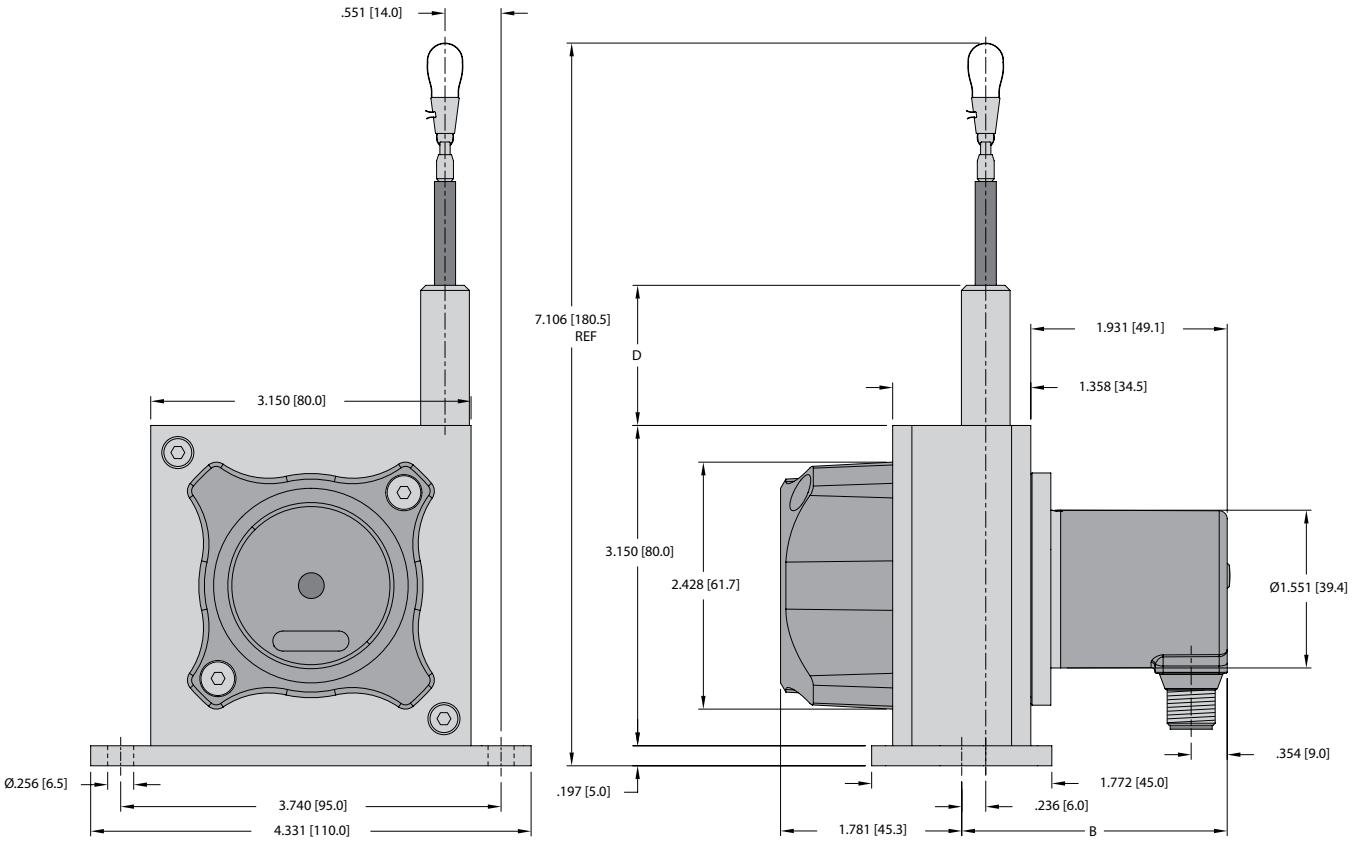

Dimension D depends on the measuring range of the draw wire

Measuring range	**D** in. [mm]
1000 mm	0.83 [21.0]
2000 mm	0.83 [21.0]
3000 mm	1.38 [35.0]

Dimension B depends on the encoder used

Encoder	Draw wire assembly	**B** in. [mm]
Incremental (RI-10)	DW****-110-10-******-*****	2.19 [55.75]
Absolute (RM-28)	DW****-110-28-******-*****	2.69 [68.25]
Absolute (RM-29)	DW****-110-29-******-*****	3.75 [95.35]
Absolute (RM-103)	DW****-110-103-******-*****	2.69 [68.25]
Absolute (RM-105) [EtherNet/IP]	DW****-135-105-******-*****	3.02 [76.75]
Absolute (RM-105) [CANopen]	DW****-110-105-******-*****	3.47 [88.25]
Absolute (RM-116)	DW****-110-116-******-*****	2.69 [68.45]
Absolute (RM-118)	DW****-110-118-******-*****	2.69 [68.45]
Absolute (RM-121)	DW****-110-121-******-*****	2.69 [68.45]

Accessories:

- See page H1, Connectivity, for cables and connectors

We reserve the right to make technical alterations without prior notice.

Draw Wire Encoder DW110

Dimensions: DW110 with Interchangeable Installation

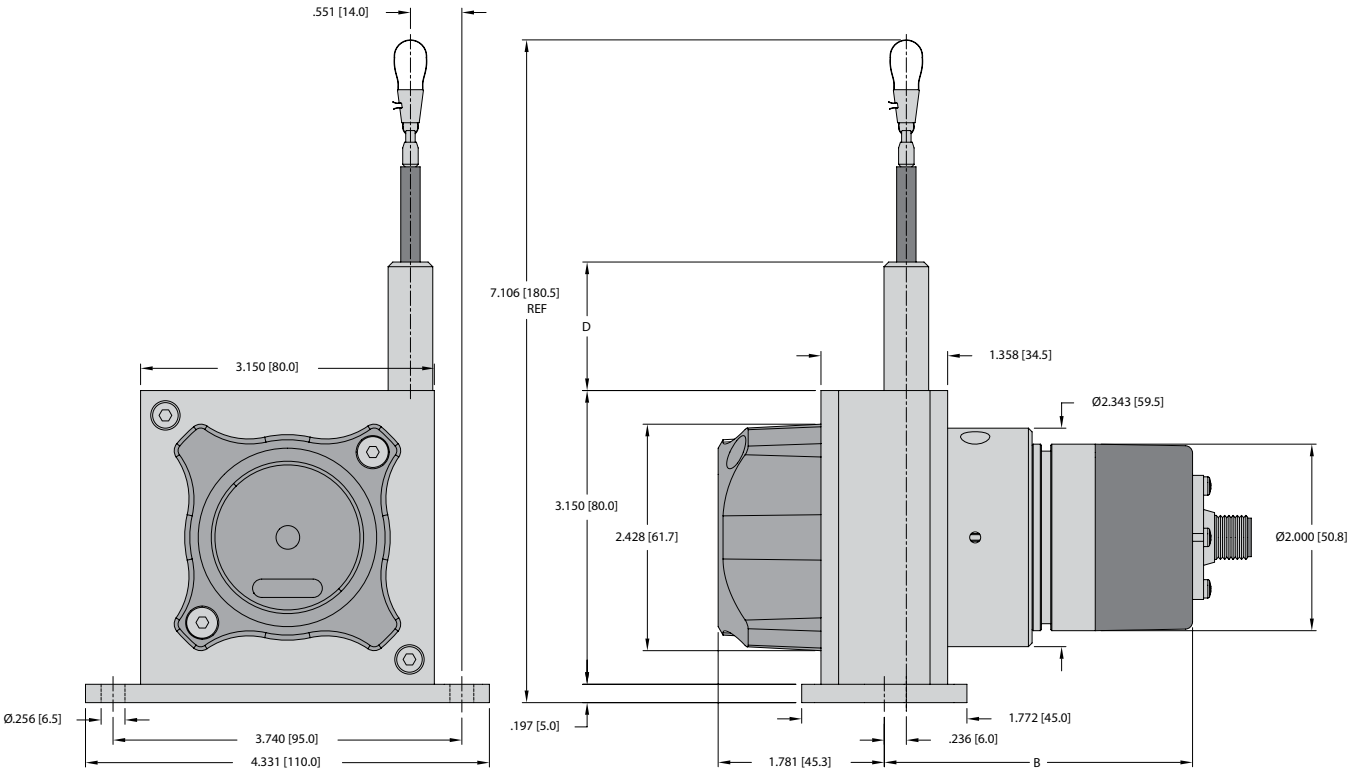

Dimension D depends on the measuring range of the draw wire

Measuring range	**D** in. [mm]
1000 mm	0.83 [21.0]
2000 mm	0.83 [21.0]
3000 mm	1.38 [35.0]

Dimension B depends on the encoder used

Encoder	Draw wire assembly	**B** in. [mm]
Incremental (RI-10)	DW****-110-10-******-*****	3.10 [78.75]
Absolute (RM-28)	DW****-110-28-******-*****	3.59 [91.25]
Absolute (RM-29)	DW****-110-29-******-*****	4.66 [118.35]
Absolute (RM-103)	DW****-110-103-******-*****	3.59 [91.25]
Absolute (RM-105) [EtherNet/IP]	DW****-135-105-******-*****	3.93 [99.75]
Absolute (RM-105) [CANopen]	DW****-110-105-******-*****	4.40 [111.25]
Absolute (RM-116)	DW****-110-116-******-*****	3.60 [91.45]
Absolute (RM-118)	DW****-110-118-******-*****	3.60 [91.45]
Absolute (RM-121)	DW****-110-121-******-*****	3.60 [91.45]

Accessories:

- See page H1, Connectivity, for cables and connectors

We reserve the right to make technical alterations without prior notice.

Draw Wire Encoder DW110

Dimensions: DW110 with Analog Sensor

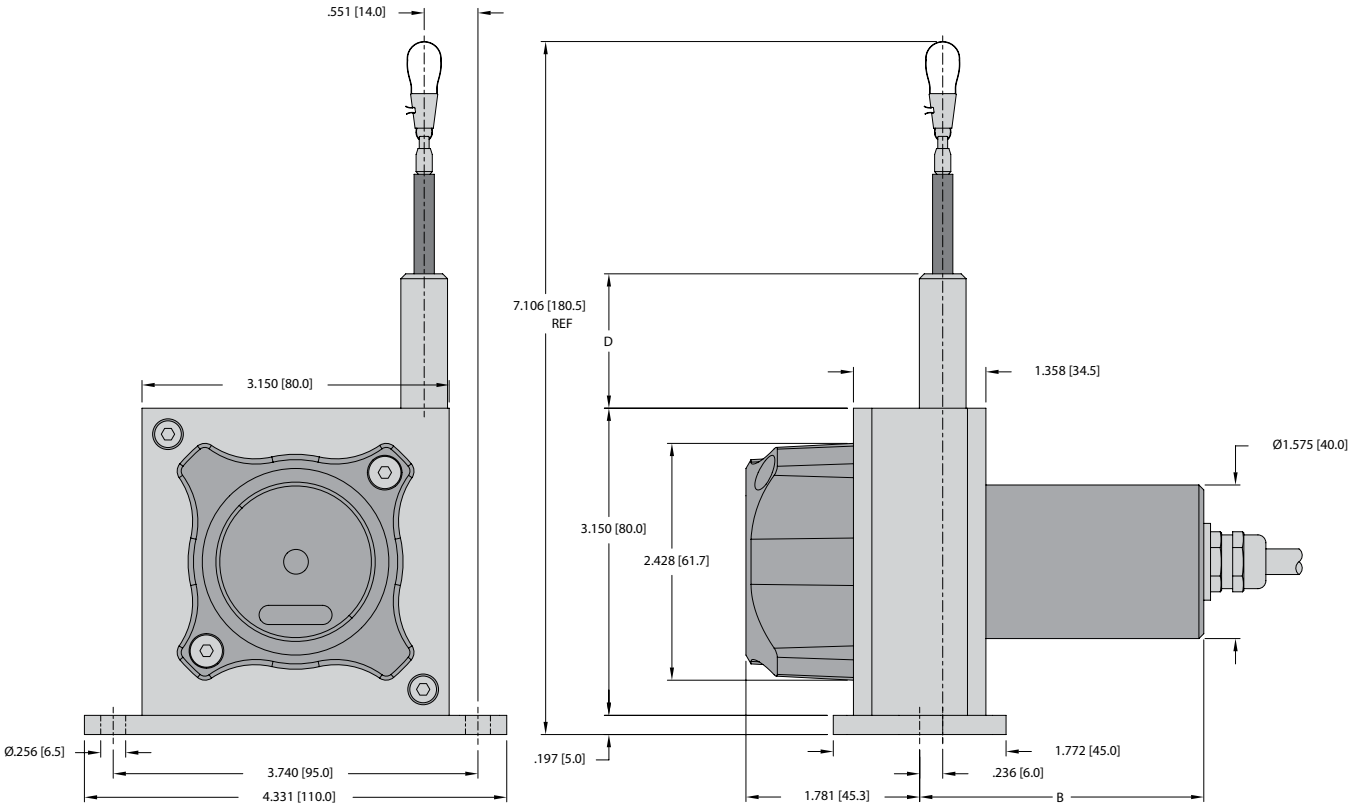

Sensor type	Measuring length	B	D
Potentiometer	1000 mm	2.91 [74.0]	0.83 [21.0]
	2000 mm	2.91 [74.0]	0.83 [21.0]
	3000 mm	4.04 [102.5]	2.56 [65.0]
4-20mA 0-10V	1000 mm	3.44 [87.5]	0.83 [21.0]
	2000 mm	3.44 [87.5]	0.83 [21.0]
	3000 mm	4.03 [102.3]	3.09 [78.5]

We reserve the right to make technical alterations without prior notice.

Draw Wire Encoder DW155

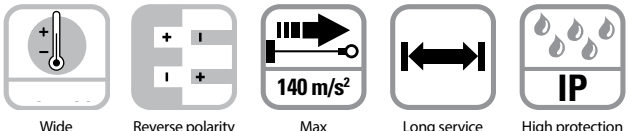

Wide temperature range | Reverse polarity protection | Max acceleration | Long service life | High protection level

Robust

- **Corrosion resistant:** Titanium-anodized aluminium housing.
- **High-strength stainless steel draw wire.**
- **Low friction design.** Diamond-polished ceramic guide.
- **Wide temperature range.**



RoHS compliant
SSI
PROFIBUS
PROFINET
EtherCAT Conformance tested
Analog output
CANopen
SAE J1939
EtherNet/IP

Fast

- **High traverse speed.**
- **High acceleration:** Dynamic spring traction by means of a constant force spring.

Versatile

- **Suitable for various sensors/encoders:** Absolute, fieldbus, incremental and analog.
- **Quick mounting:** Fastening by means of two screws.
- **Flexible connection options:** Cable, connector, radial, axial.

Mechanical Characteristics (Draw Wire Mechanics):

Measuring range:		6,000 mm (6 meter)
Extension force:	Fmin	1.98 (8.8 N)
	Fmax	2.77 lbs (12.3 N)
Max. speed:		32.8 ft/s (10 m/s)
Max. acceleration:		459.3 ft/s²(140 m/s²)
Linearity:		analog output: ±0.1% (of the measuring range) encoder: ±0.05% (of the measuring range)
Weight:		approx. 3.5 lbs (1,600 g) (depending on the sensor/encoder used)
Materials:		housing: titanium-anodized aluminium wire: stainless steel Ø 0.5 mm
Protection (encoder only):		IP65

Operating Principle:

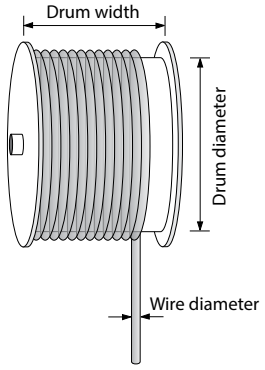

Construction:
The core of a draw wire device is a drum mounted on bearings, onto which a wire is wound. Winding takes place via a spring-loaded device.

Note:
Exceeding the maximum extension length of the draw wire will lead to damage to the wire and the mechanics.

We reserve the right to make technical alterations without prior notice.

Draw Wire Encoder DW155

Electrical Characteristics (Analog Sensor, Scaled to Measuring Range):

Analog output [Key Code]:	0-10 V [8C]	4-20 mA [7E]	Potentiometer [PA]
Output:	0-10 V galvanically isolated, 4 conductors	4-20 mA, 2 conductors	1 kOhm
Supply voltage:	12-30 VDC	12-30 VDC	max. 30 VDC
Recommended slider current:	-	-	< 1 µA
Max. current consumption:	22.5 mA (no load)	50 mA	-
Reverse polarity protection:	yes	yes	-
Operating temperature:	-4 to +185 °F (-20 to +85 °C)	-4 to +185 °F (-20 to +85 °C)	-4 to +185 °F (-20 to +85 °C)
Connection diagrams:	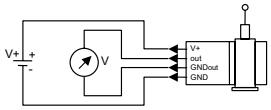	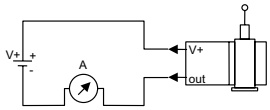	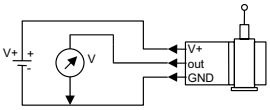

ROHS compliant according to EU guideline 2011/65/EU

We reserve the right to make technical alterations without prior notice.

Part Number Key: DW155 with Encoder

A	B		C		D		E	F		G		H
DW	4000	-	155	-	10	-	2B	2000	-	H1181	/	Specials

A	Type
DW	Draw Wire

B	Measuring Range
4000	4000 mm Steel Wire
5000	5000 mm Steel Wire
6000	6000 mm Steel Wire

C	Housing
155	120 mm

D	Encoder Type
10	RI-10, Incremental
28	RM-28, Absolute, SSI
29	RM-29, Absolute, CANopen, EtherCAT, PROFIBUS-DP, PROFINET IO
103	RM-103, Absolute, SSI
105	RM-105, Absolute, CANopen, Ethernet/IP, Modbus
118	RM-118, Absolute, SSI
121	RM-121, Absolute, CANopen, SAE J1939

E	Voltage Supply and Output Type
Dependent on Encoder Selected*	

F	Pulse Rate/Resolution
Dependent on Encoder Selected*	

G	Type of Connection
Dependent on Encoder Selected*	

H	Specials
N85	Interchangeable Installation [1]
Dependent on Encoder Selected*	

[1] Optional
*Recommended encoders listed below

Draw Wire Encoder DW155

Standard resolutions for draw wire with incremental encoder RI-10, drum circumference 317.68 mm

Encoder PPR	1000	2000	3000
Pulses/mm	3.1	6.3	12.6
Resolution (mm)	0.32	0.16	0.08

Standard resolutions for draw wire with absolute encoder RM-118 or RM-121, drum circumference 317.68 mm

Pulses/revolution (ppr)	4096
Pulses/mm	12.9
Resolution (mm)	0.08

Recommended standard variants (with incremental, absolute encoder)

Draw wire assembly	Mounted encoder	Interface	Power supply	Type of connection	Resolution / Protocol	Option
DWxxxx-155-10-2B2000-H1181	RI-10T10C-2B2000-H1181	Push-pull with inverted signal	10-30 VDC	Radial M12 connector	2000 ppr	-
DWxxxx-155-118-3C12S12M-H1181	RM-118T10C-3C12S12M-H1181	SSI	10-30 VDC	Radial M12 connector	4096 ppr / SSI-Gray-Code	-
DWxxxx-155-121-9D38B-H1151	RM-121T10C-9D38B-H1151	CANopen	10-30 VDC	Radial M12 connector	CANopen encoder profile DS406 V4.0	-

Other variants (with absolute encoder)

Draw wire assembly	Mounted encoder	Interface	Power supply	Type of connection	Resolution / Protocol	Option
DWxxxx-155-103-3C12S12M-H1181	RM-103T10C-3C12S12M-H1181	SSI	10-30 VDC	1 x radial M12 connector	4096 ppr / SSI-Gray-Code	SET button + status LED
DWxxxx-155-28-3C24B-H1181	RM-28T10C-3C24B-H1181	SSI	10-30 VDC	1 x radial M12 connector	4096 ppr / SSI-Gray-Code	SET button + status LED
DWxxxx-155-105-9D38B-H1151/N46	RM-105T10C-9D38B-B1M12/N46	CANopen	10-30 VDC	1 x radial M12 connector	CANopen encoder profile DS406 V3.2	SET button
DWxxxx-155-29-9D28B-R2M12/N46	RM-29T10C-9D28B-R2M12/N46	CANopen	10-30 VDC	2 x radial M12 connector	CANopen encoder profile DS406 V3.2	SET button
DWxxxx-155-121-9F43B-H1151	RM-121T10C-9F43B-H1151	SAE J1939	10-30 VDC	1 x radial M12 connector	CAN high-speed acc. to ISO 11898, CAN specification 2.0 B	-
DWxxxx-155-29-9A28B-R3M12/N46	RM-29T10C-9A28B-R3M12/N46	PROFIBUS	10-30 VDC	3 x radial M12 connector	Profibus-DP V0 encoder profile Class 2	SET button
DWxxxx-155-29-9C28B-R3M12	RM-29T10C-9C28B-R3M12	EtherCAT	10-30 VDC	3 x radial M12 connector	EtherCAT with CoE 3.2.10	-
DWxxxx-155-29-9E28B-R3M12	RM-29T10C-9E28B-R3M12	PROFINET IO	10-30 VDC	3 x radial M12 connector	PROFINET encoder profile version 4.1	-
DWxxxx-155-105-9N32B-B3M12	RM-105T10C-9N32B-B3M12	EtherNet/IP	10-30 VDC	3 x axial M12 connector	EtherNet/IP	-

We reserve the right to make technical alterations without prior notice.

Turck Inc. | 3000 Campus Drive, Minneapolis, MN 55441 | T +1 800 544 7769 | F +1 763 553 0708 | www.turck.com

Draw Wire Encoder DW155

Part Number Key: DW155 with Encoder (analog, scalable)

A	B		C		D		E	F		G		H
DW	1000	-	155	-	116	-	7A	AL	-	H1151	/	Specials

A	Type
DW	Draw Wire

B	Measuring Range
1000	1000 mm Steel Wire
2000	2000 mm Steel Wire
3000	3000 mm Steel Wire

C	Housing
155	120 mm

D	Encoder Type
116	RM-116, Absolute, Analog

E	Voltage Supply and Output Type
Dependent on Encoder Selected [1)]	

F	Measuring Range
Dependent on Encoder Selected [1)]	

G	Type of Connection
Dependent on Encoder Selected [1)]	

H	Specials
N85	Interchangeable Installation [1)]
Dependent on Encoder Selected*	

[1)]Optional
*Recommended encoders listed below

Recommended standard variants (with analog encoder, scalable with limit switch function)

Draw wire assembly	Mounted encoder	Interface	Power supply	Type of connection	Resolution / Protocol	Option
DWxxxx-155-116-7ASALNS-H1151	RM-116T10C-7ASALNS-H1151	Analog, 4-20 mA	10-30 VDC	Radial M12 connector	12 Bit / 4-20 mA	scalable without limit switch function
DWxxxx-155-116-8BSALNS-H1151	RM-116T10C-8BSALNS-H1151	Analog, 0-10 V	15-30 VDC	Radial M12 connector	12 Bit / 0-10 V	scalable without limit switch function
DWxxxx-155-116-7ASALWL-H1151	RM-116T10C-7ASALWL-H1151	Analog, 4-20 mA	10-30 VDC	Radial M12 connector	12 Bit / 4-20 mA	scalable with limit switch function
DWxxxx-155-116-8BSALWL-H1151	RM-116T10C-8BSALWL-H1151	Analog, 0-10 V	15-30 VDC	Radial M12 connector	12 Bit / 0-10 V	scalable with limit switch function

Accessories:

- See page H1, Connectivity, for cables and connectors

We reserve the right to make technical alterations without prior notice.

Draw Wire Encoder DW155

Part Number Key: DW155 with Analog Sensor

A	B		C		D		E
DW	4000	-	155	-	7E	-	H1441

A	Type
DW	Draw Wire

B	Measuring Range
4000	4000 mm Steel Wire
5000	5000 mm Steel Wire
6000	6000 mm Steel Wire

C	Housing
155	120 mm

D	Voltage Supply and Output Type
7E	12-30 VDC, 4-20 mA
8C	12-30 VDC, 0-10 V
PA	30 VDC max, 1 kΩ, Potentiometer

E	Type of Connection
H1441	Axial 4-pin M12 Eurofast Connector
CA	Axial Cable (2 m PVC)

Standard Wiring:

Pin	Color	0-10 V	4-20 mA	1 kOhm
1	BN	V+	V+	V+
2	WH	Signal	N/C	Slider
3	BU	GND	Signal	GND
4	BK	GND Sig.	N/C	N/C

Wiring Diagram:

Male Encoder View

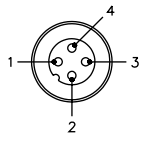

Mating Cordset:
RK 4.4T-*/S618

* Length in meters.

Accessories:

- See page H1, Connectivity, for cables and connectors

We reserve the right to make technical alterations without prior notice.

Draw Wire Encoder DW155

Dimensions: DW155 with Encoder

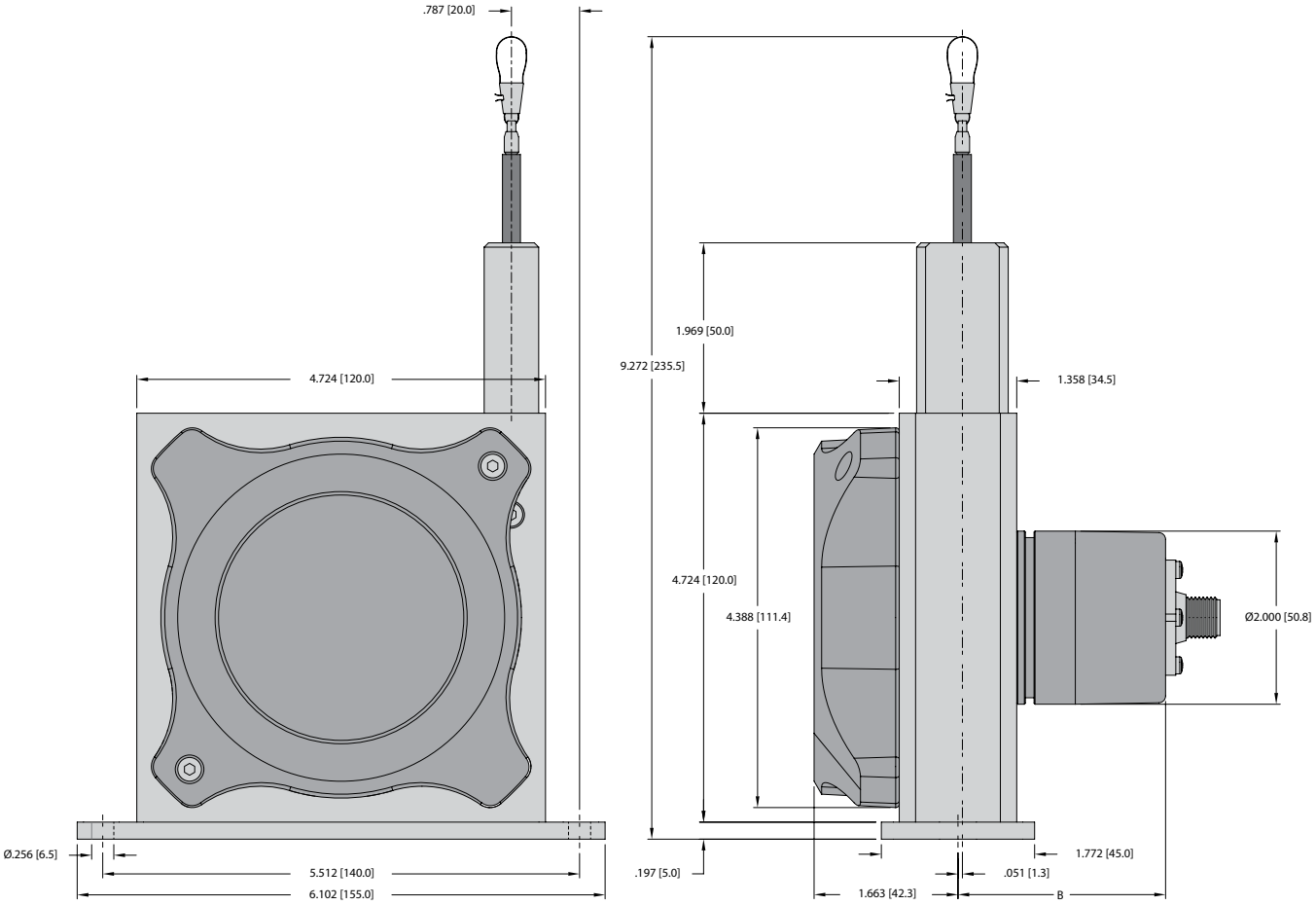

Dimension B depends on the encoder used

Encoder	Draw wire assembly	**B** in. [mm]
Incremental (RI-10)	DW****-155-10-******-*****	2.14 [54.25]
Absolute (RM-28)	DW****-155-28-******-*****	2.63 [66.75]
Absolute (RM-29)	DW****-155-29-******-*****	2.65 [67.35]
Absolute (RM-103)	DW****-155-103-******-*****	2.63 [66.75]
Absolute (RM-105) [CANopen]	DW****-155-105-******-*****	3.47 [88.25]
Absolute (RM-105) [Ethernet/IP]	DW****-155-105-******-*****	3.02 [76.75]
Absolute (RM-116)	DW****-155-116-******-*****	2.64 [67.05]
Absolute (RM-118)	DW****-155-118-******-*****	2.64 [67.05]
Absolute (RM-121)	DW****-155-121-******-*****	2.64 [67.05]

We reserve the right to make technical alterations without prior notice.

Draw Wire Encoder DW155

Dimensions: DW155 with Encoder and Interchangeable Installation [N85]

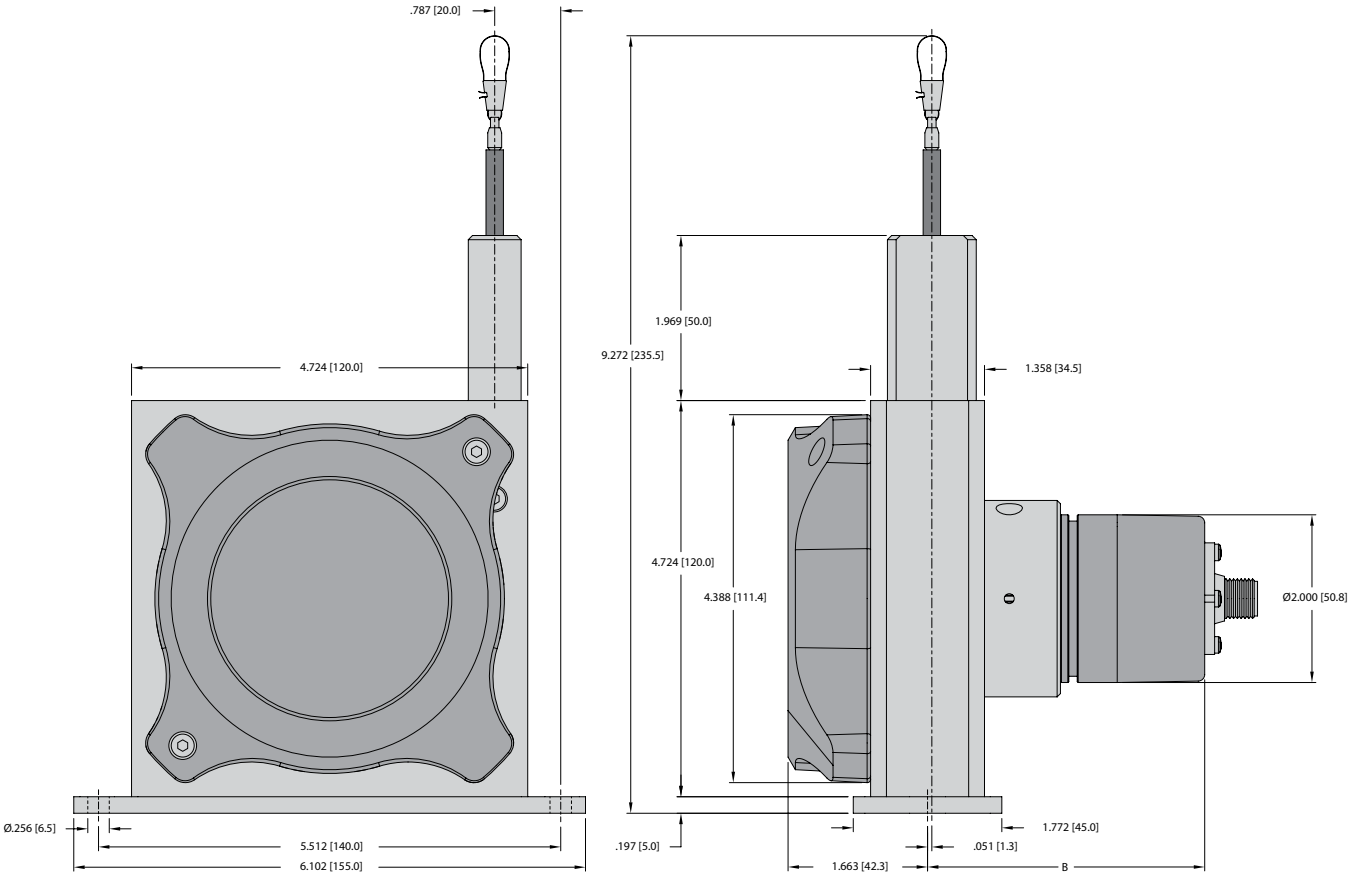

Dimension B depends on the encoder used

Encoder	Draw wire assembly	**B** in. [mm]
Incremental (RI-10)	DW****-155-10-******-*****/N85	3.04 [77.25]
Absolute (RM-28)	DW****-155-28-******-*****/N85	3.53 [89.75]
Absolute (RM-29)	DW****-155-29-******-*****/N85	3.55 [90.17]
Absolute (RM-103)	DW****-155-103-******-*****/N85	3.53 [89.75]
Absolute (RM-105) [CANopen]	DW****-155-105-******-*****/N85	4.38 [111.25]
Absolute (RM-105) [Ethernet/IP]	DW****-155-105-******-*****/N85	3.92 [99.56]
Absolute (RM-116)	DW****-155-116-******-*****/N85	3.54 [90.05]
Absolute (RM-118)	DW****-155-118-******-*****/N85	3.54 [90.05]
Absolute (RM-121)	DW****-155-121-******-*****/N85	3.54 [90.05]

We reserve the right to make technical alterations without prior notice.

Draw Wire Encoder DW155

Dimensions: DW155 with Analog Sensor

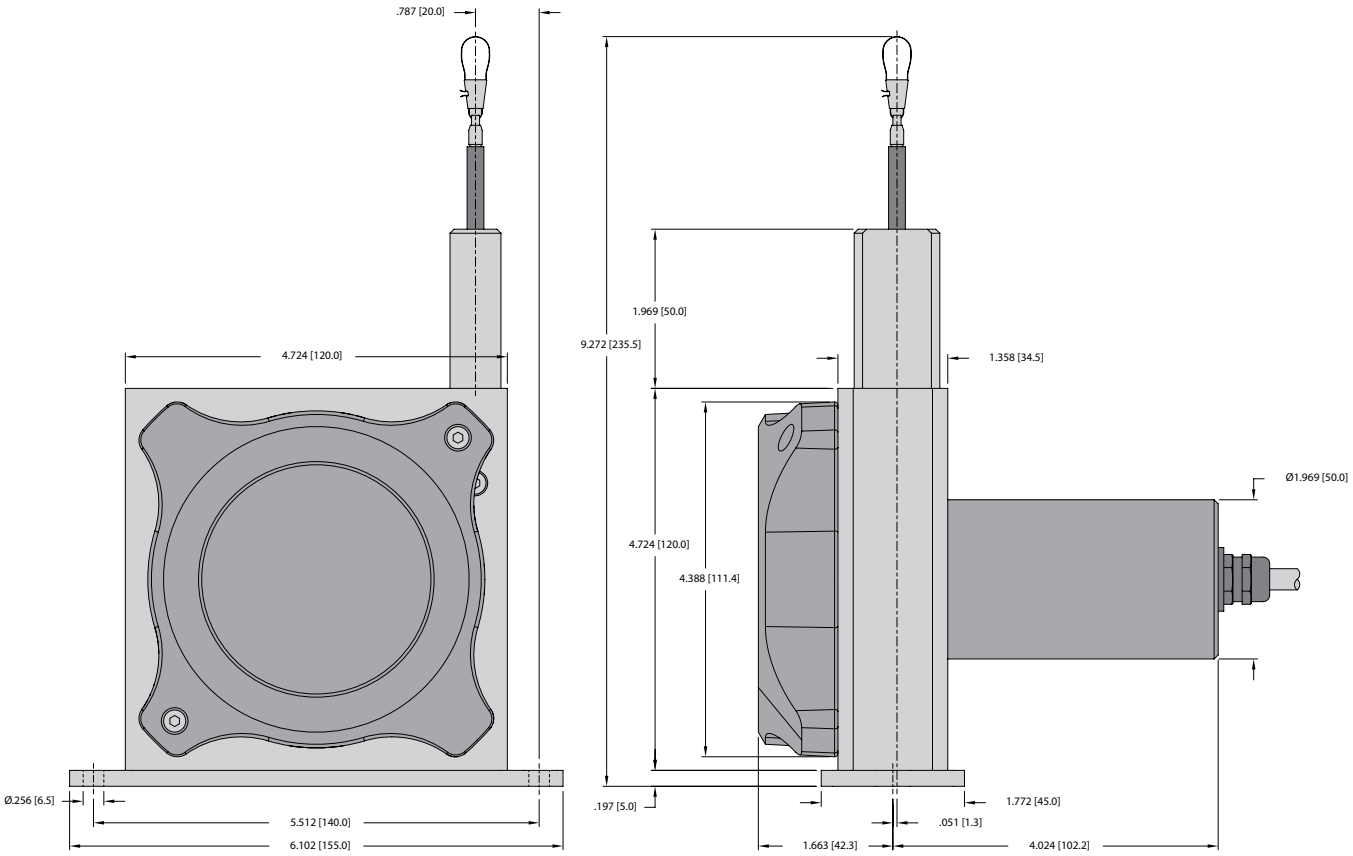

We reserve the right to make technical alterations without prior notice.

Accessories:

- See page H1, Connectivity, for cables and connectors

Draw Wire Encoder DW135

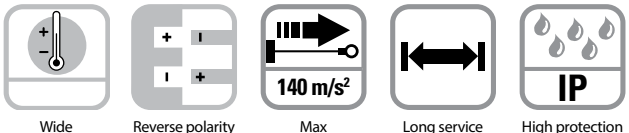

Wide temperature range | Reverse polarity protection | Max acceleration | Long service life | High protection level

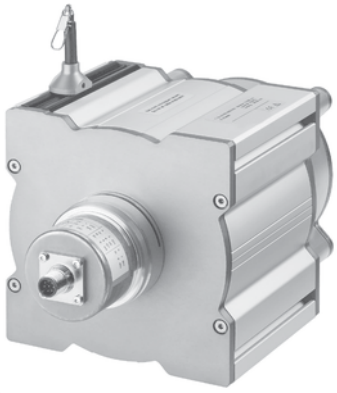

RoHS compliant · SSI · PROFIBUS · PROFINET · EtherCAT Conformance tested · Analog output · CANopen · SAE J1939 · EtherNet/IP

Robust

- **Corrosion resistant:** Titanium-anodized aluminium housing.
- **High-strength stainless steel draw wire.**
- **Low friction design or wire exit free from wear:** Diamond-polished ceramic guide.
- **Wide temperature range.**

Dynamic

- **High traverse speed.**
- **High acceleration:** Dynamic spring traction by means of a constant force spring.

Versatile

- **Suitable for various sensors/encoders:** Absolute, fieldbus, incremental and analog.
- **Quick mounting:** Fastening by means of mounting feet.
- **Flexible connection options:** Cable, connector, radial, axial.
- **Linearity up to 0.05%.**

Mechanical Characteristics (Draw Wire Mechanics):

Measuring range:		8,000 mm	10,000-15,000 mm	20,000 mm	25,000-30,000 mm	35,000-42,500 mm
Extension force:	Fmin	1.62 lbs (7.2 N)	1.96 lbs (8.7 N)	1.57 lbs (7.0 N)	1.64 lbs (7.3 N)	1.57 lbs (7.0 N)
	Fmax	3.60 lbs (16.0 N)	3.80 lbs (16.9 N)	2.79 lbs (12.4 N)	3.53 lbs (15.7 N)	3.17 lbs (14.1 N)
Max. speed:		32.8 ft/s (10 m/s)	19.7 ft/s (6 m/s)	16.4 ft/s (5 m/s)	16.4 ft/s (5 m/s)	16.4 ft/s (5 m/s)
Max. acceleration:		459.3 ft/s² (140 m/s²)	262.5 ft/s² (80 m/s²)	196.8 ft/s² (60 m/s²)	196.8 ft/s² (60 m/s²)	196.8 ft/s² (60 m/s²)
Linearity:		analog output: ±0.1% (of the measuring range) encoder: ±0.05% (of the measuring range)				
Weight:		approx. 1.65 lbs (750 g) (depending on the sensor/ encoder used)				
Materials:		housing: titanium-anodized aluminium wire: stainless steel Ø 0.5 mm				
Protection (encoder only):		IP65				

Operating Principle:

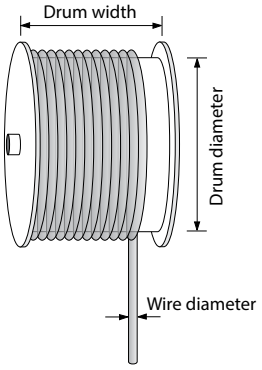

Construction:
The core of a draw wire device is a drum mounted on bearings, onto which a wire is wound. Winding takes place via a spring-loaded device.

Note:
Exceeding the maximum extension length of the draw wire will lead to damage to the wire and the mechanics.

We reserve the right to make technical alterations without prior notice.

Turck Inc. | 3000 Campus Drive, Minneapolis, MN 55441 | T +1 800 544 7769 | F +1 763 553 0708 | www.turck.com

Draw Wire Encoder DW135

Electrical Characteristics (Analog Output, Scaled to Measuring Range):

Analog output [Key Code]:	0-10 V [8C]	4-20 mA [7E]	Potentiometer [PA]
Output:	0-10 V galvanically isolated, 4 conductors	4-20 mA, 2 conductors	1 kOhm
Supply voltage:	12-30 VDC	12-30 VDC	max. 30 VDC
Recommended slider current:	-	-	< 1 µA
Max. current consumption:	22.5 mA (no load)	50 mA	-
Reverse polarity protection:	yes	yes	-
Operating temperature:	-4 to +185 °F (-20 to +85 °C)	-4 to +185 °F (-20 to +85 °C)	-4 to +185 °F (-20 to +85 °C)
Connection diagrams:	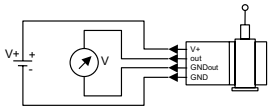	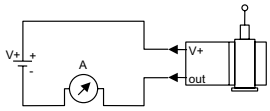	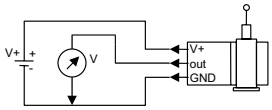

ROHS compliant according to EU guideline 2011/65/EU

We reserve the right to make technical alterations without prior notice.

Part Number Key: DW135 with Encoder

A	B		C		D		E	F		G		H
DW	8000	-	135	-	10	-	2B	2000	-	H1181	/	Specials

A	Type
DW	Draw Wire

B	Measuring Range
8000	8000 mm Steel Wire
10000	10000 mm Steel Wire
12000	12000 mm Steel Wire
15000	15000 mm Steel Wire
20000	20000 mm Steel Wire
25000	25000 mm Steel Wire
30000	30000 mm Steel Wire
35000	35000 mm Steel Wire
40000	40000 mm Steel Wire
42500	42500 mm Steel Wire

C	Housing
135	135 mm

D	Encoder Type
10	RI-10, Incremental
28	RM-28, Absolute, SSI
29	RM-29, Absolute, CANopen, EtherCAT, PROFIBUS-DP, PROFINET IO
103	RM-103, Absolute, SSI
105	RM-105, Absolute, CANopen, Ethernet/IP, Modbus
118	RM-118, Absolute, SSI
121	RM-121, Absolute, CANopen, SAE J1939

E	Voltage Supply and Output Type
Dependent on Encoder Selected [1]	

F	Pulse Rate/Resolution
Dependent on Encoder Selected [1]	

G	Type of Connection
Dependent on Encoder Selected [1]	

H	Specials
Dependent on Encoder Selected [1]	

[1] Recommended encoders listed below

Draw Wire Encoder DW135

Standard resolutions for draw wire with incremental encoder RI-10

Drum circumference (mm)	333.33	333.33	333.33
Encoder PPR	1000	2000	4000
Pulses/mm	3	6	12
Resolution (mm)	0.33	0.17	0.08

Standard resolutions for draw wire with absolute encoder RM-118 or RM-121 (12-bit ST, programmable via bus)

Drum circumference (mm)	333.33
Pulses/revolution (ppr)	4096
Pulses/mm	12.3
Resolution (mm)	0.08

Recommended standard variants (with incremental, absolute encoder)

Draw wire assembly	Mounted encoder	Interface	Power supply	Type of connection	Resolution / Protocol	Option
DWxxxx-135-10-2B2000-H1181	RI-10T10C-2B2000-H1181	Push-pull with inverted signal	10-30 VDC	Radial M12 connector	2000 ppr	-
DWxxxx-135-118-3C12S12M-H1181	RM-118T10C-3C12S12M-H1181	SSI	10-30 VDC	Radial M12 connector	4096 ppr / SSI-Gray-Code	-
DWxxxx-135-121-9D38B-H1151	RM-121T10C-9D38B-H1151	CANopen	10-30 VDC	Radial M12 connector	CANopen encoder profile DS406 V4.0	-

Other variants (with absolute encoder)

Draw wire assembly	Mounted encoder	Interface	Power supply	Type of connection	Resolution / Protocol	Option
DWxxxx-135-103-3C12S12M-H1181	RM-103T10C-3C12S12M-H1181	SSI	10-30 VDC	1 x radial M12 connector	4096 ppr / SSI-Gray-Code	SET button + status LED
DWxxxx-135-28-3C24B-H1181	RM-28T10C-3C24B-H1181	SSI	10-30 VDC	1 x radial M12 connector	4096 ppr / SSI-Gray-Code	SET button + status LED
DWxxxx-135-105-9D38B-H1151/N46	RM-105T10C-9D38B-B1M12/N46	CANopen	10-30 VDC	1 x radial M12 connector	CANopen encoder profile DS406 V3.2	SET button
DWxxxx-135-29-9D28B-R2M12/N46	RM-29T10C-9D28B-R2M12/N46	CANopen	10-30 VDC	2 x radial M12 connector	CANopen encoder profile DS406 V3.2	SET button
DWxxxx-135-121-9F43B-H1151	RM-121T10C-9F43B-H1151	SAE J1939	10-30 VDC	1 x radial M12 connector	CAN high-speed acc. to ISO 11898, CAN specification 2.0 B	-
DWxxxx-135-29-9A28B-R3M12/N46	RM-29T10C-9A28B-R3M12/N46	PROFIBUS	10-30 VDC	3 x radial M12 connector	Profibus-DP V0 encoder profile Class 2	SET button
DWxxxx-135-29-9C28B-R3M12	RM-29T10C-9C28B-R3M12	EtherCAT	10-30 VDC	3 x radial M12 connector	EtherCAT with CoE 3.2.10	-
DWxxxx-135-29-9E28B-R3M12	RM-29T10C-9E28B-R3M12	PROFINET IO	10-30 VDC	3 x radial M12 connector	PROFINET encoder profile version 4.1	-
DWxxxx-135-105-9N32B-B3M12	RM-105T10C-9N32B-B3M12	EtherNet/IP	10-30 VDC	3 x axial M12 connector	EtherNet/IP	-

We reserve the right to make technical alterations without prior notice.

Draw Wire Encoder DW135

Part Number Key: DW135 with Encoder (analog, scalable with limit switch function)

A	B		C		D		E	F		G		H
DW	8000	-	135	-	116	-	7A	SALNS	-	H1151	/	Specials

A	Type
DW	Draw Wire

B	Measuring Range
8000	8000 mm Steel Wire
10000	10000 mm Steel Wire
12000	12000 mm Steel Wire
15000	15000 mm Steel Wire
20000	20000 mm Steel Wire
25000	25000 mm Steel Wire
30000	30000 mm Steel Wire
35000	35000 mm Steel Wire
40000	40000 mm Steel Wire
42500	42500 mm Steel Wire

C	Housing
135	135 mm

D	Encoder Type
116	RM-116, Absolute

E	Voltage Supply and Output Type
Dependent on Encoder Selected [1)]	

F	Type of Connection
Dependent on Encoder Selected [1)]	

G	Pulse Rate/Resolution
Dependent on Encoder Selected [1)]	

[1)]Recommended encoders listed below

Recommended standard variants (with analog encoder, scalable with limit switch function)

Draw wire assembly	Mounted encoder	Interface	Power supply	Type of connection	Resolution / Protocol	Option
DWxxxx-135-116-7ASALNS-H1151	RM-116T10C-7ASALNS-H1151	Analog, 4-20 mA	10-30 VDC	Radial M12 connector	12 Bit / 4-20 mA	scalable without limit switch function
DWxxxx-135-116-8BSALNS-H1151	RM-116T10C-8BSALNS-H1151	Analog, 0-10 V	15-30 VDC	Radial M12 connector	12 Bit / 0-10 V	scalable without limit switch function
DWxxxx-135-116-7ASALWL-H1151	RM-116T10C-7ASALWL-H1151	Analog, 4-20 mA	10-30 VDC	Radial M12 connector	12 Bit / 4-20 mA	scalable with limit switch function
DWxxxx-135-116-8BSALWL-H1151	RM-116T10C-8BSALWL-H1151	Analog, 0-10 V	15-30 VDC	Radial M12 connector	12 Bit / 0-10 V	scalable with limit switch function

We reserve the right to make technical alterations without prior notice.

Draw Wire Encoder DW135

Part Number Key: DW135 with Analog Sensor (scaled to measuring range)

A	B		C		D		E
DW	8000	-	135	-	7E	-	H1441

A	Type
DW	Draw Wire

B	Measuring Range
8000	8000 mm Steel Wire
10000	10000 mm Steel Wire
12000	12000 mm Steel Wire
15000	15000 mm Steel Wire
20000	20000 mm Steel Wire
25000	25000 mm Steel Wire
30000	30000 mm Steel Wire
35000	35000 mm Steel Wire
40000	40000 mm Steel Wire
42500	42500 mm Steel Wire

C	Housing
135	135 mm

D	Voltage Supply and Output Type
7E	12-30 VDC, 4-20 mA
8C	12-30 VDC, 0-10 V
PA	30 VDC max, 1 kΩ, Potentiometer

E	Type of Connection
H1441	Axial 4-pin M12 Eurofast Connector
CA	Axial Cable (2m PVC)

Standard Wiring (analog sensor):

Pin	Color	0-10 V	4-20 mA	1 kOhm
1	BN	V+	V+	V+
2	WH	Signal	N/C	Slider
3	BU	GND	Signal	GND
4	BK	GND Sig.	N/C	N/C

Wiring Diagram:

Male Encoder View

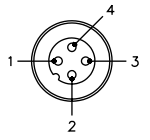

Mating Cordset:
RK 4.4T-*/S618

* Length in meters.

We reserve the right to make technical alterations without prior notice.

Draw Wire Encoder DW135

Dimensions: D135 with Encoder, Measuring Range 8,000 mm

With encoder

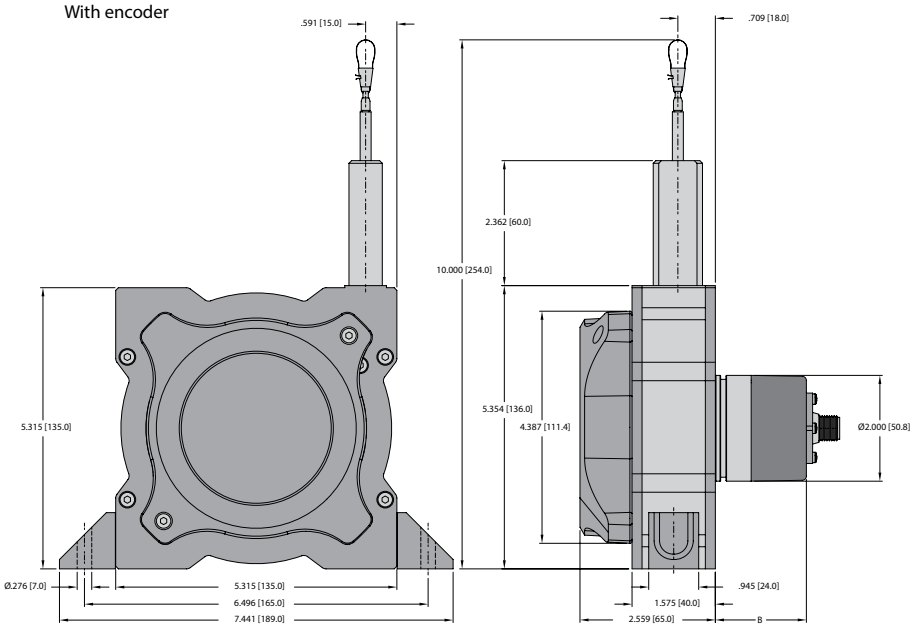

With analog output

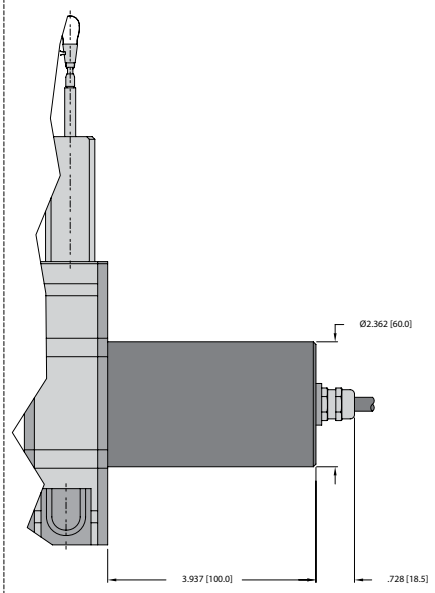

Dimension B depends on the encoder used

Encoder	Draw wire assembly	**B** in. [mm]
Incremental (RI-10)	DW*****-135-10-******-*****	1.46 [37.0]
Absolute (RM-28)	DW*****-135-28-******-*****	1.95 [49.5]
Absolute (RM-29)	DW*****-135-29-******-*****	3.04 [77.2]
Absolute (RM-103)	DW*****-135-103-******-*****	1.95 [49.5]
Absolute (RM-105) [CANopen]	DW*****-135-105-******-*****	2.76 [70.0]
Absolute (RM-105) [EtherNet/IP]	DW*****-135-105-******-*****	2.34 [59.5]
Absolute (RM-116)	DW*****-135-116-******-*****	1.96 [49.8]
Absolute (RM-118)	DW*****-135-118-******-*****	1.96 [49.8]
Absolute (RM-121)	DW*****-135-121-******-*****	1.96 [49.8]

Dimensions: DW135 with Encoder, Measuring Range 10,000 - 12,000 mm

With encoder

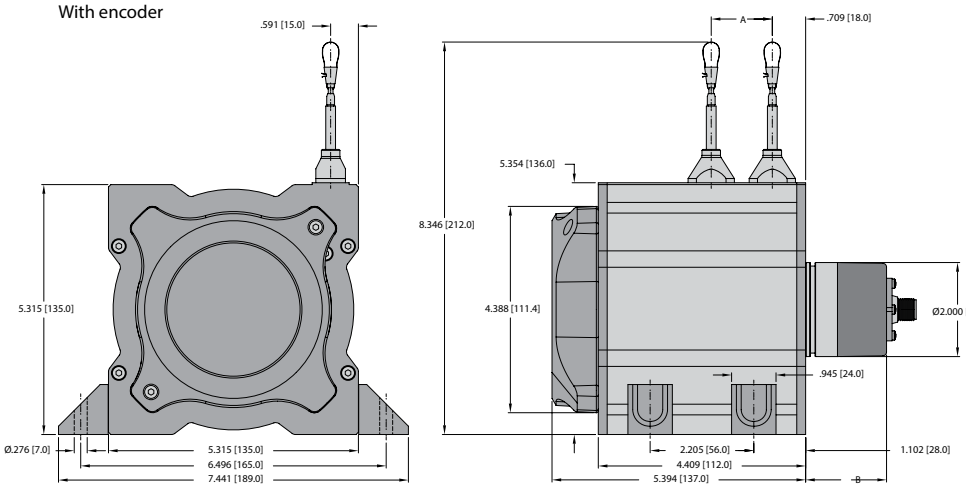

With analog output

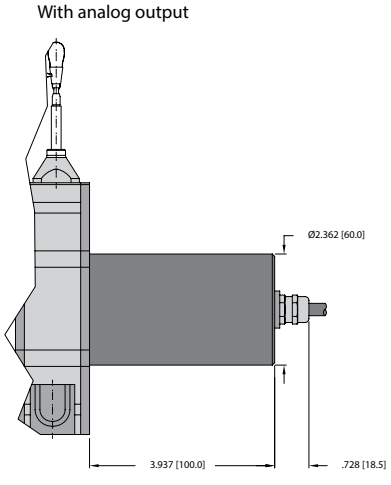

We reserve the right to make technical alterations without prior notice.

Draw Wire Encoder DW135

Dimensions: DW135 with Encoder, Measuring Range 15,000 - 20,000 mm

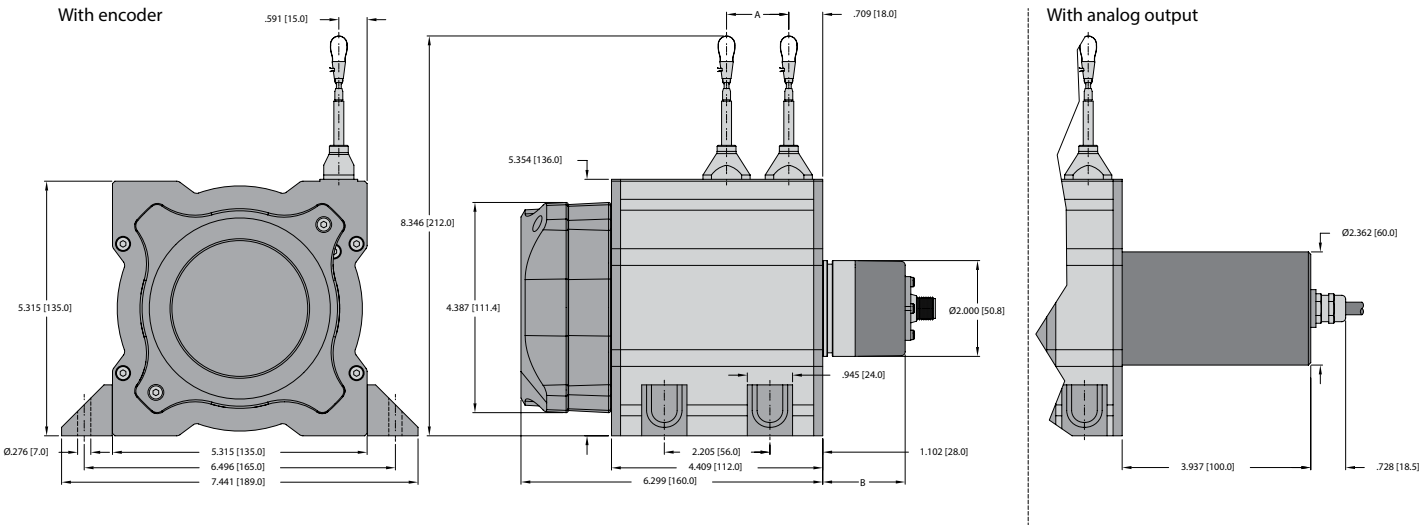

Measuring range	**A** - Wire rolled up	Wire pulled out
10000 mm	1.30 [33]	0.71 [18]
12000 mm	1.42 [36]	0.71 [18]
15000 mm	1.61 [41]	0.71 [18]
20000 mm	1.89 [48]	0.71 [18]

Dimension B depends on the encoder used

Encoder	**Draw wire assembly**	**B** in. [mm]
Incremental (RI-10)	DW*****-135-10-******-*****	2.36 [60.0]
Absolute (RM-28)	DW*****-135-28-******-*****	2.85 [72.5]
Absolute (RM-29)	DW*****-135-29-******-*****	2.85 [72.5]
Absolute (RM-103)	DW*****-135-103-******-*****	3.94 [100.2]
Absolute (RM-105) [CANopen]	DW*****-135-105-******-*****	3.66 [93.0]
Absolute (RM-105) [EtherNet/IP]	DW*****-135-105-******-*****	3.25 [82.5]
Absolute (RM-116)	DW*****-135-116-******-*****	2.87 [72.8]
Absolute (RM-118)	DW*****-135-118-******-*****	2.87 [72.8]
Absolute (RM-121)	DW*****-135-121-******-*****	2.87 [72.8]

Dimensions: DW135 with Encoder, Measuring Range 25,000 - 30,000 mm

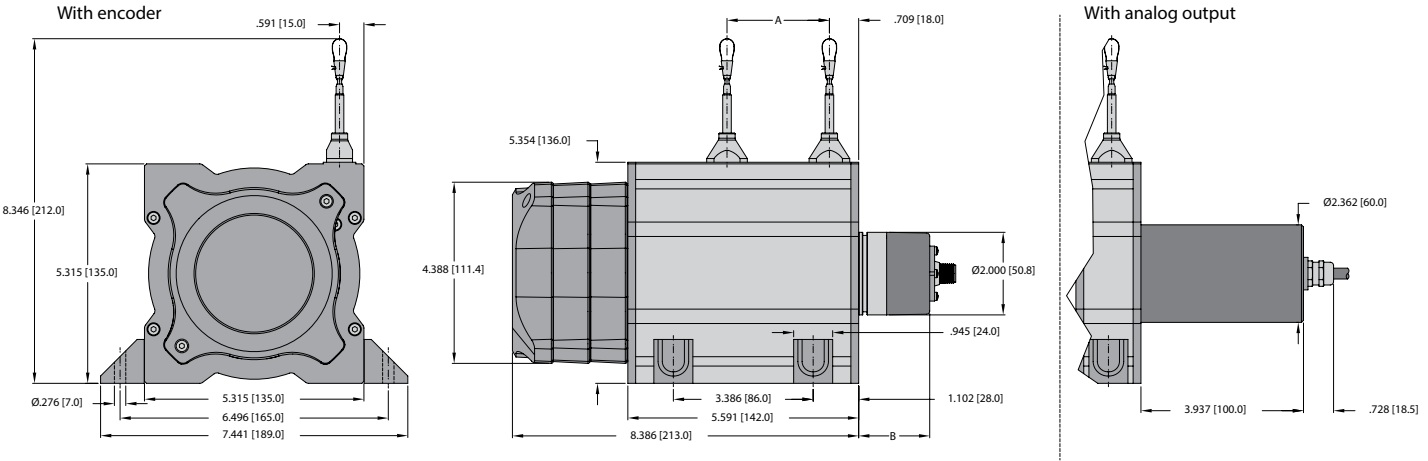

We reserve the right to make technical alterations without prior notice.

Draw Wire Encoder DW135

Dimensions: DW135 with Encoder, Measuring Range 35,000 - 42,500 mm

With encoder

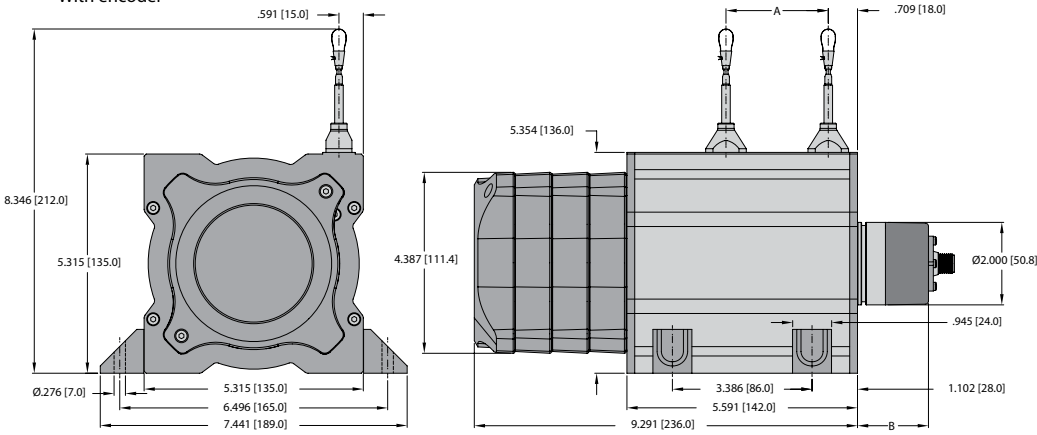

With analog output

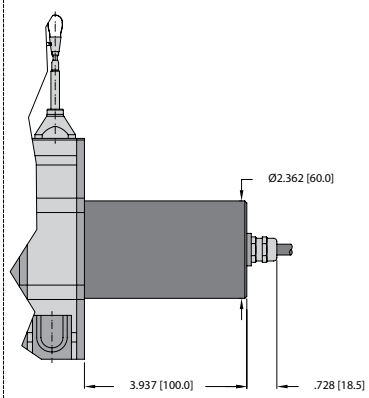

Measuring range	**A** - Wire rolled up	Wire pulled out
25000 mm	2.02 [56]	0.71 [18]
30000 mm	2.48 [63]	0.71 [18]
35000 mm	2.80 [71]	0.71 [18]
40000 mm	3.07 [78]	0.71 [18]
42500 mm	3.23 [82]	0.71 [18]

Dimension B depends on the encoder used

Encoder	Draw wire assembly	**B** in. [mm]
Incremental (RI-10)	DW*****-135-10-******-*****	2.36 [60.0]
Absolute (RM-28)	DW*****-135-28-******-*****	2.85 [72.5]
Absolute (RM-29)	DW*****-135-29-******-*****	2.85 [72.5]
Absolute (RM-103)	DW*****-135-103-******-*****	3.94 [100.2]
Absolute (RM-105) [CANopen]	DW*****-135-105-******-*****	3.66 [93.0]
Absolute (RM-105) [EtherNet/IP]	DW*****-135-105-******-*****	3.25 [82.5]
Absolute (RM-116)	DW*****-135-116-******-*****	2.87 [72.8]
Absolute (RM-118)	DW*****-135-118-******-*****	2.87 [72.8]
Absolute (RM-121)	DW*****-135-121-******-*****	2.87 [72.8]

Accessories:

- See page H1, Connectivity, for cables and connectors

We reserve the right to make technical alterations without prior notice.

Draw Wire Encoder DW60



Long service life | Wide temperature range | High protection level | Redundancy | V4A

Robust

- **Protection level up to IP69K and wide temperature range from -40 to +85 °C.**
- **The titanium-anodized aluminum housing and the stainless steel wires allow using the mechanics even in harsh conditions.**
- **Wire diameter (stainless steel, V4A) up to Ø1 mm - ideal for outdoor applications.**



RoHS compliant | Analog output | CANopen

Versatile

- **Measuring length up to 4 m.**
- **The right measuring wire and the right wire fastening for every application.**
- **Various constructions: open, closed housing or housing with perforated sheet steel cover.**

Advantage

- **Redundant outputs (mA, V, R, CANopen).**
- **Linearity up to ±0.1% of the measuring range.**

Technical Data (Draw Wire Mechanics):

Linearity:	±0.5%, ±1% (See Linearity Table below)
Improved linearity:	±0.25% or ±0.1%
Resolution:	see electrical characteristics
Sensor element:	potentiometer
Output signal:	4 - 20 mA, 0 - 10 V, potentiometer, CANopen
Redundant output signal:	optional for: 4 - 20 mA, 0 - 10 V, potentiometer, CANopen
Connection:	axial M12 connector or axial cable outlet (TPE cable), standard length 2 m
Protection:	IP67, optional IP69K (only with cable outlet)
Humidity:	max. 90 % relative, no condensing
Max. speed:	9.84 ft/s [3.0 m/s]
Acceleration:	164.04 ft/s² [50.0 m/s²]
Weight:	up to approx. 0.92 lbs [420 g] depending on the measuring range
Housing:	aluminum, spring housing PA6
Spring force:	0.89 - 1.34 lbs [4 - 6 N] depending on the measuring range

Measuring Wire Characteristics:

V4A, Ø0.5 mm:		
	no.	1.4401
	Breaking force	29.23 lbs (130 N)
	TK	16 x 10^{-6} K^{-1}
V4A, Ø0.7 mm:		
	no.	1.4401
	Breaking force	48.56 lbs (216 N)
	TK	16 x 10^{-6} K^{-1}
V4A, Ø1.0 mm:		
	no.	1.4401
	Breaking force	107.5 lbs (478 N)
	TK	16 x 10^{-6} K^{-1}

Operating Principle:

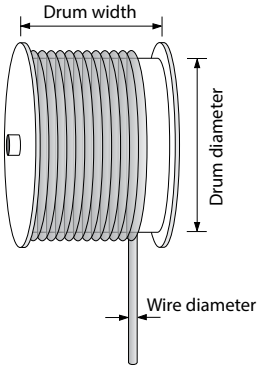

Construction:
The core of a draw wire device is a drum mounted on bearings, onto which a wire is wound. Winding takes place via a spring-loaded device.

Note:
Exceeding the maximum extension length of the draw wire will lead to damage to the wire and the mechanics.

We reserve the right to make technical alterations without prior notice.

Draw Wire Encoder DW60

Electrical Characteristics (Analog Output):

Output circuit [Key Code]:	4-20 mA [7A/27A]	0-10 V [8C/28C]	1 kΩ, potentiometer [PA/2PA]
Output current:	max. 50 mA in case of a failure	max. 10 mA, min. load 10 kΩ	–
Max. current consumption:	–	22.5 mA (non load)	–
Power supply:	12 - 30 VDC	12 - 30 VDC	max. 30 VDC
Response time:	< 1 ms from 0 ... 100% and 100 ... 0%	< 3 ms from 0 ... 100% and 100 ... 0%	–
Resolution:	limited by the noise	limited by the noise	theoretically unlimited
Noise:	0.03 mA_{pp} = 6 mV_{pp} at 200 Ω	typ. 3 mV_{pp}, max. 37 mV_{pp}	depending on the supply voltage
Recommended slider current:	–	–	< 1 µA
Reverse polarity protection:	yes	yes	–
Working temperature:			
standard	-4 to +185 °F (-20 to +85 °C)	-4 to +185 °F (-20 to +85 °C)	-4 to +185 °F (-20 to +85 °C)
special option	-40 to +185 °F (-40 to +85 °C)	-40 to +185 °F (-40 to +85 °C)	-40 to +185 °F (-40 to +85 °C)
Short circuit protection:	-	yes, sustained short-circuit protected	
Temperature coefficient:	0.0079 %/K	0.0037 %/K	±0.0025 %/K
Connection diagrams:	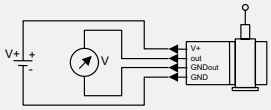	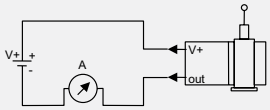	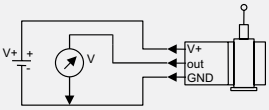

Electromagnetic compatibility acc. to EN 61326-1:2013

ROHS compliant acc. to EU guideline 2011/65/EU

Interface Characteristics CANopen:

CAN specification:	Full CAN 2.0B (ISO11898)
Communication profile:	CANopen CiA 301 V4.2.0, Slave
Device profile:	Encoder, absolute linear, CiA 406 V3.2.0
Error monitoring:	Producer Heartbeat, Emergency Message, Node Guarding
Node ID:	Default: 7, adjustable via SDO
PDO:	1x TPDO, static mapping
PDO functions:	Event-triggered, time-triggered, Sync-cyclic, Sync-acyclic
Transmission rate:	Default: 250 kbit/s, 1Mbps, 800, 500, 250, 125, 50, 20 kbps adjustable via SDO
Bus connection:	M12 connection, 5-pin
Integrated bus terminating resistor:	120 ohms ready-to-activate via SDO
Bus, galvanic isolation:	no
Power supply:	8-30 VDC
Working temperature:	-4 to +185 °F (-20 to +85 °C) optional: -40 to +185 °F (-40 to +85 °C)
Current consumption:	typ. 10 mA at 24 V, 20 mA at 12 V
Measuring rate:	1kHz with 16 bit resolution
Repeat accuracy:	±0.5%, ±0.25% or ±0.1% (according to the selected linearity)
Resolution:	0.002% of the measuring range
Reverse polarity protection:	yes
Electromagnetic compatibility:	acc. to EN 61326-1:2013

RoHS compliant acc. to EU guideline 2011/65/EU

Standard Linearity:

Measuring Length	[m] Key Code	1.0 1000			1.5 1500			2.0 2000			2.5 2500			3.0 3000			3.5 3500		4.0 4000	
Wire Type	Ø [mm] Key Code	0.5	0.7	1.0	0.5	0.7	1.0	0.5	0.7	1.0	0.5	0.7	1.0	0.5	0.7	1.0	0.5	0.7	0.5	0.7
		A	B	C	A	B	C	A	B	C	A	B	C	A	B	C	A	B	A	B
Standard Linearity	Key Code A	±0.5%			±0.5%			±0.5%		±1.0%	±0.5%		±1.0%	±0.5%		±1.0%	±0.5%	±1.0%	±0.5%	±1.0%
Improved Linearity ±0.25%	Key Code B	Y	Y	Y	Y	Y	Y	Y	Y	–	Y	–	–	Y	–	–	–	–	–	–
Improved Linearity ±0.1%	Key Code C	Y	Y	Y	Y	Y	Y	Y	Y	–	Y	–	–	Y	–	–	–	–	–	–

Y = Feasible – = not feasible

Accessories:

- See page H1, Connectivity, for cables and connectors

We reserve the right to make technical alterations without prior notice.

Draw Wire Encoder DW60

Standard Wiring (Analog Output):

Signal Type	H1441 Pin:	1	2	3	4	PH
4-20mA [7A]	Connection Type	+V	N/C	Signal	N/C	⏚
0-10V [8C]	Connection Type	+V	Signal	Common (0V)	Signal 0V	⏚
1kΩ pot.[PA]	Connection Type	+V	Slider	Common (0V)	N/C	⏚

Standard Wiring (CANopen Output):

Signal Type	H1451 Pin:	3	2	1	4	5
CANopen	Connection Type	Common (0V)	+V	CAN GND	CAN High	CAN Low

Standard Wiring (2x Analog Output):

Signal Type	H1481 Pin:	1	2	3	4	5	6	7	8	PH
2x 4-20mA [27A]	Connection Type	+V1	N/C	Signal1	N/C	+V2	N/C	Signal2	N/C	⏚
2x 0-10V [28C]	Connection Type	+V1	Signal1	Common1 (0V)	Signal 0V1	+V2	Signal2	Common2 (0V)	Signal 0V2	⏚
2x 1kΩ pot.[2PA]	Connection Type	+V1	Slider1	Common1 (0V)	N/C	+V2	Slider2	Common2 (0V)	N/C	⏚

Standard Wiring (Analog Output):

Signal Type	Cable Color:	BN	WH	BU	BK	Shield
4-20mA [7A]	Connection Type	+V	N/C	Signal	N/C	⏚
0-10V [8C]	Connection Type	+V	Signal	Common (0V)	Signal 0V	⏚
1kΩ pot.[PA]	Connection Type	+V	Slider	Common (0V)	N/C	⏚

Standard Wiring (CANopen Output):

Signal Type	Cable Color:	WH	BN	GY	GN	YE
CANopen	Connection Type	Common (0V)	+V	CAN GND	CAN High	CAN Low

Standard Wiring (2x Analog Output):

Signal Type	Cable Color:	WH	BN	GN	YE	GY	PK	BU	RD	Shield
2x 4-20mA [27A]	Connection Type	+V1	N/C	Signal1	N/C	+V2	N/C	Signal2	N/C	⏚
2x 0-10V [28C]	Connection Type	+V1	Signal1	Common1 (0V)	Signal 0V1	+V2	Signal2	Common2 (0V)	Signal 0V2	⏚
2x 1kΩ pot.[2PA]	Connection Type	+V1	Slider1	Common1 (0V)	N/C	+V2	Slider2	Common2 (0V)	N/C	⏚

Wiring Diagram:

Male Encoder View	Male Encoder View	Male Encoder View
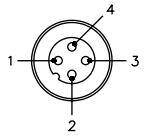	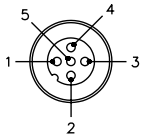	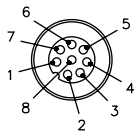
Mating Cordset: **RK 4.4T-*/S618**	Mating Cordset: **RKC 572-*M/S3117**	Mating Cordset: **RKC 8T-*/S618**

* Length in meters.

Accessories:

- See page H1, Connectivity, for cables and connectors

We reserve the right to make technical alterations without prior notice.

Draw Wire Encoder DW60

Part Number Key: DW60 with Encoder

A	B		C		D1	D2	D3		E		F		G/H
DW	1000	-	60	-	A	A	A	-	7A	-	H1441	/	Specials

A	Type
DW	Draw Wire

B	Measuring Range
1000	1000 mm Steel Wire
1500	1500 mm Steel Wire
2000	2000 mm Steel Wire
2500	2500 mm Steel Wire
3000	3000 mm Steel Wire
3500	3500 mm Steel Wire
4000	4000 mm Steel Wire

C	Housing
60	60 mm

D1	Wire Type
A	V4A, Ø 0.5 mm
B	V4A, Ø 0.7 mm
C	V4A, Ø 1.0 mm

D2	Linearity
A	0.5% to 1.0% (standard linearity)
B	0.25%
C	0.1%

D3	Housing
A	Open housing
B	Housing with perforated sheet metal cover
C	Closed housing

E	Voltage Supply and Output Type
7A	12-30 VDC, 4-20mA
27A	12-30 VDC, 2x 4-20mA
8C	12-30 VDC, 0-10 V
28C	12-30 VDC, 2x 0-10 V
PA	30 VDC max, 1 kΩ Potentometer
2PA	30 VDC max, 2x kΩ Potentometer
9D16B	8-30 VDC, CANopen, 16 bit
29D16B	8-30 VDC, 2x CANopen, 16 bit

F	Type of Connection
H1441	Axial 4-pin M12 Eurofast [1]
H1451	Axial 5-pin M12 Eurofast [2]
H1481	Axial 8-pin M12 Eurofast [3]
CA	Axial Cable (2 m TPE)

[1] Only with output type '7A, 8C, PA'
[2] Only with output type '9D16B, 29D16B'
[3] Only with output type '27A, 28C, 2PA'

G	Special Temperature Rating
(Blank)	-4 to +185 °F (-20 to +85 °C)
N20	-40 to +185 °F (-40 to +85 °C)

H	Special Wire Fastener
(Blank)	Snap Ring, Ø 17 mm
N74	Eyelet, Ø 20 mm
N75	M4 Thread

Housing types (the suitable housing type for every application)

Open housing [A]



Housing with perforated sheet metal cover [B]



Closed housing [C]



We reserve the right to make technical alterations without prior notice.

Draw Wire Encoder DW60

Dimensions: DW60 with Open Housing

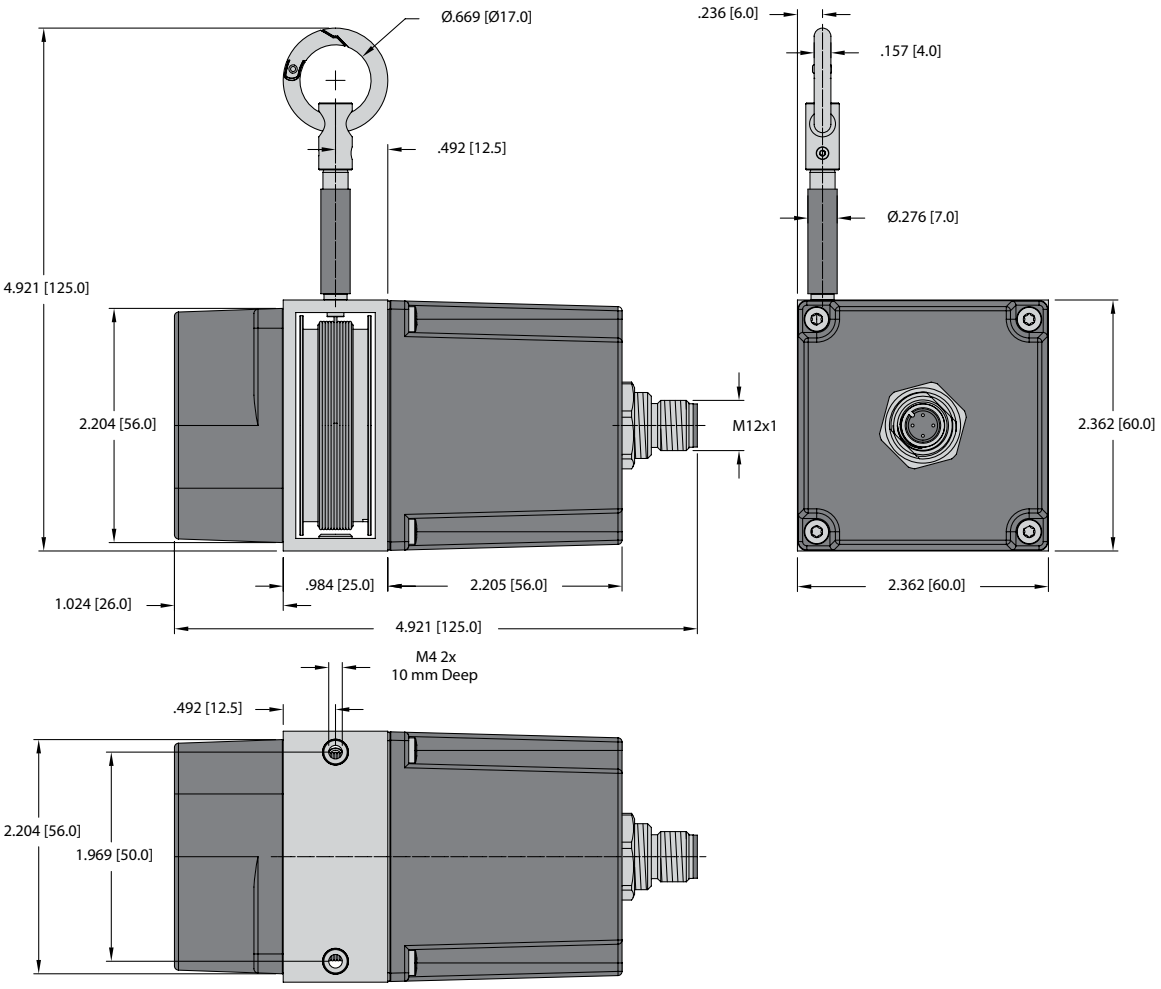

We reserve the right to make technical alterations without prior notice.

Draw Wire Encoder DW60

Dimensions: DW60 with Perforated Cover

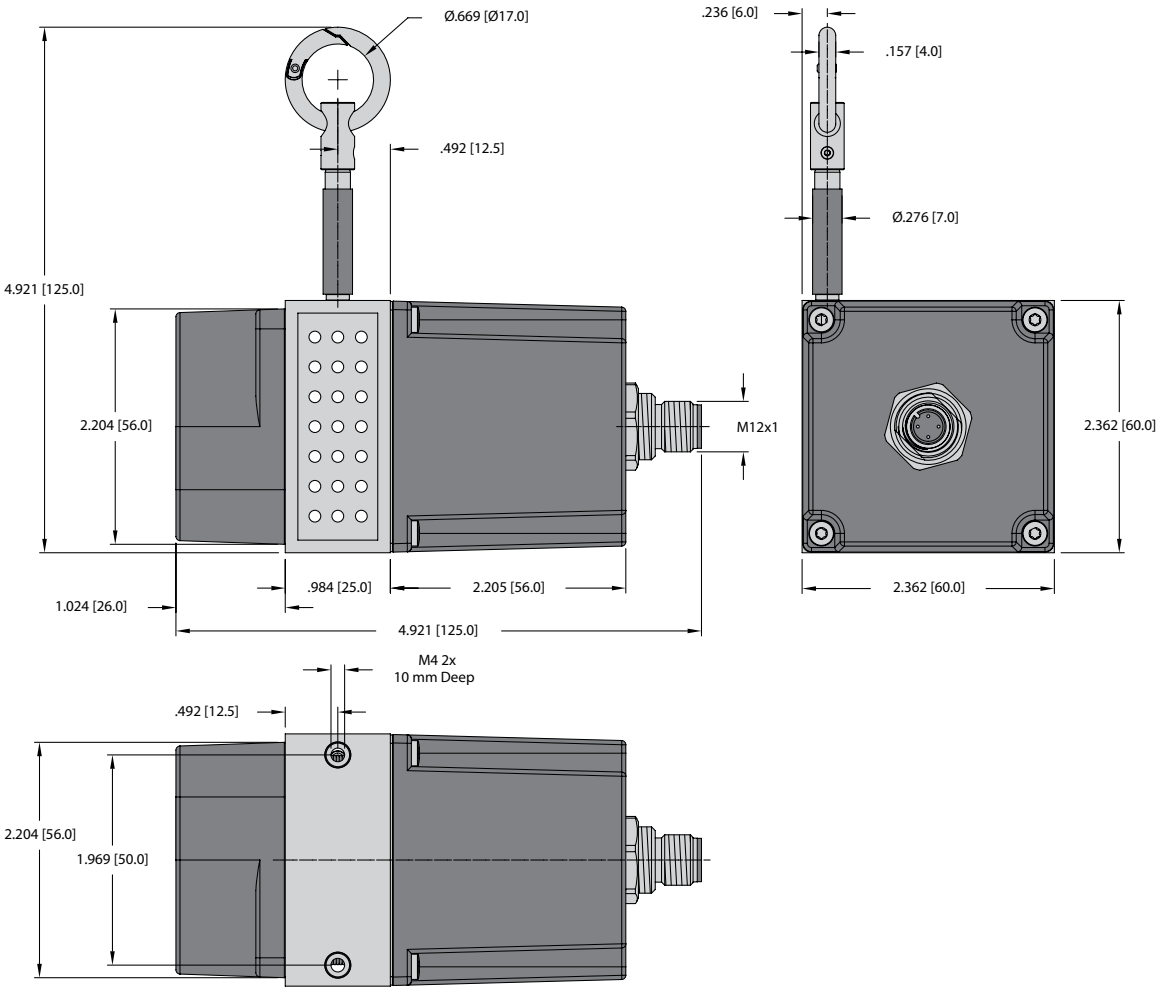

Accessories:

- See page H1, Connectivity, for cables and connectors

We reserve the right to make technical alterations without prior notice.

Draw Wire Encoder DW60

Dimensions: DW60 with Closed Housing

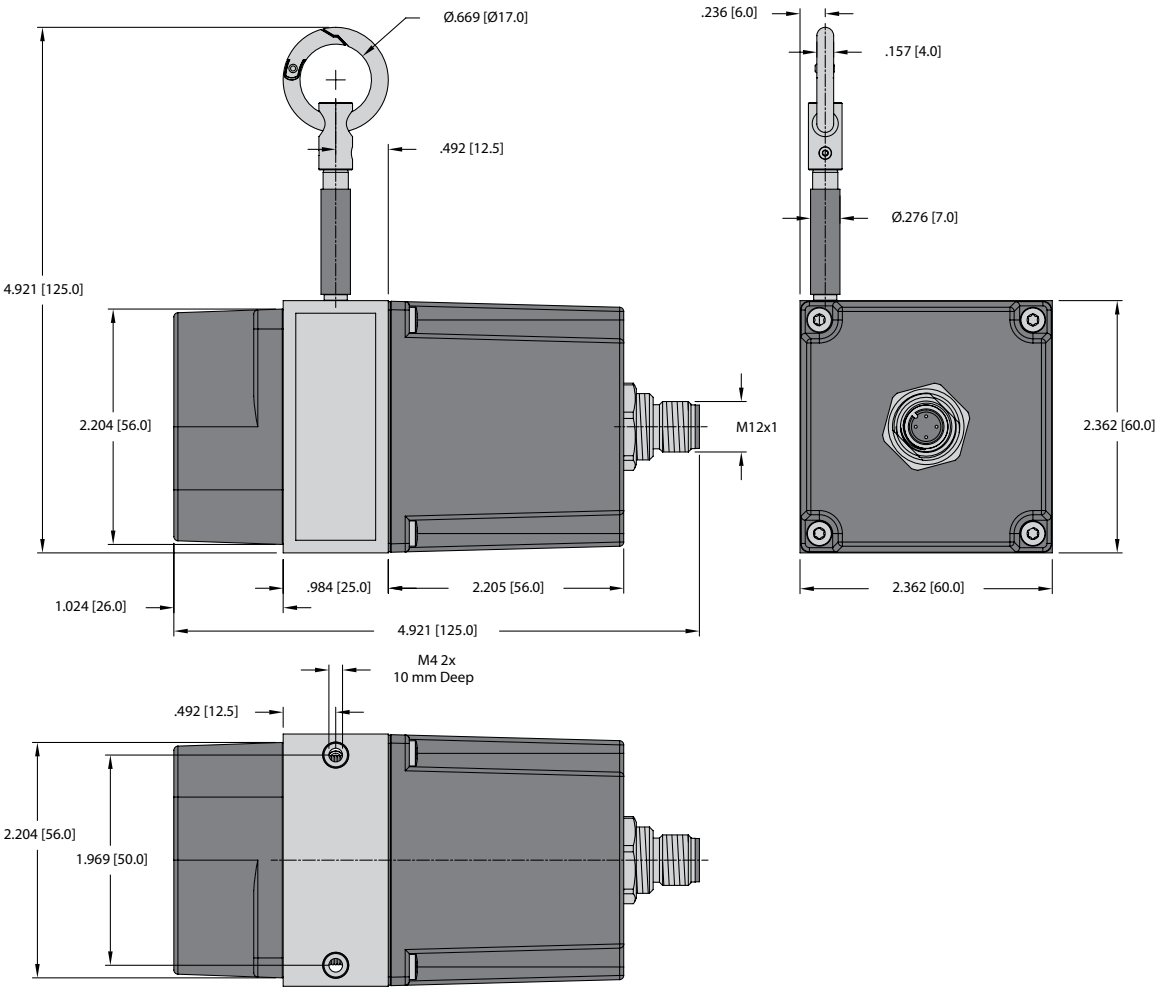

Accessories:

- See page H1, Connectivity, for cables and connectors

We reserve the right to make technical alterations without prior notice.

TURCK

Draw Wire Encoder DW120



Long service life | Wide temperature range | High protection level | Redundancy | V4A

Robust

- **Protection level up to IP69K and wide temperature range from -40 to 85 °C.**
- **The titanium-anodized aluminum housing and the stainless steel wires allow using the mechanics even in harsh conditions.**
- **Wire diameter (stainless steel, V4A) up to Ø1.5 mm - ideal for outdoor applications.**



RoHS compliant
Analog output
CANopen

Versatile

- **Measuring length up to 10 m.**
- **The right measuring wire and the right wire fastening for every application.**
- **Various constructions: open, closed housing or housing with perforated sheet steel cover.**

Advantage

- **Redundant outputs (mA, V, R, CANopen).**
- **Linearity up to ±0.1% of the measuring range.**

We reserve the right to make technical alterations without prior notice.

Technical Data (Draw Wire Mechanics):

Linearity:	±0.5 %
Improved linearity:	±0.25 % or ±0.1 %
Resolution:	see electrical characteristics
Sensor element:	potentiometer
Output signal:	4 - 20 mA, 0 - 10 V, potentiometer, CANopen
Redundant output signal:	optional for: 4 - 20 mA, 0 - 10 V, potentiometer, CANopen
Connection:	radial M12 connector or radial cable outlet (TPE cable), standard length 2 m
Protection:	IP67, optional IP69K (only with cable outlet)
Humidity:	max. 90% relative, no condensing
Max speed:	9.84 ft/s (3 m/s)
Max acceleration:	164.04 ft/s² (50 m/s²)
Weight:	2.86 - 3.52 lbs (1300 - 1600 g) depending on the measuring range
Housing:	aluminum, spring housing PA6
Spring force:	1.57 - 2.92 lbs (7 - 13 N) depending on the measuring length

Measuring Wire Characteristics:

V4A, Ø0.5 mm	
Measuring range:	3-10 m
Breaking force:	62.94 lbs (280 N)
TK:	16 x 10^{-6} K^{-1}
V4A, Ø1.0 mm	
Measuring range:	3-8 m
Breaking force:	211.77 lbs (942 N)
TK:	16 x 10^{-6} K^{-1}
V4A, Ø1.5 mm	
Measuring range:	3-6 m
Breaking force:	424.88 lbs (1890 N)
TK:	16 x 10^{-6} K^{-1}

Operating Principle:

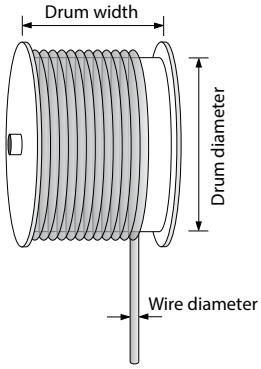

Construction:
The core of a draw wire device is a drum mounted on bearings, onto which a wire is wound. Winding takes place via a spring-loaded device.

Note:
Exceeding the maximum extension length of the draw wire will lead to damage to the wire and the mechanics.

Draw Wire Encoder DW120

Electrical Characteristics (Analog Output):

Output circuit [Key Code]:	4-20 mA [7A/27A]	0-10 V [8C/28C]	1 kΩ, potentiometer [PA/2PA]
Output current:	max. 50 mA in case of a failure	max. 10 mA, min. load 10 kΩ	–
Max. current consumption:	–	22.5 mA (non load)	–
Power supply:	12 - 30 VDC	12 - 30 VDC	max. 30 VDC
Response time:	< 1 ms from 0 to 100% and 100 to 0%	< 3 ms from 0 to 100% and 100 to 0%	–
Resolution:	limited by the noise	limited by the noise	theoretically unlimited
Noise:	0.03 mA_{pp} = 6 mV_{pp} at 200 Ω	typ. 3 mV_{pp}, max. 37 mV_{pp}	depending on the supply voltage
Recommended slider current:	–	–	< 1 µA
Reverse polarity protection:	yes	yes	–
Working temperature:	-4 to +185 °F (-20 to +85 °C) -40 to +185 °F (-40 to +85 °C)	-4 to +185 °F (-20 to +85 °C) -40 to +185 °F (-40 to +85 °C)	-4 to +185 °F (-20 to +85 °C) -40 to +185 °F (-40 to +85 °C)
Short circuit protected:	-	yes, sustained short-circuit protected	
Temperature coefficient:	0.0079 %/K	0.0037 %/K	±0.0025 %/K
Connection diagrams:	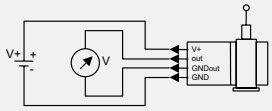	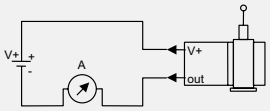	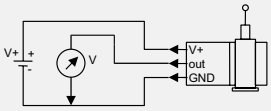
Electromagnetic compatibility acc. to EN61326-1:2013	-	–	
RoHS compliant acc. to EU guideline: 2011/65/EU			

Interface Characteristics CANopen:

CAN specification:	Full CAN 2.0B (ISO11898)
Communication profile:	CANopen CiA 301 V4.2.0
Device profile:	Encoder, absolute linear, CiA 406 V3.2.0
Error monitoring:	Producer Heartbeat, Emergency Message, Node Guarding
Node ID:	Default: 7, adjustable via SDO
PDO:	1x TPDO, static mapping
PDO functions:	Event-triggered, time-triggered, Sync-cyclic, Sync-acyclic
Transmission rate:	Default: 250 kbit/s, 1Mbps, 800, 500, 250, 125, 50, 20 kbps adjustable via SDO
Bus connection:	M12 connection, 5-pin
Integrated bus terminating resistor:	120 ohms ready-to-activate via SDO
Bus, galvanic isolation:	no
Power supply:	8-30 VDC
Working temperature:	-4 to +185 °F (-20 to +85 °C) Optional: -40 to +185 °F (-40 to +85 °C)
Current consumption:	typ. 10 mA at 24 V, 20 mA at 12 V
Measuring rate:	1 kHz with 16 bit resolution
Repeat accuracy:	±0.5%, ±0.25% or ±0.1%(according to the selected linearity)
Resolution:	0.002% of the measuring range
Reverse polarity protection:	yes
Electromagnetic compatibility acc. to EN61326-1:2013	
RoHS compliant acc. to EU guideline: 2011/65/EU	

Accessories:

- See page H1, Connectivity, for cables and connectors

We reserve the right to make technical alterations without prior notice.

Draw Wire Encoder DW120

Standard Wiring (Analog Output):

Signal Type	H1141 Pin:	1	2	3	4	PH
4-20mA [7A]	Connection Type	+V	N/C	Signal	N/C	⏚
0-10V [8C]	Connection Type	+V	Signal	Common (0V)	Signal 0V	⏚
1kΩ pot.[PA]	Connection Type	+V	Slider	Common (0V)	N/C	⏚

Standard Wiring (CANopen Output):

Signal Type	H1151 Pin:	3	2	1	4	5
CANopen	Connection Type	Common (0V)	+V	CAN GND	CAN High	CAN Low

Standard Wiring (2x Analog Output):

Signal Type	H1181 Pin:	1	2	3	4	5	6	7	8	PH
2x 4-20mA [27A]	Connection Type	+V1	N/C	Signal1	N/C	+V2	N/C	Signal2	N/C	⏚
2x 0-10V [28C]	Connection Type	+V1	Signal1	Common1 (0V)	Signal 0V1	+V2	Signal2	Common2 (0V)	Signal 0V2	⏚
2x 1kΩ pot.[2PA]	Connection Type	+V1	Slider1	Common1 (0V)	N/C	+V2	Slider2	Common2 (0V)	N/C	⏚

Standard Wiring (Analog Output):

Signal Type	Cable Color:	BN	WH	BU	BK	Shield
4-20mA [7A]	Connection Type	+V	N/C	Signal	N/C	⏚
0-10V [8C]	Connection Type	+V	Signal	Common (0V)	Signal 0V	⏚
1kΩ pot.[PA]	Connection Type	+V	Slider	Common (0V)	N/C	⏚

Standard Wiring (CANopen Output):

Signal Type	Cable Color:	WH	BN	GY	GN	YE
CANopen	Connection Type	Common (0V)	+V	CAN GND	CAN High	CAN Low

Standard Wiring (2x Analog Output):

Signal Type	Cable Color:	WH	BN	GN	YE	GY	PK	BU	RD	Shield
2x 4-20mA [27A]	Connection Type	+V1	N/C	Signal1	N/C	+V2	N/C	Signal2	N/C	⏚
2x 0-10V [28C]	Connection Type	+V1	Signal1	Common1 (0V)	Signal 0V1	+V2	Signal2	Common2 (0V)	Signal 0V2	⏚
2x 1kΩ pot.[2PA]	Connection Type	+V1	Slider1	Common1 (0V)	N/C	+V2	Slider2	Common2 (0V)	N/C	⏚

Wiring Diagram:

Analog Output:	CANopen Output:	2x Analog Output:
Male Encoder View	**Male Encoder View**	**Male Encoder View**
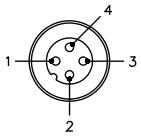	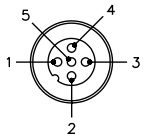	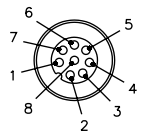
Mating Cordset: **RK 4.4T-*/S618**	Mating Cordset: **RKC 572-*M/S3117**	Mating Cordset: **RKC 8T-*/S618**

* Length in meters.

Accessories:

- See page H1, Connectivity, for cables and connectors

We reserve the right to make technical alterations without prior notice.

Draw Wire Encoder DW120

Part Number Key: DW120 with Encoder

A	B		C		D1	D2	D3		E		F		G/H
DW	3000	-	120	-	A	A	A	-	7A	-	H1141	/	Specials

A	Type
DW	Draw Wire

B	Measuring Range
3000	3000 mm Steel Wire
4000	4000 mm Steel Wire
5000	5000 mm Steel Wire
6000	6000 mm Steel Wire
7000	7000 mm Steel Wire
8000	8000 mm Steel Wire
9000	9000 mm Steel Wire
10000	10000 mm Steel Wire

C	Housing
120	120 mm

D1	Wire Type
A	V4A, Ø 0.5 mm
B	V4A, Ø 1.0 mm [1]
C	V4A, Ø 1.5 mm [2]

[1] For measuring range 3000-8000
[2] For measuring range 3000-6000

D2	Linearity
A	0.5%
B	0.25%
C	0.7%

D3	Housing
A	Open housing, open wire guide
B	Housing with perforated sheet metal cover, open wire guide
C	Housing with perforated sheet metal cover, closed wire guide
D	Closed housing, closed wire guide

E	Voltage Supply and Output Type
7A	12-30 VDC, 4-20mA
27A	12-30 VDC, 2x 4-20mA
8C	12-30 VDC, 0-10 V
28C	12-30 VDC, 2x 0-10 V
PA	30 VDC max, 1 kΩ Potentometer
2PA	30 VDC max, 2x kΩ Potentometer
9D16B	8-30 VDC, CANopen, 16 bit
29D16B	8-30VDC, 2x CANopen, 16-bit

F	Type of Connection
H1141	Radial 4-pin M12 Eurofast [3]
H1151	Radial 5-pin M12 Eurofast [4]
H1181	Radial 8-pin M12 Eurofast [5]
C	Radial Cable (2 m TPE)

[3] Only with output type '7A, 8C, PA'
[4] Only with output type '9D16B, 29D16B'
[5] Only with output type '27A, 28C, 2PA'

G	Special Temperature Rating
(Blank)	-4 to +185 °F (-20 to +85 °C)
N20	-40 to +185 °F (-40 to +85 °C)

H	Special Wire Fastener
(Blank)	Snap Ring, Ø 17 mm
N74	Eyelet, Ø 20 mm
N75	M4 thread

We reserve the right to make technical alterations without prior notice.

Turck Inc. | 3000 Campus Drive, Minneapolis, MN 55441 | T +1 800 544 7769 | F +1 763 553 0708 | www.turck.com

Draw Wire Encoder DW120

Housing types (the suitable housing type for every application)

Open housing, open wire guide [A]

For use in the presence of fine dust and liquids.

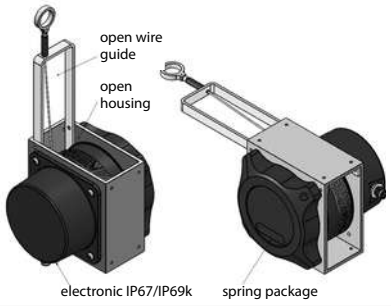

Housing with perforated sheet metal cover, open wire guide [B]

For use in the presence of dirt, particles size > 2 mm and liquids.

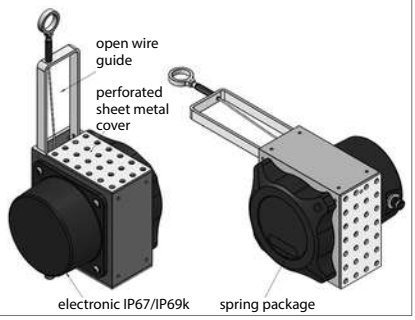

Housing with perforated sheet metal cover, closed wire guide [C]

For use in the presence of dirt, particles size > 2 mm and liquids.
Shock protection, wire cleaning device (in preparation).

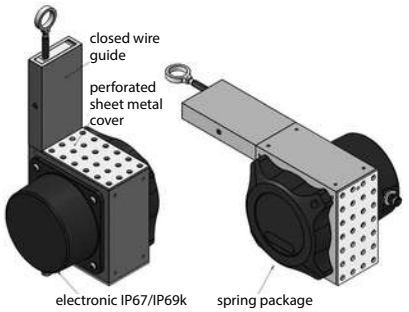

Closed housing, closed wire guide [D]

For use in the presence of sticky dust, cement, concrete, clay.
Shock protection, wire cleaning device (in preparation).

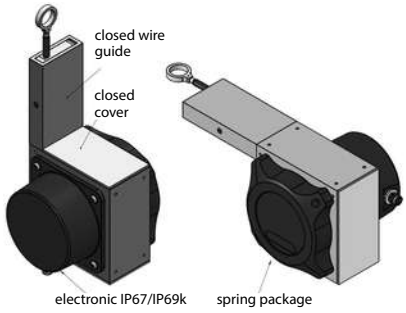

We reserve the right to make technical alterations without prior notice.

Draw Wire Encoder DW120

Dimensions: DW120 with Analog Sensor, Open Wire Guide, Special Wire Fastener N74

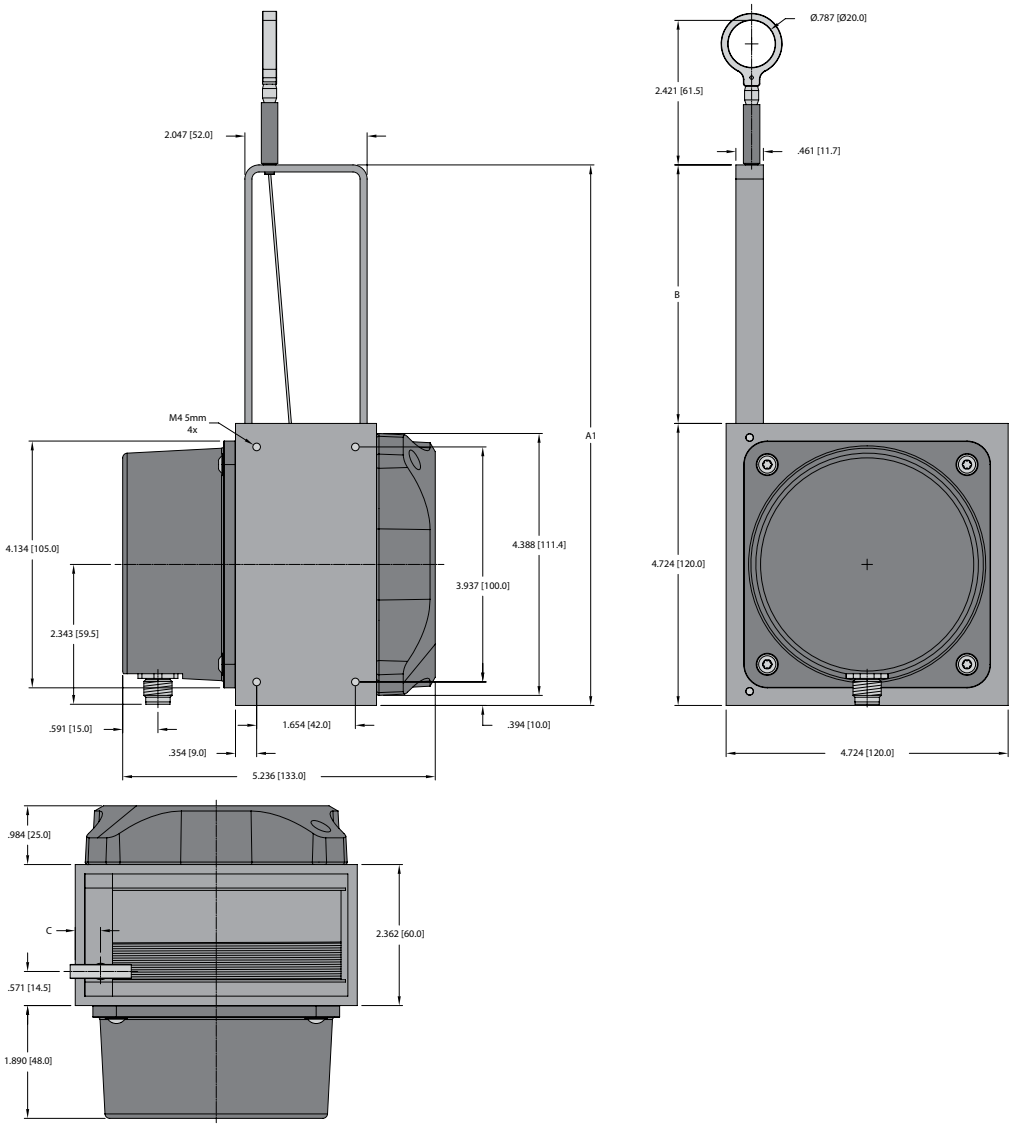

Wire diameter Ø 0.5 mm - drum pitch circumfrence: 13.2 [335.2]

Measuring length	A1	B	C
3-10 m	9.06 [230]	4.33 [110]	0.42 [10.75]

Wire diameter Ø 1.0 mm - drum pitch circumfrence: 13.26 [336.8]

Measuring length	A1	B	C
3-5 m	9.06 [230]	4.33 [110]	0.42 [10.75]
6-8 m	12.6 [320]	7.87 [200]	0.48 [12.25]

Wire diameter Ø 1.5 mm - drum pitch circumfrence: 13.32 [338.3]

Measuring length	A1	B	C
3-4 m	9.06 [230]	4.33 [110]	0.42 [10.75]
5-6 m	12.6 [320]	7.87 [200]	0.48 [12.25]

Accessories:

- See page H1, Connectivity, for cables and connectors

We reserve the right to make technical alterations without prior notice.

Draw Wire Encoder DW120

Dimensions: DW120 with Analog Sensor, Closed Wire Guide, Special Wire Fastener N74

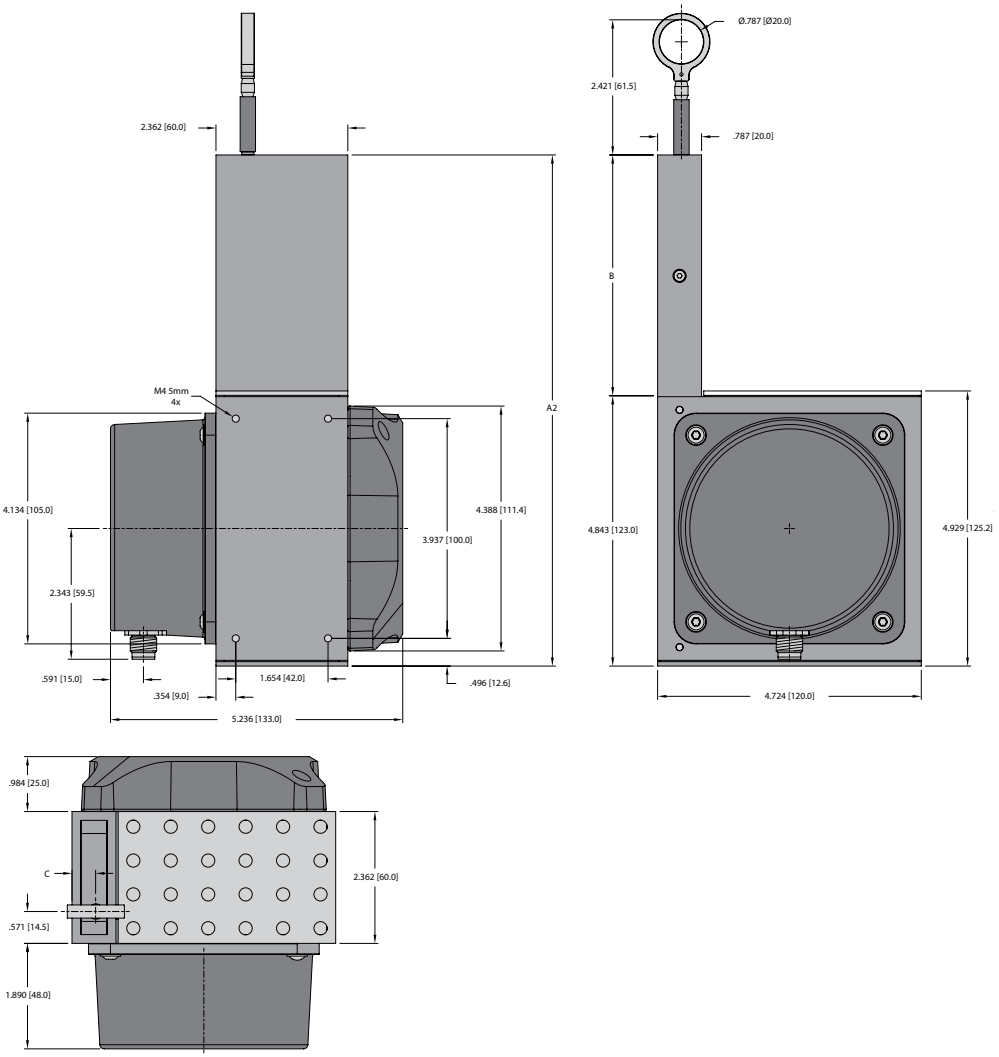

Wire diameter Ø 0.5 mm - drum pitch circumfrence: 13.2 [335.2]

Measuring length	A2	B	C
3-10 m	9.17 [233]	4.33 [110]	0.42 [10.75]

Wire diameter Ø 1.0 mm - drum pitch circumfrence: 13.26 [336.8]

Measuring length	A2	B	C
3-5 m	9.17 [233]	4.33 [110]	0.42 [10.75]
6-8 m	12.7 [323]	7.87 [200]	0.48 [12.25]

Wire diameter Ø 1.5 mm - drum pitch circumfrence: 13.32 [338.3]

Measuring length	A2	B	C
3-4 m	9.17 [233]	4.33 [110]	0.42 [10.75]
5-6 m	12.7 [323]	7.87 [200]	0.48 [12.25]

Accessories:

- See page H1, Connectivity, for cables and connectors

We reserve the right to make technical alterations without prior notice.

Draw Wire Encoder DW75

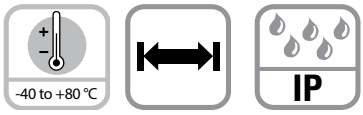

Wide temperature range | Long service life | High protection level



Robust
- **Compact housing.**
- **High-strength stainless steel draw wire.**
- **Low friction design.**
- **Wide temperature range.**

Dynamic
- **Traverse speed of 0.8 m/s.**
- **3 m measuring length.**

Versatile
- **Suitable for various sensors/encoders:** Absolute, fieldbus, incremental and analog.
- **Variable mounting possibities.**
- **Flexible connection options:** Cable, connector, radial, axial.
- **Scalable analog interface with limit switch function.**

Mechanical Characteristics (Draw Wire Mechanics):

Measuring range:		3,000 mm
Extension force:	Fmin	0.67 lbs (3.0 N)
Max. speed:		2.62 ft/s (0.8 m/s)
Working temperature:		-40 to +176 °F (-40 to +80 °C)
Repeat accuracy:		±0.15 mm
Linearity:		±0.35%
Weight:		approx. 1.10 lbs (500 g) (depending on the sensor/encoder used)
Materials:		housing: plastic/zinc die-cast wire: stainless steel Ø 0.9 mm, plastic coated
Protection (encoder only):		IP65

Operating Principle:

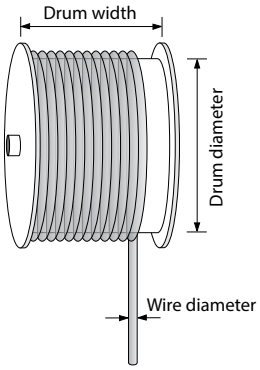

Construction:
The core of a draw wire device is a drum mounted on bearings, onto which a wire is wound. Winding takes place via a spring-loaded device.

Note:
Exceeding the maximum extension length of the draw wire will lead to damage to the wire and the mechanics.

We reserve the right to make technical alterations without prior notice.

Draw Wire Encoder DW75

Electrical Characteristics (Analog Output, Scaled to Measuring Range):

Analog output [Key Code]:	0-10 V [8D]	4-20 mA [7F]	Potentiometer [PB]
Output:	0-10 V	4-20 mA	10 KΩ
Supply voltage:	15-28 VDC	15-28 VDC	max. 48 VDC
Load:	max. 500 Ω	max. 500 Ω	
Operating temperature:	-40 to +176 °F (-40 to +80 °C)	-40 to +176 °F (-40 to +80 °C)	-40 to +176 °F (-40 to +80 °C)

ROHS compliant according to EU guideline 2011/65/EU

Part Number Key: DW75 with Encoder

A	B		C		D		E	F		G		H
DW	3000	-	75	-	10	-	2B	2000	-	H1181	/	Specials

A	Type
DW	Draw Wire

B	Measuring Range
3000	3000 mm Steel Wire

C	Housing
75	75 mm

D	Encoder Type
10	RI-10, Incremental
28	RM-28, Absolute, SSI
29	RM-29, Absolute, CANopen, EtherCAT, PROFIBUS-DP, PROFINET IO
103	RM-103, Absolute, SSI
105	RM-105, Absolute, CANopen, EtherNet/IP, Modbus
118	RM-118, Absolute, SSI
121	RM-121, Absolute, CANopen, SAE J1939

E	Voltage Supply and Output Type
Dependent on Encoder Selected [1)]	

F	Pulse Rate/Resolution
Dependent on Encoder Selected [1)]	

G	Type of Connection
Dependent on Encoder Selected [1)]	

H	Specials
Dependent on Encoder Selected [1)]	

[1)]Recommended encoders listed below

Accessories:

- See page H1, Connectivity, for cables and connectors

We reserve the right to make technical alterations without prior notice.

Draw Wire Encoder DW75

Standard resolutions for draw wire with incremental encoder RI-10

Drum circumference (mm)	200	200	200
Pulses/revolution (ppr)	200	2000	4000
Pulses/mm	1	10	20
Resolution (mm)	1	0.1	0.05

Standard resolutions for draw wire with absolute encoder RM-118 or RM-121, (12-bit ST, programable via bus)

Drum circumference (mm)	200
Pulses/revolution (ppr)	4096
Pulses/mm	20.5
Resolution (mm)	0.05

Recommended standard variants (with incremental, absolute encoder)

Draw wire assembly	Mounted encoder	Interface	Power supply	Type of connection	Resolution / Protocol	Option
DW3000-75-10-2B2000-H1181	RI-10T6S-2B2000-H1181	Push-pull with inverted signal	10-30 VDC	Radial M12 connector	2000 ppr	-
DW3000-75-118-3C12S12M-H1181	RM-118T6S-3C12S12M-H1181	SSI	10-30 VDC	Radial M12 connector	4096 ppr / SSI-Gray-Code	-
DW3000-75-121-9D38B-H1151	RM-121T6S-9D38B-H1151	CANopen	10-30 VDC	Radial M12 connector	CANopen encoder profile DS406 V4.0	-

Other variants (with absolute encoder)

Draw wire assembly	Mounted encoder	Interface	Power supply	Type of connection	Resolution / Protocol	Option
DW3000-75-103-3C12S12M-H1181	RM-103T6S-3C12S12M-H1181	SSI	10-30 VDC	1 x radial M12 connector	4096 ppr / SSI-Gray-Code	SET button + status LED
DW3000-75-28-3C24B-H1181	RM-28T6S-3C24B-H1181	SSI	10-30 VDC	1 x radial M12 connector	4096 ppr / SSI-Gray-Code	SET button + status LED
DW3000-75-105-9D38B-B1M12/N46	RM-105T6S-9D38B-B1M12/N46	CANopen	10-30 VDC	1 x radial M12 connector	CANopen encoder profile DS406 V3.2	SET button
DW3000-75-29-9D28B-R2M12/N46	RM-29T6S-9D28B-R2M12/N46	CANopen	10-30 VDC	2 x radial M12 connector	CANopen encoder profile DS406 V3.2	SET button
DW3000-75-121-9F43B-H1151	RM-121T10C-9F43B-H1151	SAE J1939	10-30 VDC	1 x radial M12 connector	CAN high-speed acc. to ISO 11898, CAN specification 2.0 B	-
DW3000-75-29-9A28B-R3M12/N46	RM-29T6S-9A28B-R3M12/N46	PROFIBUS	10-30 VDC	3 x radial M12 connector	Profibus-DP V0 encoder profile Class 2	SET button
DW3000-75-29-9C28B-R3M12	RM-29T6S-9C28B-R3M12	EtherCAT	10-30 VDC	3 x radial M12 connector	EtherCAT with CoE 3.2.10	-
DW3000-75-29-9E28B-R3M12	RM-29T6S-9E28B-R3M12	PROFINET IO	10-30 VDC	3 x radial M12 connector	PROFINET encoder profile version 4.1	-
DW3000-75-105-9N32B-B3M12	RM-105T6S-9N32B-B3M12	EtherNet/IP	10-30 VDC	3 x axial M12 connector	EtherNet/IP	-

We reserve the right to make technical alterations without prior notice.

Part Number Key: DW75 with Encoder (analog, scalable with limit switch function)

A	B		C		D		E	F		G		H
DW	3000	-	75	-	116	-	7A	SALNS	-	H1151	/	Specials

A	Type
DW	Draw Wire

B	Measuring Range
3000	3000 mm Steel Wire

C	Housing
75	75 mm

D	Encoder Type
116	RM-116, Absolute

E	Voltage Supply and Output Type
Dependent on Encoder Selected [1]	

F	Measuring Range
Dependent on Encoder Selected [1]	

G	Type of Connetion
Dependent on Encoder Selected [1]	

[1] Recommended encoders listed below

Accessories:

- See page H1, Connectivity, for cables and connectors

Draw Wire Encoder DW75

Recommended standard variants (with analog encoder, scalable with limit switch function)

Draw wire assembly	Mounted encoder	Interface	Power supply	Type of connection	Resolution / Protocol	Option
DW3000-75-116-7ASALWL-H1151	RM-116T6S-7ASALWL-H1151	Analog, 4-20 mA	10-30 VDC	Radial M12 connector	12 Bit / 4-20 mA	scalable without limit switch function [1]
DW3000-75-116-8BSALWL-H1151	RM-116T6S-8BSALWL-H1151	Analog, 0-10 V	15-30 VDC	Radial M12 connector	12 Bit / 0-10 V	scalable without limit switch function [1]
DW3000-75-116-7ASALNS-H1151	RM-116T6S-7ASALNS-H1151	Analog, 4-20 mA	10-30 VDC	Radial M12 connector	12 Bit / 4-20 mA	scalable with limit switch function [1]
DW3000-75-116-8BSALNS-H1151	RM-116T6S-8BSALNS-H1151	Analog, 0-10 V	15-30 VDC	Radial M12 connector	12 Bit / 0-10 V	scalable with limit switch function [1]

[1] Unscaled

Part Number Key: DW75 with analog sensor (scaled to measuring range)

A	B		C		D		E
DW	3000	-	75	-	7F	-	H1141

A	Type
DW	Draw Wire

B	Measuring Range
3000	3000 mm Steel Wire

C	Housing
75	75 mm

D	Voltage Supply and Output Type
7F	12-28 VDC, 4-20 mA
8D	12-28 VDC, 0-10 V
PB	48 VDC max, 10 KΩ, Potentiometer

E	Type of Connetion
H1141	Radial 4-pin M12 Eurofast Connector

Standard Wiring:

Pin	Color	0-10 V	4-20 mA	10 kOhm
1	BN	V+	V+	V+
2	WH	Signal	N/C	Slider
3	BU	GND	Signal	GND
4	BK	GND Sig.	N/C	N/C

Wiring Diagram:

Male Encoder View

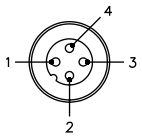

Mating Cordset:
RK 4.4T-*/S618

* Length in meters.

Accessories:

- See page H1, Connectivity, for cables and connectors

We reserve the right to make technical alterations without prior notice.

Draw Wire Encoder DW75

Dimensions: DW75 with Encoder

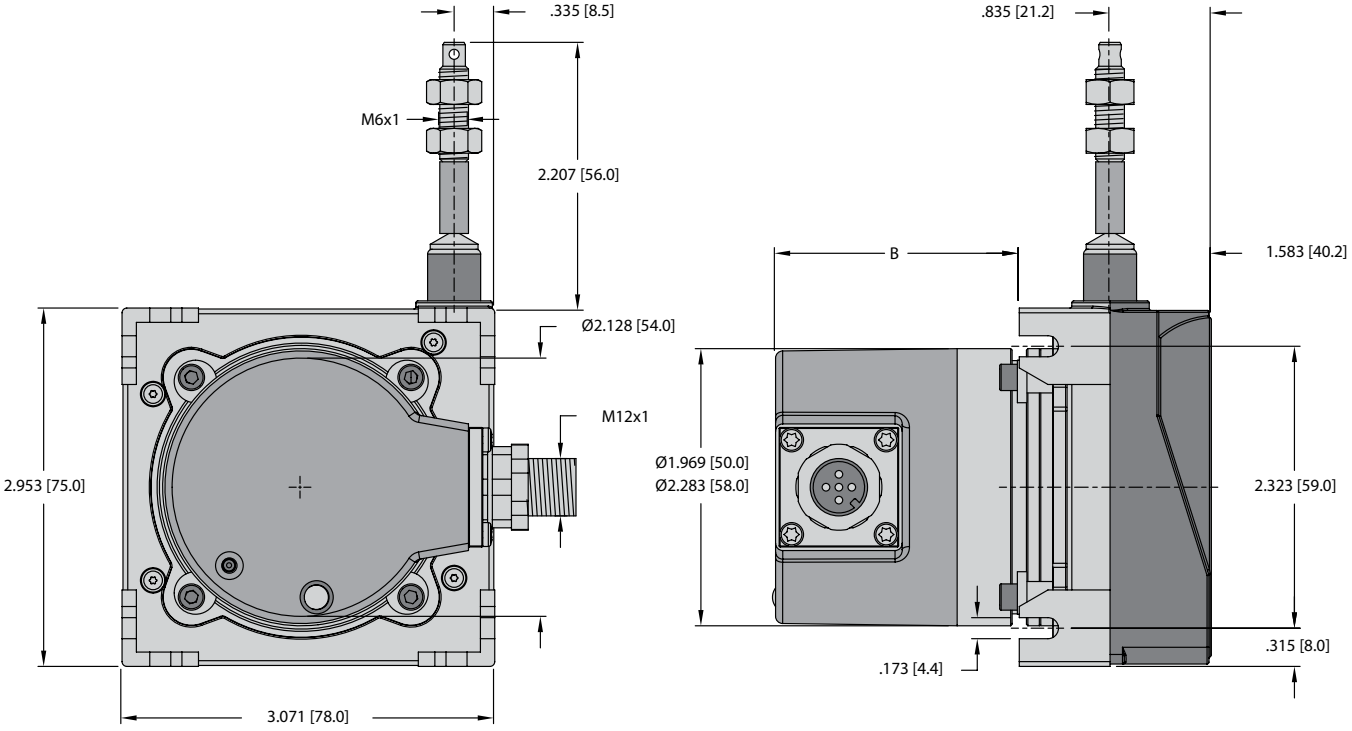

Dimension B depends on the encoder used

Encoder	Draw wire assembly	**B** in. [mm]
Incremental (RI-10)	DW*****-75-10-******-*****	1.69 [43.0]
Absolute (RM-28)	DW*****-75-28-******-*****	2.19 [55.5]
Absolute (RM-29)	DW*****-75-29-******-*****	3.28 [83.2]
Absolute (RM-103)	DW*****-75-103-******-*****	2.19 [55.5]
Absolute (RM-105) CANopen	DW*****-75-105-******-*****	2.58 [65.5]
Absolute (RM-105) Ethernet/IP	DW*****-75-105-******-*****	2.58 [65.5]

We reserve the right to make technical alterations without prior notice.

Draw Wire Encoder DW75

Dimensions: DW75 with analog sensor (scalable to measuring range)

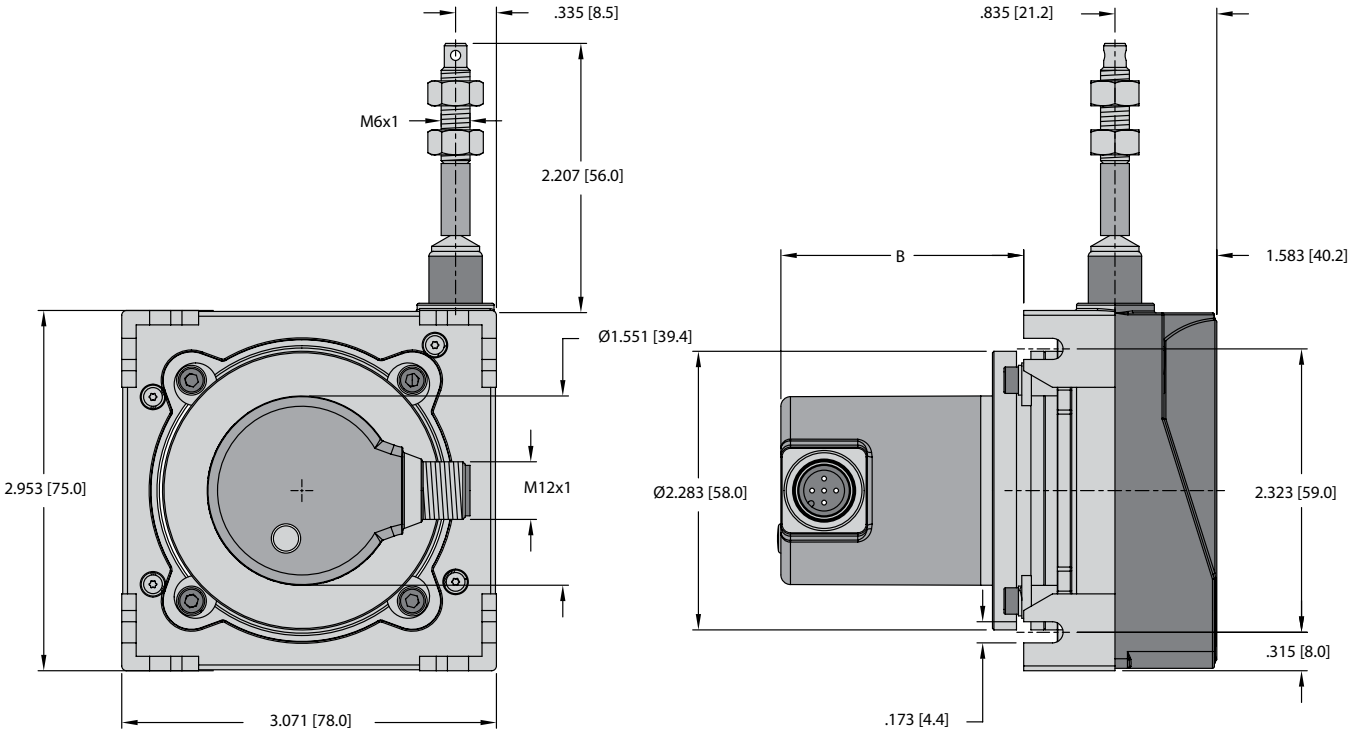

Dimension B depends on the encoder used

Encoder	Draw wire assembly	**B** in. [mm]
Absolute (RM-116)	DW*****-75-116-******-*****	1.99 [50.55]
Absolute (RM-118)	DW*****-75-118-******-*****	1.99 [50.55]
Absolute (RM-121)	DW*****-75-121-******-*****	1.99 [50.55]

We reserve the right to make technical alterations without prior notice.

Linear Position Technology
Draw Wire Mechanics with Encoder or Analog Sensor

Draw Wire Encoder DW108

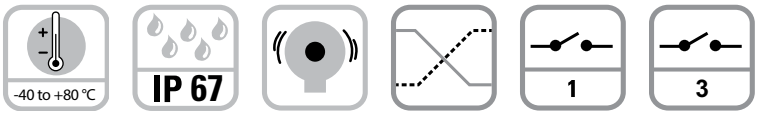

Wide temperature range | High protection level | Shock/vibration resistant | Redundancy | Relay output | Switching output

Robust
- **Measuring length up to 5 m.**
- **Different types of sensors (analog, incremental, CANopen, relay output, switch).**
- **Linearity up to ±0.1% of the measuring range.**
- **IP67 protection level and wide temperature range from -40 to +85 °C.**



RoHS compliant
Analog output
CANopen

Versatile
- **Integrated inclinometer.**
- **Redundant sensors.**
- **The suitable measuring length for every application.**
- **For even higher plant availability.**

Advantages
- **Cost, space and installation work saving.**
- **Simple selection and fast installation.**
- **High accuracy at economic prices.**
- **Reliability and long service life for outdoor applications.**

Mechanical Characteristics (Draw Wire Mechanics):

Measuring range:	1.0 - 5.0 m
Measuring wire:	
material	304 stainless steel, nylon coated
diameter	Ø 0.9 mm
	Ø 0.61 mm (ABZ incremental)
Wire fastening:	Eyelet
internal diameter	Ø 8 mm
outer diameter	Ø 15 mm
height	2 mm
Max. speed:	1 m/s
Max. acceleration:	10 m/s²
Linearity (entire measuring range):	
analog	±0.8%
incremental (1 - 2 m)	±0.1%
incremental (3 - 5 m)	±0.3%
CANopen/relay	±0.5%
Repeat accuracy (entire measuring range):	
analog	±0.3%
incremental (1 - 2 m)	±0.1%
incremental (3 - 5 m)	±0.15%
CANopen/relay	±0.1%
Retraction force:	0.44 lbs (2 N)
Extension force:	1.79 lbs (8 N)
Drum circumference:	245 mm
Housing:	poly carbonate reinforced with glass fibers
Proctection:	IP67
Temperature range:	-40 to +185 °F (-40 to +85 °C)
Weight:	1.1 lbs (0.5 kg)
Stock resistance acc. to EN 60068-2-27:	30 g (300 m/s²), 11 ms
Vibration resistance acc. to EN 60068-2-6:	10 g (100 m/s²), 10-500 Hz

Operating Principle:

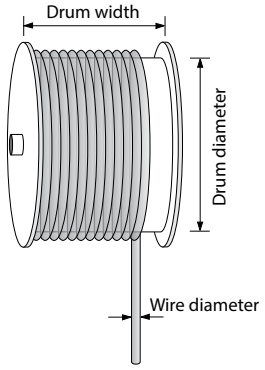

Construction:
The core of a draw wire device is a drum mounted on bearings, onto which a wire is wound. Winding takes place via a spring-loaded device.

Note:
Exceeding the maximum extension length of the draw wire will lead to damage to the wire and the mechanics.

We reserve the right to make technical alterations without prior notice.

Draw Wire Encoder DW108

Electrical Characteristics:

Power supply:	9-30 VDC 5 VDC ±10% (Analog only) 12-30 VDC (Analog only)
Electromagnetic compatibility:	acc. to EN 61326-1, EN 61326-3-1
RoHS compliant acc. to EU guideline 2011/65/EU	

Analog sensor:

Output signal:	analog
Resolution:	12 bit

Incremental output:

Output signal:	AB (Z optional)
Resolution:	512 / 1024 ppr
Current consumption (non load):	max. 100 mA
Output current:	max. 50 mA
Circuit:	TTL

CANopen:

Output signal:	CANopen (DS301)
Resolution:	14 bit
Resolution inclinometer:	0.1°
Accuracy inclinometer:	±0.6°
Temperature drift inclinometer:	±0.01% / °C

Relay output:

Output signal:	1x relay (Normally Open)
Maximum current:	50 mA
Hysteresis:	20 mm (factory setting)

Switch output:

Output signal:	switch
Maximum current:	0.5 A
Mechanical service live:	
without load	min. 1,000,000 switching operations (60 switching operations/ min.)
under load	min. 30,000 switching operations (30 switching operations/ min.)

We reserve the right to make technical alterations without prior notice.

Accessories:

- See page H1, Connectivity, for cables and connectors

Draw Wire Encoder DW108

Standard Wiring:

Analog Sensor Output:

Connection Type	+V	N/C	Common (0V)	Out 1	Out 2
M12 Eurofast	1	2	3	4	5

Incremental Output:

Connection Type	+V	Common (0V)	A	B	Z
M12 Eurofast	1	2	3	4	5
Cable	WH	YE	BN	GN	GY

CANopen Output:

Connection Type	Common (0V)	+V	CAN GND	CAN High	Can Low
M12 Eurofast	3	2	1	4	5

Relay Output:

Connection Type	TEACH	+V	Common (0V)	C	NO
M12 Eurofast	1	2	3	4	5

The switching point of the relay can be set by means of a button connected to pin 1 (Teach). To do so, position the draw wire mechanic at the desired switching point and then press the button once.

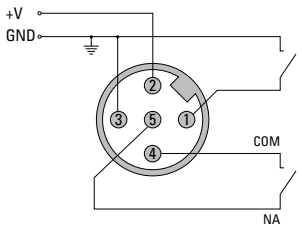

Switching Output:

Connection Type	NC1	NO1	C1	NC2	NO2	C2	NC3	NO3	C3	N/C	N/C	N/C
M12 Eurofast	1	2	3	4	5	6	7	8	9	10	11	12

+V	Power supply +VDC
0V	Power supply GND (0V)
Output1	Analog voltage output 1
Output2	Analog voltage output 2
A	Incremental output channel A
B	Incremental output channel B
Z	Incremental output channel Z
TEACH	Teach function input
C	Relay contact C
NO	Relay contact Normally Open
C1	Switching contact C1
C2	Switching contact C2
C3	Switching contact C3
NO1	Switching contact Normally Open 1
NO2	Switching contact Normally Open 2
NO3	Switching contact Normally Open 3
NC1	Switching contact Normally Closed 1
NC2	Switching contact Normally Closed 2
NC3	Switching contact Normally Closed 3

Wiring Diagram:

Analog Output

Male Encoder View
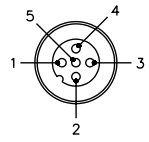
Mating Cordset: **RK 4.5T-*/S618**

Incremental Output

Male Encoder View
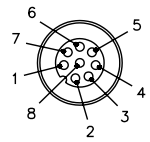
Mating Cordset: **E-RKC 8T-930-***

CANopen Output

Male Encoder View
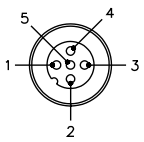
Mating Cordset: **RKC 572-*M/S3117**

Relay Output

Male Encoder View
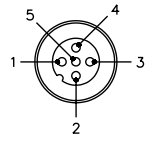
Mating Cordset: **RK 4.5T-***

Switching Output

Male Encoder View
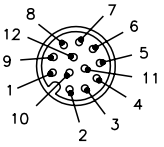
Mating Cordset: **RKC 12T-***

* Length in meters.

We reserve the right to make technical alterations without prior notice.

Draw Wire Encoder DW108

Part Number Key: DW108 with Absolute Encoder

A	B		C		D		E		F
DW	1000	-	108	-	9D14B	-	H1151	/	Specials

A	Type
DW	Draw Wire

B	Measuring Range
1000	1000 mm Steel Wire
2000	2000 mm Steel Wire
3000	3000 mm Steel Wire
4000	4000 mm Steel Wire
5000	5000 mm Steel Wire

C	Housing
108	108 mm

D	Voltage Supply and Output Type
9D14B	9-30 VDC, CANopen, 14-bit

E	Type of Connection
H1151	5-pin M12 Eurofast Connector

F	Specials
(BLANK)	No Options
N81	1 Inclinometer
N82	2 Inclinometers

Part Number Key: DW108 with Incremental Encoder

A	B		C		D		E		F
DW	1000	-	108	-	FL512	-	H1151	/	Specials

A	Type
DW	Draw Wire

B	Measuring Range
1000	1000 mm Steel Wire
2000	2000 mm Steel Wire
3000	3000 mm Steel Wire
4000	4000 mm Steel Wire
5000	5000 mm Steel Wire

C	Housing
108	108 mm

D	Voltage Supply and Output Type
FL512	9-30 VDC, TTL, 512 ppr, A&B Only
FL1024	9-30 VDC, TTL, 1024 ppr, A&B Only
FM512	9-30 VDC, TTL, 512 ppr, A/B/Z
FM1024	9-30 VDC, TTL, 1024 ppr, A/B/Z

E	Type of Connection
H1151	5-pin M12 Eurofast Connector [1]
C	Radial Cable (2 m PUR)

[1] Must include '/N88' in Specials

F	Specials
(BLANK)	No Options
N88	Standard 5-pin M12 Wiring [2]

[2] /N88 must be included with 'H1151'

Part Number Key: DW108 with Analog Sensor

A	B		C		D		E
DW	1000	-	108	-	8F	-	H1151

A	Type
DW	Draw Wire

B	Measuring Range
1000	1000 mm Steel Wire
2000	2000 mm Steel Wire
3000	3000 mm Steel Wire
4000	4000 mm Steel Wire
5000	5000 mm Steel Wire

C	Housing
108	108 mm

D	Voltage Supply and Output Type
7E	12-30 VDC, 4-20 mA
7G	12-30 VDC, 4-20 mA, Redundant
8F	12-30 VDC, 0-10 V
8G	12-30 VDC, 0-10 V, Redundant
HA	5 VDC, 0.5-4.5 V
HB	5 VDC, 0.5-4.5 V, Redundant
HC	12-30 VDC, 0.5-4.5 V
HD	12-30 VDC, 0.5-4.5 V, Redundant

E	Type of Connection
H1151	5-pin M12 Eurofast Connector

We reserve the right to make technical alterations without prior notice.

Draw Wire Encoder DW108

Part Number Key: DW108 with Relay Output

A	B		C		D		E
DW	1000	-	108	-	KA	-	H1151

A	Type
DW	Draw Wire

B	Measuring Range
1000	1000 mm Steel Wire
2000	2000 mm Steel Wire
3000	3000 mm Steel Wire
4000	4000 mm Steel Wire
5000	5000 mm Steel Wire

C	Housing
108	108 mm

D	Voltage Supply and Output Type
KA	9-30VDC, 1x Relay(Normally Open)

E	Type of Connection
H1151	5-pin M12 Eurofast Connector

Part Number Key: DW108 with Relay Output

A	B		C		D		E
DW	1000	-	108	-	KB	-	H11121

A	Type
DW	Draw Wire

B	Measuring Range
1000	1000 mm Steel Wire
2000	2000 mm Steel Wire
3000	3000 mm Steel Wire
4000	4000 mm Steel Wire
5000	5000 mm Steel Wire

C	Housing
108	108 mm

D	Voltage Supply and Output Type
KB	9-30 VDC, 3x switching contact (Normally Open/Closed)

E	Type of Connection
H11121	12-pin M12 Eurofast Connector

We reserve the right to make technical alterations without prior notice.

Turck Inc. | 3000 Campus Drive, Minneapolis, MN 55441 | T +1 800 544 7769 | F +1 763 553 0708 | www.turck.com

Draw Wire Encoder DW108

Technology in Detail

CANopen with inclinometer:

Setting possibility 360°	Setting possibility ±180°
	
angle: 0-360°	angle: ±180°

Redundant signals possible.

Setting possibilities:

- Switching between setting possibilities 180° and 360°.
- Switching between synchronous and asynchronous output.
- Change of direction of rotation (cw/ccw).
- Setting and resetting an offset.

We reserve the right to make technical alterations without prior notice.

Draw Wire Encoder DW108

Dimensions: DW108 with Analog Sensor

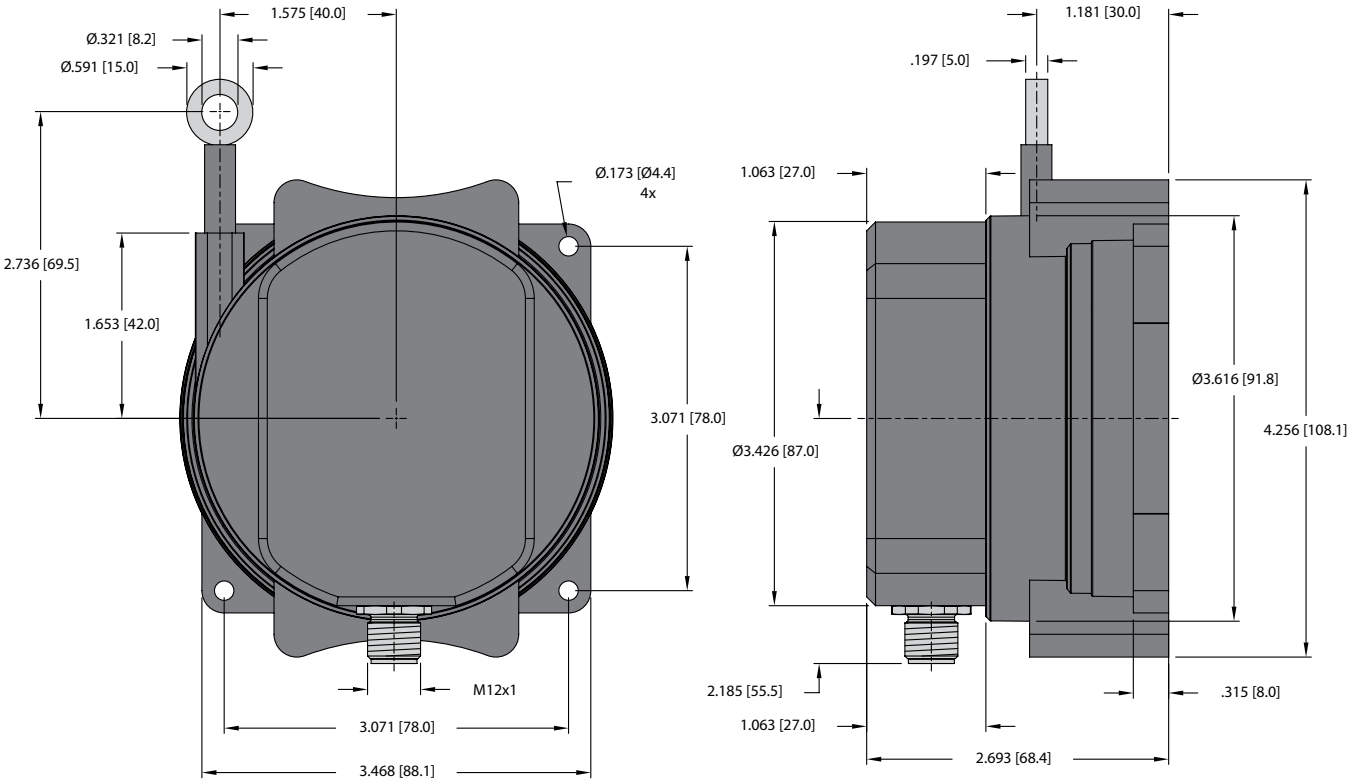

We reserve the right to make technical alterations without prior notice.

TURCK

Draw Wire Encoder DW124

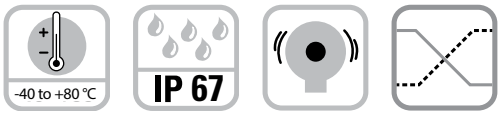

Wide temperature range | High protection level | Shock/vibration resistant | Redundancy

Robust

- **Measuring length 6-10 m.**
- **Different types of sensors (analog, CANopen).**
- **Linearity up to ±0.5% of the measuring range.**
- **IP67 protection level and wide temperature range from -40 to +85 °C.**



RoHS compliant
Analog output
CANopen

Versatile

- **Integrated inclinometer.**
- **Redundant sensors.**
- **The suitable measuring length for every application.**
- **For even higher plant availability.**

Advantages

- **Cost, space and installation work saving.**
- **Simple selection and fast installation.**
- **High accuracy at economic prices.**
- **Reliability and long service life for outdoor applications.**

Mechanical Characteristics (Draw Wire Mechanics):

Measuring range:	6 - 10 m
Measuring wire:	
material	304 stainless steel, nylon coated
diameter	0.9 mm
Wire fastening:	Eyelet
internal diameter	Ø 8 mm
outer diameter	Ø 15 mm
height	2 mm
Max. speed:	1 m/s
Max. acceleration:	10 m/s²
Linearity (entire measuring range):	
analog	±1.0%
CANopen	±0.5%
Repeat accuracy (entire measuring range):	
analog	±0.5%
CANopen	±0.2%
Retraction force:	1.01 lbs (4.5 N)
Extension force:	2.02 lbs (9 N)
Housing:	poly carbonate reinforced with glass fibers
Proctection:	IP67
Temperature range:	-40 to +185 °F (-40 to +85 °C)
Weight:	approx. 2.13 lbs (0.97 kg)
Stock resistance acc. to EN 60068-2-27:	30 g (300 m/s²), 11 ms
Vibration resistance acc. to EN 60068-2-6:	10 g (100 m/s²), 10-500 Hz

Operating Principle:

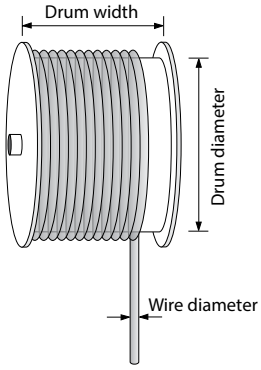

Construction:
The core of a draw wire device is a drum mounted on bearings, onto which a wire is wound. Winding takes place via a spring-loaded device.

Note:
Exceeding the maximum extension length of the draw wire will lead to damage to the wire and the mechanics.

We reserve the right to make technical alterations without prior notice.

Draw Wire Encoder DW124

Electrical Characteristics:

Power supply:	9-30 VDC 5 V DC ±10% (Analog Only) 12-30 VDC (Analog Only)
Electromagnetic compatibility:	acc. to EN 61326-1, EN 61326-3-1
RoHS compliant acc. to EU guideline 2011/65/EU	

Analog sensor:

Output signal:	analog
Resolution:	12 bit

CANopen:

Output signal:	CANopen (DS301)
Resolution:	14 bit
Resolution inclinometer:	0.1°
Accuracy inclinometer:	±0.6°
Temperature drift inclinometer:	±0.01% / °C

We reserve the right to make technical alterations without prior notice.

Standard Wiring (Analog Output):

Connection Type	+V	N/C	Common (0V)	Out 1	Out 2
Pin	1	2	3	4	5

Standard Wiring (CANopen Output):

Connection Type	Common (0V)	+V	CAN GND	CAN High	Can Low
Pin	3	2	1	4	5

Wiring Diagram:

Analog Output	CANopen Output
Male Encoder View	**Male Encoder View**
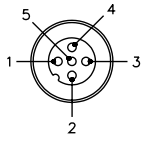	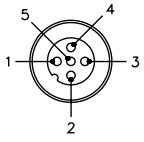
Mating Cordset: **RK 4.5T-*/S618**	Mating Cordset: **RKC 572-*M/S3117**

* Length in meters.

Accessories:

- See page H1, Connectivity, for cables and connectors

Draw Wire Encoder DW124

Part Number Key: DW124 with CANopen and inclinometer

A	B		C		D		E		F
DW	6000	-	124	-	9D14B	-	H1151	/	Specials

A	Type
DW	Draw Wire

B	Measuring Range
6000	6000 mm Steel Wire
7000	7000 mm Steel Wire
8000	8000 mm Steel Wire
9000	9000 mm Steel Wire
10000	10000 mm Steel Wire

C	Housing
124	124 mm

D	Voltage Supply and Output Type
9D14B	9-30 VDC, CANopen, 14 bit

E	Type of Connection
H1151	5-pin M12 Eurofast Connector

F	Specials
(BLANK)	No Options
N81	1 Inclinometer
N82	2 Inclinometers

Part Number Key: DW124 with Analog Sensor

A	B		C		D		E
DW	6000	-	124	-	8F	-	H1151

A	Type
DW	Draw Wire

B	Measuring Range
6000	6000 mm Steel Wire
7000	7000 mm Steel Wire
8000	8000 mm Steel Wire
9000	9000 mm Steel Wire
10000	10000 mm Steel Wire

C	Housing
124	124 mm

D	Voltage Supply and Output Type
7E	12-30 VDC, 4-20 mA
7G	12-30 VDC, 4-20 mA, Redundant
8F	12-30 VDC, 0-10 V
8G	12-30 VDC, 0-10 V, Redundant
HA	5 VDC, 0.5-4.5 V
HB	5 VDC, 0.5-4.5 V, Redundant
HC	12-30 VDC, 0.5-4.5 V
HD	12-30 VDC, 0.5-4.5 V, Redundant

E	Type of Connection
H1151	5-pin M12 Eurofast Connector

We reserve the right to make technical alterations without prior notice.

Draw Wire Encoder DW124

Technology in Detail

CANopen with inclinometer:

Setting possibility 360°	Setting possibility ±180°
	
angle: 0-360°	angle: ±180°

Redundant signals possible.

Setting possibilities:

- Switching between setting possibilities 180° and 360°.
- Switching between synchronous and asynchronous output.
- Change of direction of rotation (cw/ccw).
- Setting and resetting an offset.

We reserve the right to make technical alterations without prior notice.

Turck Inc. | 3000 Campus Drive, Minneapolis, MN 55441 | T +1 800 544 7769 | F +1 763 553 0708 | www.turck.com

Draw Wire Encoder DW124

Dimensions: DW124

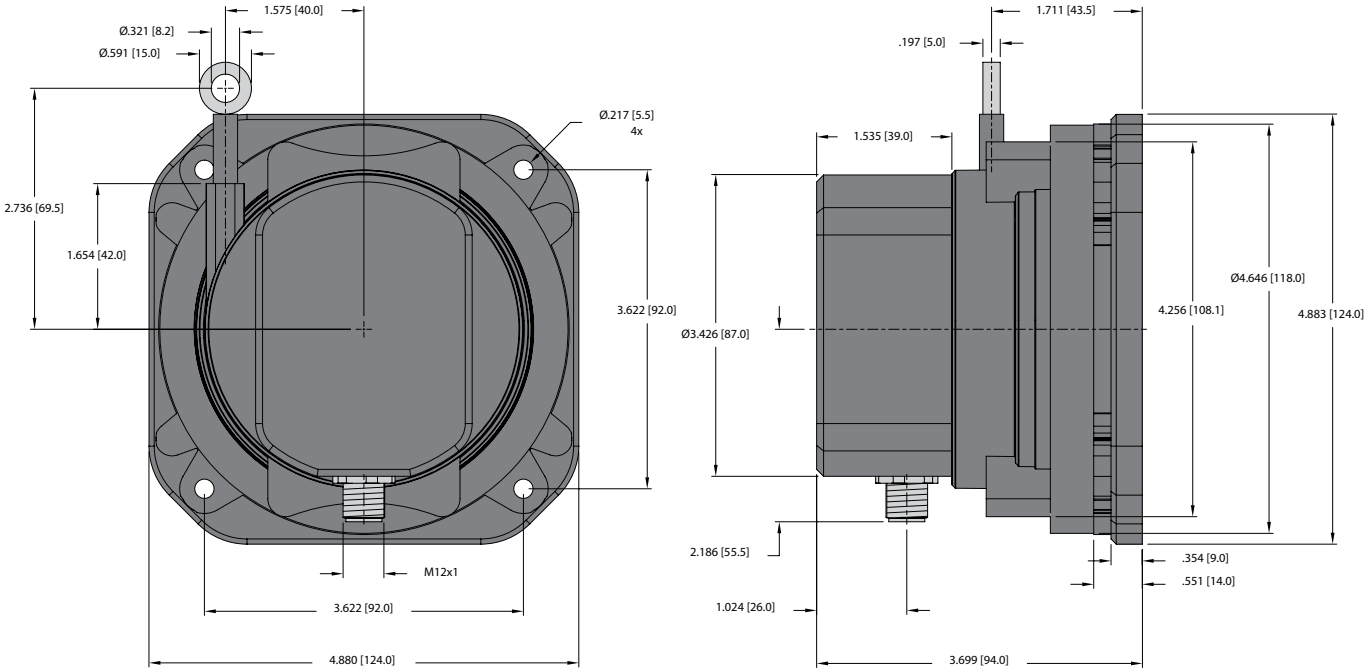

We reserve the right to make technical alterations without prior notice.

Standard Draw Wire Encoder DW125

Description
- Direct length measurement.
- High repeatability.



Versatile
- Easy assembly.
- No additional guidance system.
- Wire guidance possible using guide pulleys.
- Multiple encoder outputs available.

Compact
- Measuring lengths up to 6,000 mm.

Mechanical Characteristics of the Draw-Wire Encoder:

Measuring range:	up to 6,000 mm
Repeatability:	±0.15 mm
Extension force:	1.79 lbs (8 N)
Travel speed:	max. 9.84 ft/s (3,000 mm/s)
Required pull on spring:	min. 1.12 lbs (5 N) (on wire)
Drum circumference:	200 mm
Wire diameter:	parawire nylon 2.8 m: 1.05 mm, steel wire 6 m: 0.54 mm
Weight:	approx. 2.32 lbs (700 g)

Note:
If the maximum extension length is exceeded, the wire and transducer will be damaged.

We reserve the right to make technical alterations without prior notice.

Turck Inc. | 3000 Campus Drive, Minneapolis, MN 55441 | T +1 800 544 7769 | F +1 763 553 0708 | www.turck.com

Standard Draw Wire Encoder DW125

Part Number Key: DW125 with Encoder

A	B		C		D		E	F		G		H
DW	2800	-	125	-	10	-	2B	2000	-	H1181	/	Specials

A	Type
DW	Draw Wire

B	Measuring Range
2800	2800 mm Para Nylon Wire
6000	6000 mm Steel Wire

C	Housing
125	105 mm

D	Encoder Type
10	RI-10, Incremental
28	RM-28, Absolute, SSI
29	RM-29, Absolute, CANopen, EtherCAT, PROFIBUS-DP, PROFINET IO
103	RM-103, Absolute, SSI
105	RM-105, Absolute, CANopen, Ethernet/IP, Modbus
118	RM-118, Absolute, SSI
121	RM-121, Absolute, CANopen, SAE J1939

E	Voltage Supply and Output Type
Dependent on Encoder Selected [1)]	

F	Pulse Rate/Resolution
Dependent on Encoder Selected [1)]	

G	Type of Connection
Dependent on Encoder Selected [1)]	

H	Specials
Dependent on Encoder Selected [1)]	

[1)]Recommended encoders listed below

We reserve the right to make technical alterations without prior notice.

Accessories:

- See page H1, Connectivity, for cables and connectors

Standard Draw Wire Encoder DW125

Standard resolutions for draw wire with incremental encoder RI-10, drum circumference 200 mm

Encoder PPR	200	2000	4000
Pulses/mm	1	10	20
Resolution (mm)	1	0.1	0.05

Standard resolutions for draw wire with absolute encoder RM-118 or RM-121, drum circumference 200 mm

Pulses/revolution	4096
Pulses/mm	20.5
Resolution (mm)	0.05

Recommended standard variants (with incremental, absolute encoder)

Draw wire assembly	Mounted encoder	Interface	Power supply	Type of connection	Resolution / Protocol	Option
DWxxxx-125-10-2B2000-H1181	RI-10T6S-2B2000-H1181	Push-pull with inverted signal	10-30 VDC	Radial M12 connector	2000 ppr	-
DWxxxx-125-118-3C12S12M-H1181	RM-118T6S-3C12S12M-H1181	SSI	10-30 VDC	Radial M12 connector	4096 ppr / SSI-Gray-Code	-
DWxxxx-125-121-9D38B-H1151	RM-121T6S-9D38B-H1151	CANopen	10-30 VDC	Radial M12 connector	CANopen encoder profile DS406 V4.0	-

Other variants (with absolute encoder)

Draw wire assembly	Mounted encoder	Interface	Power supply	Type of connection	Resolution / Protocol	Option
DWxxxx-125-103-3C12S12M-H1181	RM-103T10C-3C12S12M-H1181	SSI	10-30 VDC	1 x radial M12 connector	4096 ppr / SSI-Gray-Code	SET button + status LED
DWxxxx-125-28-3C24B-H1181	RM-28T10C-3C24B-H1181	SSI	10-30 VDC	1 x radial M12 connector	4096 ppr / SSI-Gray-Code	SET button + status LED
DWxxxx-125-105-9D38B-H1151/N46	RM-105T10C-9D38B-B1M12/N46	CANopen	10-30 VDC	1 x radial M12 connector	CANopen encoder profile DS406 V3.2	SET button
DWxxxx-125-29-9D28B-R2M12/N46	RM-29T10C-9D28B-R2M12/N46	CANopen	10-30 VDC	2 x radial M12 connector	CANopen encoder profile DS406 V3.2	SET button
DWxxxx-125-121-9F43B-H1151	RM-121T10C-9F43B-H1151	SAE J1939	10-30 VDC	1 x radial M12 connector	CAN high-speed acc. to ISO 11898, CAN specification 2.0 B	-
DWxxxx-125-29-9A28B-R3M12/N46	RM-29T10C-9A28B-R3M12/N46	PROFIBUS	10-30 VDC	3 x radial M12 connector	Profibus-DP V0 encoder profile Class 2	SET button
DWxxxx-125-29-9C28B-R3M12	RM-29T10C-9C28B-R3M12	EtherCAT	10-30 VDC	3 x radial M12 connector	EtherCAT with CoE 3.2.10	-
DWxxxx-125-29-9E28B-R3M12	RM-29T10C-9E28B-R3M12	PROFINET IO	10-30 VDC	3 x radial M12 connector	PROFINET encoder profile version 4.1	-
DWxxxx-125-105-9N32B-B3M12	RM-105T10C-9N32B-B3M12	EtherNet/IP	10-30 VDC	3 x axial M12 connector	EtherNet/IP	-

We reserve the right to make technical alterations without prior notice.

Turck Inc. | 3000 Campus Drive, Minneapolis, MN 55441 | T +1 800 544 7769 | F +1 763 553 0708 | www.turck.com

Standard Draw Wire Encoder DW125

Part Number Key: DW125 with Encoder (analog, scalable with limit switch function)

A	B		C		D		E	F		G		H
DW	2800	-	125	-	116	-	7A	SARNS	-	H1151	/	Specials

A	Type
DW	Draw Wire

B	Measuring Range
2800	2800 mm Para Nylon Wire
6000	6000 mm Steel Wire

C	Housing
125	105 mm

D	Encoder Type
116	RM-116, Absolute, Analog

E	Voltage Supply and Output Type
Dependent on Encoder Selected [1)]	

F	Measuring Range
Dependent on Encoder Selected [1)]	

G	Type of Connection
Dependent on Encoder Selected [1)]	

H	Specials
Dependent on Encoder Selected [1)]	

[1)]Recommended encoders listed below

Recommended standard variants (with analog encoder, scalable with limit switch function)

Draw wire assembly	Mounted encoder	Interface	Power supply	Type of connection	Resolution / Protocol	Option
DWxxxx-125-116-7ASALNS-H1151	RM-116T10C-7ASALNS-H1151	Analog, 4-20 mA	10-30 VDC	Radial M12 connector	12 Bit / 4-20 mA	scalable without limit switch function
DWxxxx-125-116-8BSALNS-H1151	RM-116T10C-8BSALNS-H1151	Analog, 0-10 V	15-30 VDC	Radial M12 connector	12 Bit / 0-10 V	scalable without limit switch function
DWxxxx-125-116-7ASALWL-H1151	RM-116T10C-7ASALWL-H1151	Analog, 4-20 mA	10-30 VDC	Radial M12 connector	12 Bit / 4-20 mA	scalable with limit switch function
DWxxxx-125-116-8BSALWL-H1151	RM-116T10C-8BSALWL-H1151	Analog, 0-10 V	15-30 VDC	Radial M12 connector	12 Bit / 0-10 V	scalable with limit switch function

Accessories:

- See page H1, Connectivity, for cables and connectors

We reserve the right to make technical alterations without prior notice.

Standard Draw Wire Encoder DW125

Dimensions: DW125

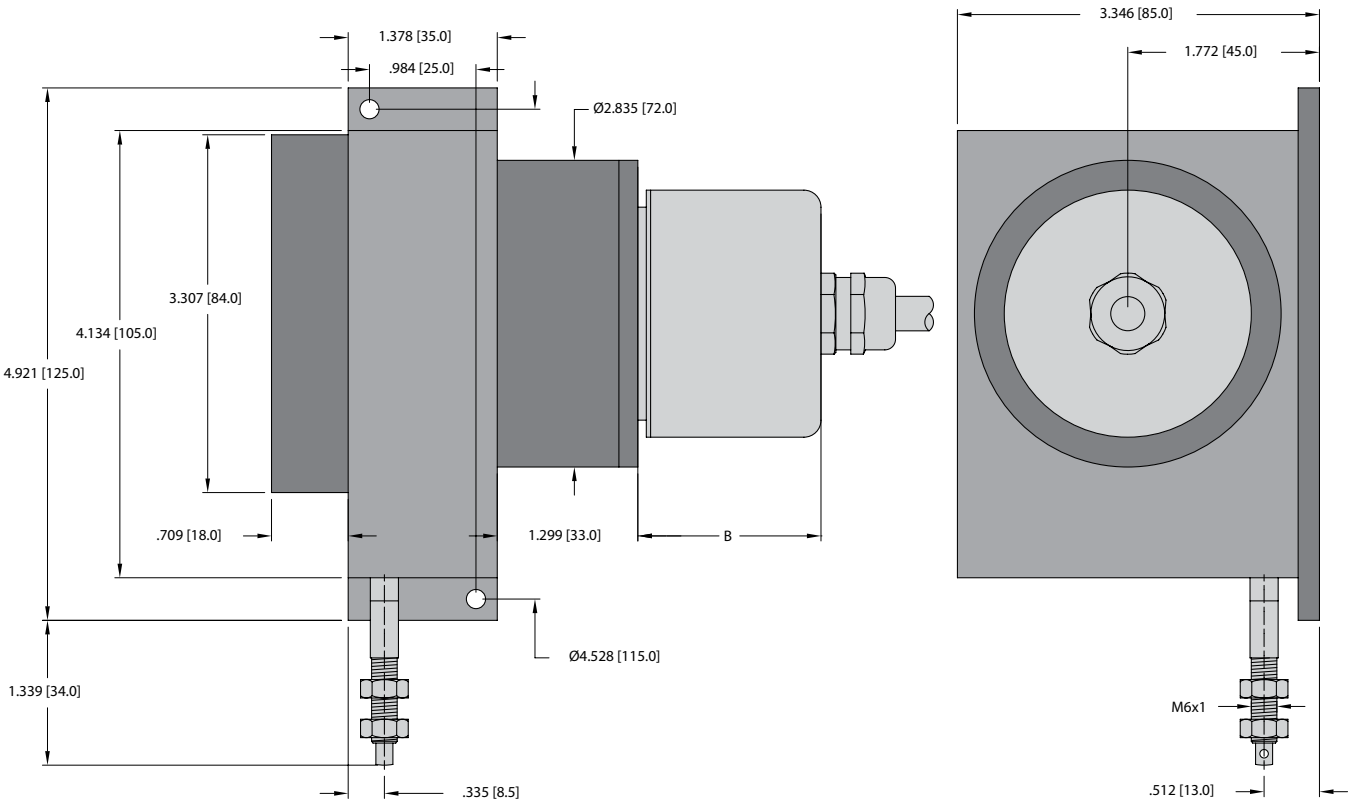

Dimension B depends on the encoder used

Encoder	Draw wire assembly	**B** in. [mm]
Incremental (RI-10)	DW****-125-10-******-*****	1.46 [37.0]
Absolute (RM-28)	DW****-125-28-******-*****	1.95 [49.5]
Absolute (RM-29)	DW****-125-29-******-*****	3.04 [77.2]
Absolute (RM-103)	DW****-125-103-******-*****	1.95 [49.5]
Absolute (RM-105) [Ethernet/IP]	DW****-125-105-******-*****	2.34 [59.4]
Absolute (RM-105) [CANopen]	DW****-125-105-******-*****	2.76 [70.0]
Absolute (RM-116)	DW****-125-116-******-*****	1.96 [49.8]
Absolute (RM-118)	DW****-125-118-******-*****	1.96 [49.8]
Absolute (RM-121)	DW****-125-121-******-*****	1.96 [49.8]

We reserve the right to make technical alterations without prior notice.

Mini Measurement System Type WE-1



High rotational speed | Magnetic field proof | Short-circuit proof

Rugged

- Wide temperature range -4 to +185 °F (-20 to +85 °C).
- Robust strain relief on cable outlet thanks to multiple clamping.



RoHS compliant

Versatile

- Low power consumption despite high scanning rate.
- Broad input voltage range (8-30 V).
- Fix, connect, ready to go.

Compact

- 74 x 50 x 52 mm.
- Easy to install, one unit.

Mechanical Characteristics:

Measuring wheel circumference:	100 mm
Resolution:	Up to 0.1 mm
Radial cable outlet:	2 m PVC cable
Speed max.:	2000 RPM
Protection:	IP64

Electrical Characteristics:

Output circuit [Key Code]:	Push-pull [2A] (7272)
Supply voltage:	8-30 VDC
Power consumption (no load):	≤ 20 mA
Permissible load/channel:	20 mA
Pulse frequency:	≥ 100 kHz

Standard Wiring:

Connection Type	Case Ground	Common (0 V)	+V	A	$\overline{A}$	B	$\overline{B}$	Z	$\overline{Z}$
Cable	Shield/Drain	WH	BN	GN	YE	GY	PK	BU	RD

Part Number Key: WE-1

A		B		C		D		E	F		G
WE	-	01	-	100	-	1	-	2A	100	-	C

A	Type
WE	Wheel Encoder, IP64

B	Encoder Type
01	RI-01, Incremental

C	Measuring Wheel Circumference
100	100 mm

D	Measuring Wheel Material
1	Knurled Aluminum
2	Rubber, Shure Hardness: 60

E	Voltage Supply and Output Type
2A	8-30 VDC, Push-Pull (w/ Inverted Signals)

F	Pulse Rate
100, 200, 1000*	

*Resolution = 100 mm circumfrence wheel is divided by pulse rate to determine resolution in mm

G	Type of Connection
C	Radial Cable (2 m PUR)

We reserve the right to make technical alterations without prior notice.

Draw Wire Encoder Accessories

Various wire types and wire fastenings

Wire types:
- 0.5 mm (304)
- 0.51 mm (316)
- 1.0 mm (316)
- 1.0 mm plastic-coated (316 = 0.81 mm, plastic 0.19 mm)
- 0.6 mm synthetic rope

Wire fastenings:
Clip M4 thread Eyelet



Application-specific installation possibilities

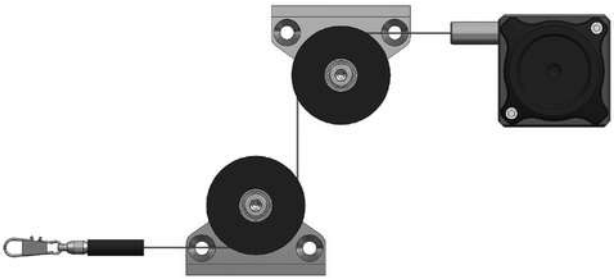

Part Number:
RA-DW-SEC-2M

Description:
2 m steel wire extension

Part Number:
RA-DW-SEC-5M

Description:
5 m steel wire extension



Part Number:
RA-DW-PEC-2M

Description:
2 m parawire extension

Part Number:
RA-DW-SEC-10M

Description:
10 m steel wire extension

Part Number:
RDR-1

Description:
Guide Pulley

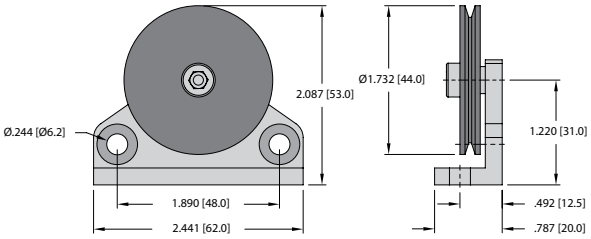

Accessories:

- See page H1, Connectivity, for cables and connectors

We reserve the right to make technical alterations without prior notice.

Turck Inc. | 3000 Campus Drive, Minneapolis, MN 55441 | T +1 800 544 7769 | F +1 763 553 0708 | www.turck.com

Notes:

We reserve the right to make technical alterations without prior notice.

Notes:

We reserve the right to make technical alterations without prior notice.



Turck Inc. | 3000 Campus Drive, Minneapolis, MN 55441 | T +1 800 544 7769 | F +1 763 553 0708 | www.turck.com

ANGULAR POSITION TECHNOLOGY
INCLINOMETERS

SERIES		PAGE
Inclinometers	General Information	**C2**
	Inclinometers	**C4**
	Accessories	**C6**

We reserve the right to make technical alterations without prior notice.

Inclinometers

WHAT IS AN INCLINOMETER?

Inclinometers measure angular tilt in reference to gravity. Turck inclinometers contain a MEMS (Micro-Electro-Mechanical System) device that incorporates a microelectromechanical capacitive element into the sensor that utilizes two parallel plate electrodes, one stationary and one attached to a spring-mass system. The suspended electrode is free to move with the change in angle relative to earth's gravity. This results in a measurable change in the capacitance between the two plates that is proportional to the angle of deflection. These signals are conditioned to provide voltage outputs (0.1 to 4.9 VDC) or current outputs (4 to 20 mA).

The microprocessor design and the MEMS technology allows for a compact, precise inclinometer in a very robust, industrialized package. The inclinometer carries an IP68 rating for ingress protection, and can operate in temperatures from -30 °C to +70 °C (-22 °F to +158 °F), with the option for -40 °C (-40 °F). These sensors can be mounted up to a maximum of ±85° angle for dual axis models and 360° for single axis models.





WHERE CAN I USE AN INCLINOMETER?

Inclinometer sensors may be used in a wide variety of applications to solve unique feedback requirements where the customer needs to level platforms or control tilt angle.

The device's small size lends itself to a multitude of applications, such as:

- Commercial machines: diggers, cranes, rotary tables, bulldozers, road construction machinery
- Dancer arm position for web tension control
- Solar plants: mirror and cell positioning
- Machine control: levers, pedals, flaps, mixing machines, hydraulic jacks
- Vertical and horizontal drills used in tunnel and road construction and immersion equipment
- Offshore plants: platforms, cranes
- HVAC louvers, flood control gates, telescopes
- Conveyors, utility vehicles, agricultural and forestry machinery, cranes and hoisting technology – and more

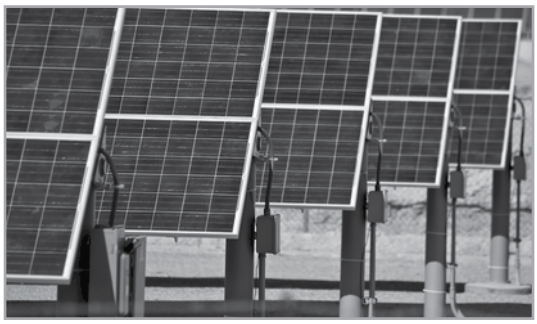







We reserve the right to make technical alterations without prior notice.

Turck Inc. | 3000 Campus Drive, Minneapolis, MN 55441 | T +1 800 544 7769 | F +1 763 553 0708 | www.turck.com

Inclinometers

Why Choose Turck Inclinometers?

High Accuracy and Repeatability

- ≤ 0.1% repeatable, after a warm-up time of 0.5 hours, ensures consistent outputs.
- Resolution as fine as ≤ 0.04° for Dual Axis analog family.
- Resolution as fine as < 0.01° for CANopen Single Axis family.
- Temperature compensated down to -40 °C (-40 °F) and up to +70 °C (+158 °F) on select versions. Temperature coefficients as low as 0.01 °/K for analog models or 0.008 °/K for CANopen models.





Expanded Line

- Dual axis with analog voltage or current outputs measuring up to -85 to +85°.
- Single axis with analog voltage or current outputs measuring from 1 to 360° of travel.
- 360° Single axis with configurable dual PNP set points.
- CANopen interface now available in single axis or dual axis that can be used in a wide variety of industrial and mobile applications.
- Factory default measuring ranges.
- Non-standard measuring ranges available upon request. Contact factory for availability and specifications.
- Prewired connections potted in cable and value add connectivity is available on request. Contact factory for availability and specifications.





Rugged, Reliable and Compact

- Rated to 55 Hz (1 mm) vibration and 30 g (11 ms) shock for a wide variety of applications.
- Q20L60 analog and set point versions measure 20 mm x 30 mm x 60 mm, making them the most compact IP68/ IP69K rated inclinometer on the market.
- Q42 CANopen inclinometer housing measures 42 mm x 42.5 mm x 68 mm, and incorporates bus-in and bus-out M12 Eurofast® connectors for ease of use.
- IP68 rated according to Turck's stringent test protocol:
  - » 24 hours continuous storage at 70 °C (158 °F)
  - » 24 hours continuous storage at -25 °C (-13 °F)
  - » 7 days submerged at a depth of 1 meter
  - » 10 thermal shock changes from -25 to +70 °C (-13 to +158 °F), 1 hour dwell cycle







Easy to Use

- Zero point offset on the Dual Axis Analog inclinometers can be field adjusted by applying a signal to the teach input pin or by using an optional teach pendant.
- Span of the Single Axis Analog inclinometers can be easily scaled by using the teach input pin to set the span in the field.
- Discrete outputs of the Single Axis Digital inclinometer can be independently set by using the teach input pin or by using an optional teach pendant.
- CANopen inclinometers come with CiA DS-301, profile CiA DSP-410 for ease of configuration.







We reserve the right to make technical alterations without prior notice.

Inclinometers

Dual Axis with Analog Output

Turck's standard product is a low profile dual axis (X and Y) inclinometer with standard angular ranges of ±10°, ±45°, ±60° and ±85°, with additional ranges optional. Each axis has independent outputs. The 5 VDC version is a ratiometric design and the power is limited between 4.75 and 5.25 VDC. This means that the output is proportional to the supply voltage. The 10-30 VDC supply units are regulated and the output is fixed regardless.

- ±10°, ±45°, ±60°, ±85°
- Current 4-20 mA, 10-30 VDC
- Voltage output 0.1-4.9 V, 10-30 VDC
- Voltage output 0.1-4.9 V @ 5 VDC
- Teachable zero point up to ±15% with teach adapter VB2-SP4
- FM Class I, Div 2 approved when used with Guard-Q20L60 and approved cordset.



Part Number	ID Number	Angular Range	Resolution	Absolute Accuracy	Zero Point Calibration	Temperature Drift	Temperature Coefficient	Load Resistance	Dimensional Drawing	Wiring Diagram
Dual Axis – Analog Output, 4-20 mA										
B2N10H-Q20L60-2LI2-H1151	**1534012**	±10°	< 0.04°	±0.3°	±5°	≤ ±0.05 °/K	0.01 °/K	≤ 200 Ω	1	1
B2N45H-Q20L60-2LI2-H1151	**1534013**	±45°	< 0.1°	±0.5°	±15°	≤ ±0.025 °/K	0.03 °/K	≤ 200 Ω	1	1
B2N60H-Q20L60-2LI2-H1151	**1534014**	±60°	< 0.14°	±0.5°	±15°	≤ ±0.025 °/K	0.03 °/K	≤ 200 Ω	1	1
B2N60H-Q20L60-2LI2-H1151/S97	**1534046**	±60°	< 0.14°	±0.5°	±15°	≤ ±0.025 °/K	0.03 °/K	≤ 200 Ω	1	1
B2N85H-Q20L60-2LI2-H1151	**1534032**	±85°	< 0.14°	±0.5°	±15°	≤ ±0.025 °/K	0.03 °/K	≤ 200 Ω	1	1
Dual Axis – Analog Output, 0.1–4.9 V										
B2N10H-Q20L60-2LU3-H1151	**1534006**	±10°	< 0.04°	±0.3°	±5°	≤ ±0.05 °/K	0.01 °/K	≥ 40 kΩ	1	1
B2N45H-Q20L60-2LU3-H1151	**1534007**	±45°	< 0.1°	±0.5°	±15°	≤ ±0.025 °/K	0.03 °/K	≥ 40 kΩ	1	1
B2N45H-Q20L60-2LU3-H1151/S97	**1534039**	±45°	< 0.1°	±0.5°	±15°	≤ ±0.025 °/K	0.03 °/K	≥ 40 kΩ	1	1
B2N60H-Q20L60-2LU3-H1151	**1534008**	±60°	< 0.14°	±0.5°	±15°	≤ ±0.025 °/K	0.03 °/K	≥ 40 kΩ	1	1
B2N60H-Q20L60-2LU3/S97	**1534060**	±60°	< 0.14°	±0.5°	±15°	≤ ±0.025 °/K	0.03 °/K	≥ 40 kΩ	1	1
B2N85H-Q20L60-2LU3-H1151	**1534027**	±85°	< 0.14°	±0.5°	±15°	≤ ±0.025 °/K	0.03 °/K	≥ 40 kΩ	1	1
B2N85H-Q20L60-2LU3/S97	**1534040**	±85°	< 0.14°	±0.5°	±15°	≤ ±0.025 °/K	0.03 °/K	≥ 40 kΩ	1	1
Dual Axis – Analog Output, Ratiometric 0.1-4.9 V @ 5 VDC										
B2N10H-Q20L60-2LU5-H1151	**1534009**	±10°	< 0.04°	±0.3°	±5°	≤ ±0.05 °/K	0.01 °/K	≥ 40 kΩ	1	1
B2N45H-Q20L60-2LU5-H1151	**1534010**	±45°	< 0.1°	±0.5°	±15°	≤ ±0.025 °/K	0.03 °/K	≥ 40 kΩ	1	1
B2N60H-Q20L60-2LU5-H1151	**1534011**	±60°	< 0.14°	±0.5°	±15°	≤ ±0.025 °/K	0.03 °/K	≥ 40 kΩ	1	1
B2N85H-Q20L60-2LU5-H1151	**1534042**	±85°	< 0.14°	±0.5°	±15°	≤ ±0.025 °/K	0.03 °/K	≥ 40 kΩ	1	1

Technical Specifications – Q20L60:

Voltage:	10-30 VDC / Ratiometric: 4.75-5.25 VDC
Protection:	IP68
Operating temperature:	-30 to +70 °C (-22 to +158 °F)
/S97 Option:	-40 to +70 °C (-40 to +158 °F)
Housing:	Polycarbonate
Shock resistance:	30 g (11 ms)
Vibration:	55 Hz (1 mm)
Repeatability:	≤ 0.2% of measuring range |A-B| ≤ 0.1% after warm-up time of 0.5 h

Technical Specifications – Q42:

Voltage:	10-30 VDC
Protection:	IP68
Operating temperature:	-40 to +70 °C (-40 to +158 °F)
Housing:	PA12
Shock resistance:	30 g (11 ms)
Vibration:	55 Hz (1 mm)
Max. linear deviation:	±0.2° (10° or 360°) / ±0.3°(45°) / ±0.4°(60°)
Baud rate:	10 kBit/s to 1 MBit/s
Interface:	CANopen

We reserve the right to make technical alterations without prior notice.

Turck Inc. | 3000 Campus Drive, Minneapolis, MN 55441 | T +1 800 544 7769 | F +1 763 553 0708 | www.turck.com

Inclinometers

Single Axis 360° with Analog Output

When a larger range is required or only one axis is necessary, the single axis 360° inclinometer has an adjustable measuring range and allows for programming a specified span within the 360°. The teach function is simple and can be done in seconds. In addition, this version comes with two outputs in one device. The first output increases with clockwise rotation (CW). The second output increases with counter-clockwise rotation (CCW).



- Measuring range is adjustable via teach adapter VB2-SP4
- Current 4-20 mA output
- Voltage 0.1-4.9 V output
- Vertical mount only
- Factory default is 1° to 360°
- FM Class I, Div 2 approved when used with Guard-Q20L60 and approved cordset.

Single Axis 360° with Two Discrete Switchpoints

This version has dual discrete outputs that are programmable as either normally open or normally closed with an adjustable span within the full angular range 0° to 360°.



- Two switchpoints (PNP, N.O. or N.C.), hysteresis, and span are all adjustable with teach adapter VB2-SP5
- Switch state indication by LEDs

Single and Dual Axis with CANopen Interface

A standard CANopen interface according to CiA DS-301/CiA DSP-410. All measured values and parameters are accessible via the object directory (OD).



- Transmit data object (TPDO1) with four operating modes
- Service-data object (Standard-SDO)
- Error message via emergency object
- Monitoring functions Heartbeat as well as Nodeguarding/Lifeguarding
- Memory and recovery function of all parameters
- Indication of status and error via two-color LED
- Setting of node ID as well as baud rate via object dictionary
- Freely configurable limit frequency (digital filter)
- Configuration of the minimal change of angle for TPDO1 send event
- Optional monitoring of internal device temperature

Part Number	ID Number	Angular Range	Resolution	Absolute Accuracy	Zero Point Calibration	Temperature Drift	Temperature Coefficient	Load Resistance	Dimensional Drawing	Wiring Diagram
Single Axis 360° – Analog Output, Adjustable Measuring Range 4–20 mA										
B1N360V-Q20L60-2LI2-H1151	**1534068**	360°	< 0.14°	±0.5°	N/A	N/A	0.03 °/K	≤ 200 Ω	1	2
Single Axis 360° – Analog Output, Adjustable Measuring Range 0.1–4.9 V										
B1N360V-Q20L60-2LU3-H1151	**1534069**	360°	< 0.14°	±0.5°	N/A	N/A	0.03 °/K	≤ 40 kΩ	1	2
Single Axis 360° – Digital Output, PNP, N.O./N.C. Programmable, Adjustable Switchpoints										
B1N360V-Q20L60-2UP6X3-H1151	**1534051**	360°	< 0.14°	±0.5°	N/A	≤ ±0.03° K	0.03 °/K	≤ 500 mA	1	3
Single Axis – CANopen Interface										
B1N360V-Q42-CNX2-2H1150	**1534065**	360°	< 0.01°	±0.1°	N/A	N/A	0.008 °/K	N/A	2	4
Dual Axis – CANopen Interface										
B2N10H-Q42-CNX2-2H1150	**1534061**	±10°	≤ 0.05°	±0.1°	N/A	N/A	0.008 °/K	N/A	2	4
B2N45H-Q42-CNX2-2H1150	**1534062**	±45°	≤ 0.1°	±0.1°	N/A	N/A	0.008 °/K	N/A	2	4
B2N60H-Q42-CNX2-2H1150	**1534063**	±60°	≤ 0.1°	±0.1°	N/A	N/A	0.008 °/K	N/A	2	4

We reserve the right to make technical alterations without prior notice.

Inclinometers

Dimensional Drawings

1

Q20L60 Housing

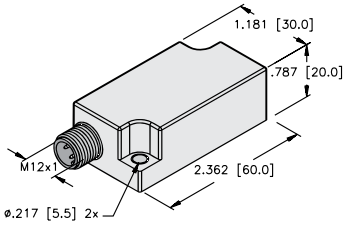

2

Q42 Housing – CANopen Interface

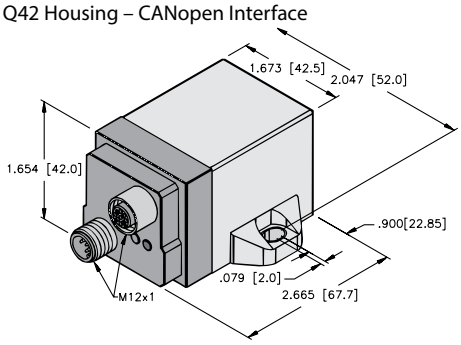

Wiring Diagrams

Diagram 1

5-pin M12 Eurofast Connection

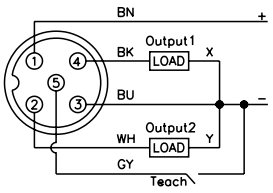

Mating Cordset: **RK 4.5T-*/S618**
Teaching Adapter: **VB2-SP4**

Diagram 2

5-pin M12 Eurofast Connection

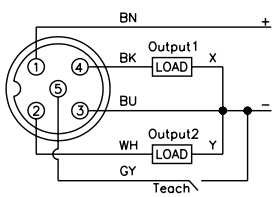

Mating Cordset: **RK 4.5T-*/S618**
Teaching Adapter: **VB2-SP4**

Diagram 3

5-pin M12 Eurofast Connection

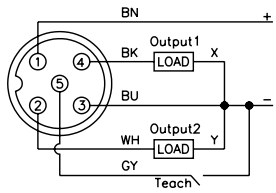

Mating Cordset: **RK 4.5T-*/S618**
Teaching Adapter: **VB2-SP5**

Diagram 4

5-pin M12 Eurofast Connection

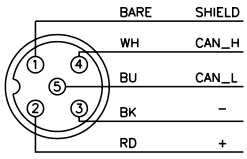

Male

Mating Cordset: **RKC 572-*M**

5-pin M12 Eurofast Connection

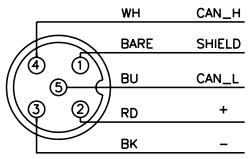

Female

Mating Cordset: **RSC 572-*M**

* Length in meters. Standard cable lengths are 2, 5, 10 and 15 m. Consult factory for other lengths.

Accessories

Guard - Q20L60, required for use with an inclinometer to maintain FM approval in a Class I, Div 2 environment

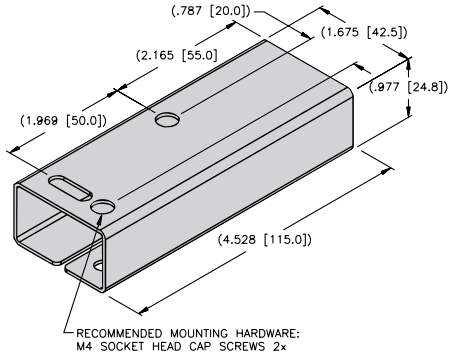



Wiring Diagram

5-pin M12 Eurofast Connection

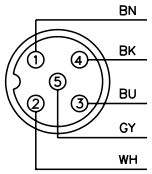

Mating Cordset: **P-RKG 5.64T-1877-***
Recommended mating cordset for use in FM Class I, Div 2 environment

We reserve the right to make technical alterations without prior notice.

ROTARY POSITION TECHNOLOGY – INDUCTIVE

SERIES	PAGE
General Information	**D2**
Q14	**D3**
QR20	**D5**
QR14/QR20 Accessories	**D7**
QR24	
Analog	**D8**
Incremental	**D9**
IO-Link	**D10**
SSI	**D11**
CANopen	**D12**
QR24 Accessories	**D13**
DSU35	**D15**

We reserve the right to make technical alterations without prior notice.

Rotary Inductive Sensors

What is a rotary inductive sensor?



Turck's rotary inductive analog sensor operation is based on the RLC (Resistance Inductive Capacitance) principle and incorporates an advanced microprocessor and precisely positioned emitter and receiver coils on a printed circuit board.

The emitter coils are excited with a high frequency AC field. The interaction between the moving position element and the receiver coils creates different voltages that are induced into the receiver coils which determines the position of the target.

The tuned positioning element can be mounted in a number of ways, but because it is contactless, there is no wear to the sensor or to the positioning element. Irregular rotating shafts can cause vibration and offset of the positioning element. Because of the contactless arrangement of the sensor and positioning element, there is a ≤ 3mm compensation of lateral offset. The absence of a shaft and bearing enables easy adaptation to many applications.

Where can I use a rotary inductive sensor?

The rotary inductive sensor can be used in a variety of applications and industries.

- Mobile equipment: Detection of the boom angle, platform rotation and ladder position.
- Solar panel tracking and wind turbine blade pitch.
- Commercial: Gate or door position on trains and buses.

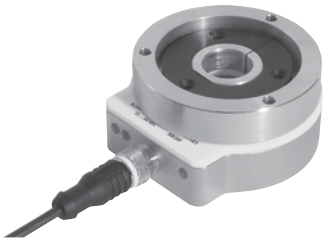

Why choose Turck rotary inductive sensors?

High noise immunity
As a result of the RLC circuit. All products meet IEC 605529 and EN 60529 standard for noise immunity. The sensor is also inherently weld field immune.

High linearity and precision
The new rotary inductive sensors provide high precision measurement and a repeatability of 0.09° with a measuring range of 360°. Bearing tolerances are eliminated through the contactless design as well as vibration caused by irregular rotating shafts, guaranteeing high linearity.

Robust housing
Made of high quality plastic. The IP67 rated sensor protects the sensor from most chemicals and oils. It is also shock and vibration resistant up to 30 g (11 ms) and 55 Hz (1 mm displacement).



Analog or digital outputs
The standard units feature analog outputs 0-10 V and 4-20 mA with operating voltage of 15-30 VDC or 0.5-4.5 V with operating voltage of 8-30 VDC. All standard units have 12 bit resolution. Operating temperatures available are -25 to +70 °C or -40 to +70 °C. Enhanced units feature SSI output with operating voltage of 15-30 VDC and 16 bit resolution. Versions with incremental outputs can be used in place of optical encoders in counting applications.

We reserve the right to make technical alterations without prior notice.

Turck Inc. | 3000 Campus Drive, Minneapolis, MN 55441 | T +1 800 544 7769 | F +1 763 553 0708 | www.turck.com

Rotary Inductive Sensors, Analog Output, QR14

Part Number	ID Number	Measuring Range	Resolution (12 bit)	Ambient Temperature	Operating Voltage	Voltage Output	Current Output	Dimensional Drawing	Wiring Diagram
Ri360P2-QR14-ELiU5X2*	1590857	0-360°	≤ 0.09°	-13 to +158 °F (-25 to +70 °C)	15-30 VDC	0-10 V	4-20 mA	1	1
Ri360P2-QR14-ELU4X2/S97	1590858	0-360°	≤ 0.09°	-40 to +158 °F (-40 to +70 °C)	8-30 VDC	0.5-4.5 V	N/A	1	2
Ri360P2-QR14-ELiU5X2-0.3-RS5*	1590859	0-360°	≤ 0.09°	-13 to +158 °F (-25 to +70 °C)	15-30 VDC	0-10 V	4-20 mA	2	3

*P2 of part number indicates position element P2-Ri-QR14 included in delivery

Technical Specifications:

Measuring Principle:	inductive, absolute singleturn
Nominal distance:	1.5 mm
Repeat accuracy:	≤0.025% of full scale
Nominal distance	1.5 mm
Linearity deviation:	≤ 0.3% f.s.
Temperature drift:	≤ ±0.01% / K
Lateral offset:	≤ 3 mm
Residual ripple:	≤ 10% Upp
Isolation test voltage:	≤ 0.5 kV
Short-circuit protection:	yes
Wire-break/Rev. pol. protection:	yes/yes (supply voltage)
Load resistance voltage:	≥ 4.7 kΩ
Load resistance current output:	≤ 0.4 kΩ
Sampling rate:	800 Hz
Current consumption:	< 100 mA

Housing:	rectangular, QR14
Dimensions:	53.5 x 49 x 14 mm
Housing material:	plastic, PBT-GF30-V0
Electrical connection:	cable/connector
Vibration resistance (EN 60068-2-6):	20 g, 10-3000 Hz, 50 cycles, 3 axes
Shock resistance (EN 60068-2-27):	100 g, 11 ms 1/2 sine, 3x each, 3 axes
Continuous Shock resistance (EN60068-2-29):	40 g, 6 ms 1/2 sine, 4000x each, 3 axes
Degree of protection:	IP68/IP69K
Power-on indication:	LED, green
Measuring range indication:	multifunction LED, green , green flashing

Dimensions:

1

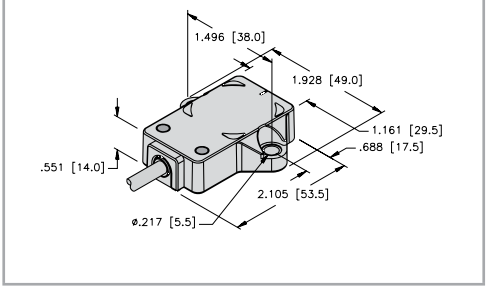

2

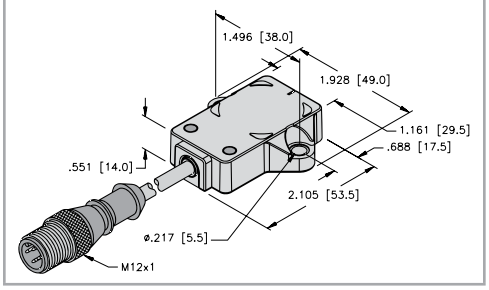

Wiring Diagrams:

Diagram 1

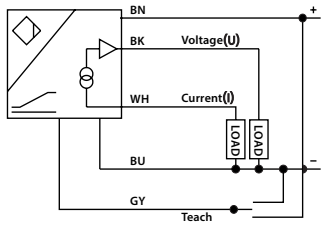

Diagram 2

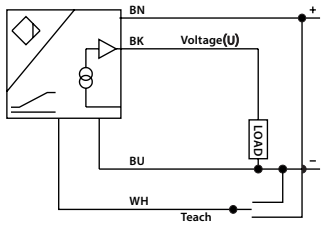

Diagram 3

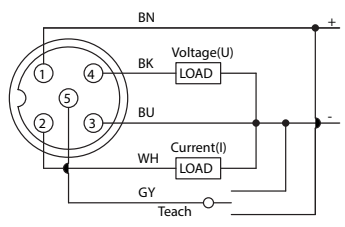

Mating Cordset: **RK 4.5T-*/S618**

* Length in meters.

We reserve the right to make technical alterations without prior notice.

Rotary Inductive Sensors, SSI Output, QR14

Part Number	ID Number	Measuring Range	Resolution (16bit)	Ambient Temperature	Operating Voltage	Function Output	Dimensional Drawing	Wiring Diagram
Ri360P2-QR14-ESG25X2*	1590827	0-360°	≤ 0.006°	-13 to +158 °F (-25 to +70 °C)	15-30 VDC	SSI	1	1
Ri360P2-QR14-ESG25X2-0.3-RS8*	1590826	0-360°	≤ 0.006°	-13 to +158 °F (-25 to +70 °C)	15-30 VDC	SSI	2	2

*P2 of part number indicates position element P2-Ri-QR14 included in delivery

Technical Specifications:

Measuring Principle:	inductive, absolute singleturn
Nominal distance:	1.5 mm
Repeat accuracy:	≤0.025% of full scale
Linearity deviation:	≤ 0.3% of full scale
Temperature drift:	≤ ±0.001% / K
Lateral offset:	≤ 3 mm
Residual ripple:	≤ 10% Uss
Isolation test voltage:	≤ 0.5 kV
Short-circuit protection:	yes
Wire-break/Rev. pol. protection:	yes/yes (supply voltage)
Output function:	8-wire, SSI, 25 bit, gray coded
Process data area:	Bit 0 to Bit 15
Diagnostic bits:	Bit 22: Positioning element is in measuring range, lower signal quality (e.g., distance too large) Bit 23: Positioning element is outside measuring range

Sampling rate:	500 Hz
Power consumption:	< 100 mA
Housing:	rectangular, QR14
Dimensions:	53.5 x 49 x 14 mm
Housing material:	plastic, PBT-GF30-V0
Electrical connection:	cable/cable with connection
Vibration resistance:	55 Hz (1 mm)
Vibration resistance (EN 60068-2-6):	20 g, 10-3000 Hz, 50 cycles, 3 axes
Shock resistance (EN 60068-2-27):	100 g, 11 ms 1/2 sine, 3x each, 3 axes
Continuous Shock resistance (EN60068-2-29):	40 g, 6 ms 1/2 sine, 4000x each, 3 axes
Degree of protection:	IP68/IP69K
Power-on indication:	LED, green
Measuring range indication:	multifunction LED, green,green flashing

Dimensions:

1

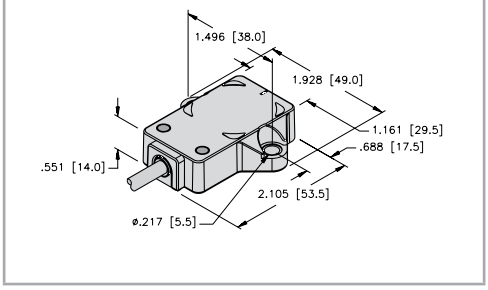

2

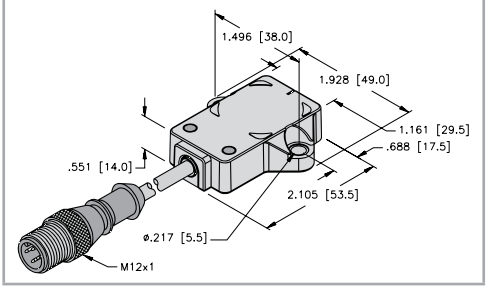

Wiring Diagrams:

Diagram 1

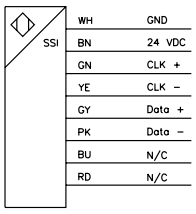

Diagram 2

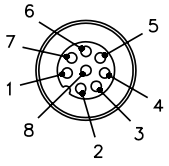

Pinouts
1. GND(WH)
2. 24 VDC(BN)
3. CLK +(GN)
4. CLK -(YE)
5. DATA +(GY)
6. DATA -(PK)
7. N/C(BU)
8. N/C(RD)

Mating Cordset: **E-RKC 8T-264-***

We reserve the right to make technical alterations without prior notice.

Turck Inc. | 3000 Campus Drive, Minneapolis, MN 55441 | T +1 800 544 7769 | F +1 763 553 0708 | www.turck.com

Rotary Inductive Sensors, Analog Output, QR20





Technical Specifications:

Measuring Principle:	inductive, absolute singleturn
Nominal distance:	1 mm
Resolution:	0.09°
Repeat Accuracy:	≤0.09°
Linearity Deviation:	≤1.08°
Temperature Drift:	≤±0.01 %/K
Output type:	analog
Operating Voltage:	LU4: 8-30 VDC
Residual Ripple:	≤ 10% U_{ss}
Isolation Test Voltage:	≤0.5 kV
Short-circuit protection:	yes
Wire-break/Rev. pol. protection:	no/yes (supply voltage)
Load Resistance:	LU4: ≥4.7kΩ
Sampling rate:	800 Hz
Load dump protection (DIN ISO 7637-2):	severity degree IV/Level 4
Current Consumption:	<100 mA

Housing:	rectangular, QR20
Dimensions:	71.3 x 64 x 20 mm
Housing material:	plastic, Ultem
Electrical connection:	cable/connector
Vibration resistance:	55 Hz (1 mm)
Vibration resistance (EN 60068-2-6):	20 g, 10-3000 Hz, 50 cycles, 3 axes
Shock resistance (EN 60068-2-27):	100 g, 11 ms 1/2 sine, 3x each, 3 axes
Continuous Shock resistance (EN60068-2-29):	40 g, 6 ms 1/2 sine, 4000x each, 3 axes
Salt Spray Test (EN 60068-2-52):	severity degree 5 (4 test cycles)
Degree of protection:	IP68/IP69K
Ambient temperature:	-40 to +185 °F (-40 to +85 °C)
Storage temperature:	-40 to +257 °F (-40 to +125 °C)
Temperature change (EN60068-2-14):	-40 to +185 °F (-40 to +85 °C)
Measuring range indication:	multifunction LED, green, green flashing
Diagnostic:	positioning element not detected: Output signal 5 V

Part Number Key: QR20

A	B	C		D		E		F
RI	20	P1	-	QR20	-	LU4X2	-	BLANK

A	Type
RI	Rotary Inductive

B	Measuring Range
20	20° Measurement
40	40° Measurement
60	60° Measurement
90	90° Measurement
120	120° Measurement
240	240° Measurement
360	360° Measurement

C	Positioning Element (Included in Delivery)
P1	QR20 Element w/ 6 mm shaft opening
P2	QR20 Element w/ 1/4" shaft opening

D	Housing
QR20	Rectangular, 20 mm

E	Voltage Supply and Output Type
LU4X2	8-30 VDC, 0.5-4.5 V

F	Type of Connection
BLANK	Cable (2 m TPE)
H1141	4-pin M12 Eurofast Connector
0.15-DT04-3PMB	3-pin Deutsch Pigtail (0.15 m TPE)
0.24-AMP01-3P	3-pin AMP Pigtail (0.24 m TPE)

We reserve the right to make technical alterations without prior notice.

Rotary Inductive Sensors, Analog Output, QR20

Dimensions:

1

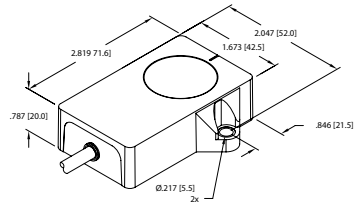

2

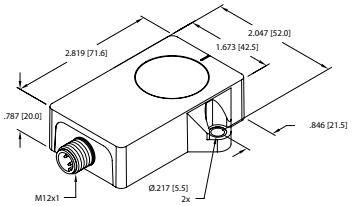

3

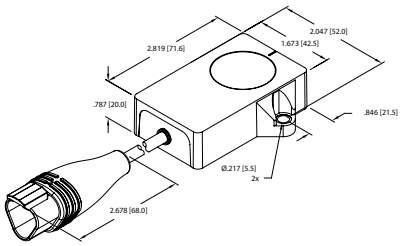

4

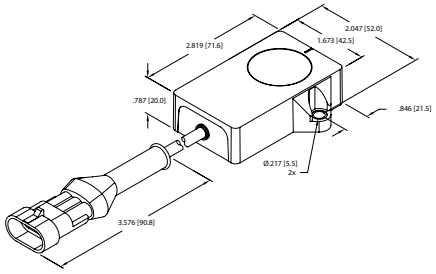

Wiring Diagrams:

Diagram 1

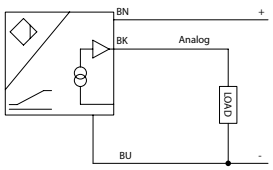

Diagram 2

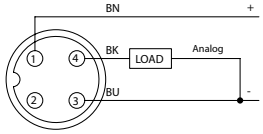

Mating Cordset: RK 4T-*/S618

* Length in meters.

Diagram 3

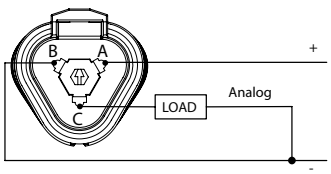

Mating Cordset: DT06-3S-1876-*M

* Length in meters.

Diagram 4

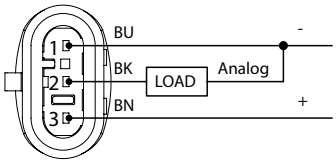

Mating Cordset: TSS-3P-A-*/TXL

* Length in meters.

We reserve the right to make technical alterations without prior notice.

Turck Inc. | 3000 Campus Drive, Minneapolis, MN 55441 | T +1 800 544 7769 | F +1 763 553 0708 | www.turck.com

Rotary Inductive Sensors – Accessories, QR20/QR14

Positioning Element

P1-Ri-QR20

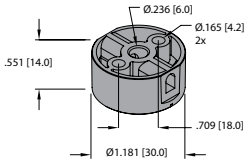

Positioning element, operating at a distance of 0-5 mm to the sensor surface. Nominal distance is 1 mm.

Positioning Element

P2-Ri-QR20

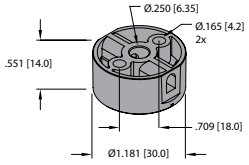

Positioning element, operating at a distance of 0-5 mm to the sensor surface. Nominal distance is 1 mm.

Positioning Element

P1-Ri-QR14

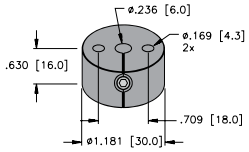

Positioning element, operating at a distance of 0-5 mm to the sensor surface. Nominal distance is 1.5 mm.

Positioning Element

P2-Ri-QR14

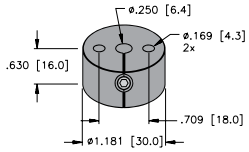

Positioning element, operating at a distance of 0-5 mm to the sensor surface. Nominal distance is 1.5 mm.

Spacer Sleeve

DS-Ri-QR14

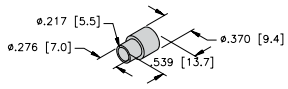

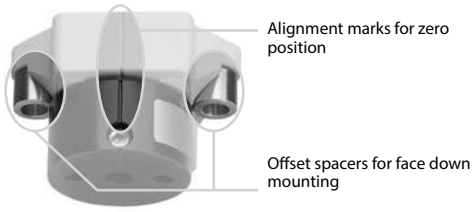

Spacer sleeve for overhead mounting

We reserve the right to make technical alterations without prior notice.

Rotary Inductive Sensors, Analog Output, QR24

Part Number	ID Number	Measuring Range	Resolution (16bit)	Ambient Temperature	Operating Voltage	Voltage Output	Current Output	Dimensional Drawing	Wiring Diagram
Ri360P0-QR24M0-ELIU5X2-H1151	1590908	0-360°	≤ 0.006°	-13 to +185 °F (-25 to +85 °C)	15-30 VDC	0-10 V [1)]	4 - 20 mA [2)]	1	1
Ri360P0-EQR24M0-ELIU5X2-H1151	1590977	0-360°	≤ 0.006°	-13 to +185 °F (-25 to +85 °C)	15-30 VDC	0-10 V [1)]	4 - 20 mA [2)]	1	1

[1)] Programmable to other outputs: 0-5 V or 0.5-4.5 V
[2)] Programmable to 0-20 mA

Technical Specifications:

Measuring Principle:	inductive, absolute singleturn
Nominal distance:	1.5 mm
Repeat accuracy:	≤0.01% of full scale
Linearity deviation:	≤ 0.05% of full scale
Temperature drift:	≤ ±0.004% / K
Residual ripple:	≤ 10% Uss
Isolation test voltage:	≤ 0.5 kV
Short-circuit protection:	yes
Wire-break/Rev. pol. protection:	yes/yes (supply voltage)
Load resistance (voltage):	≥ 4.7 kΩ
Load resistance (current):	≤ 0.4 kΩ
Sampling rate:	5000 Hz
Current consumption:	< 50 mA

Housing:	QR24
Dimensions:	81 x 78 x 24 mm
Housing material (QR24):	metal/plastic, ZnAlCu1/PBT-GF30-V0
Housing material (EQR24):	stainless steel/plastic V4A (1.4404) PA12-GF30
Shaft type:	hollow shaft
Electrical connection:	M12 x 1
Vibration resistance:	55 Hz (1 mm)
Vibration resistance (EN 60068-2-6):	20 g, 10-3000 Hz, 50 cycles, 3 axes
Shock resistance (EN 60068-2-27):	100 g, 11 ms 1/2 sine, 3x each, 3 axes
Continuous Shock resistance (EN60068-2-29):	40 g, 6 ms 1/2 sine, 4000x each, 3 axes
Degree of protection:	IP68/IP69K
Power-on indication:	LED, green
Measuring range indication:	LED, yellow, yellow flashing

Dimensions:

1

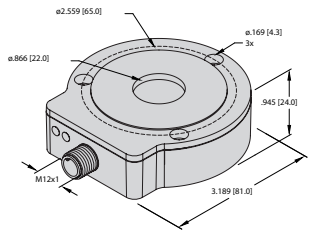

Wiring Diagrams:

Diagram 1

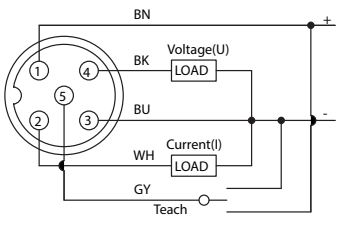

Mating Cordset: **RK 4.5T-*/S618**

* Length in meters.

Diagram 2

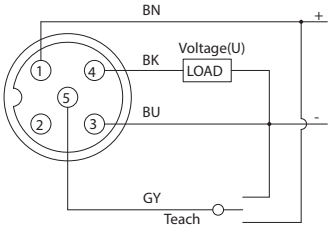

Mating Cordset: **RK 4.5T-*/S618**

* Length in meters.

We reserve the right to make technical alterations without prior notice.

Rotary Inductive Sensors, Incremental Output, QR24

Part Number	ID Number	Measuring Range	Resolution	Ambient Temperature	Operating Voltage	Output	Dimensional Drawing	Wiring Diagram
Ri360P0-QR24M0-INCRX2-H1181	1590910	0-360°	1-5000* ppr	-13 to +185 °F (-25 to +85 °C)	10-30 VDC	Push-Pull/HTL	1	1
Ri360P0-EQR24M0-INCRX2-H1181	1590912	0-360°	1-5000* ppr	-13 to +185 °F (-25 to +85 °C)	10-30 VDC	Push-Pull/HTL	1	1

NOTE: Incremental output QR24 sensors not to be used for speed feedback.

* Easyteach pulse rates available: 360, 512, 1000, 1024, 2048, 2500, 3600, 4096, 5000 ppr

Technical Specifications:

Measuring Principle:	inductive, incremental
Nominal distance:	1.5 mm
Repeat accuracy:	≤0.01% of full scale
Linearity deviation:	≤ 0.05% of full scale
Temperature drift:	≤ ±0.003% / K
Residual ripple:	≤ 10% Uss
Isolation test voltage:	≤ 0.5 kV
Short-circuit protection:	yes (cyclic)
Wire-break/Rev. pol. protection:	yes/yes (supply voltage)
Pulse frequency max.:	200 kHz
Signal level high:	min. V+ - 2V
Signal level low:	max. 2V
Sampling rate:	1000 Hz
Current consumption:	< 100 mA

Housing:	QR24
Dimensions:	81 x 78 x 24 mm
Housing material (QR24):	metal/plastic, ZnAlCu1/PBT-GF30-V0
Housing material (EQR24):	stainless steel/plastic V4A (1.4404) PA12-GF30
Shaft type:	hollow shaft
Electrical connection:	M12 x 1
Vibration resistance:	55 Hz (1 mm)
Vibration resistance (EN 60068-2-6):	20 g, 10-3000 Hz, 50 cycles, 3 axes
Shock resistance (EN 60068-2-27):	100 g, 11 ms 1/2 sine, 3x each, 3 axes
Continuous Shock resistance (EN60068-2-29):	40 g, 6 ms 1/2 sine, 4000x each, 3 axes
Degree of protection:	IP68/IP69K
Power-on indication:	LED, green
Measuring range indication:	LED, yellow, yellow flashing

Dimensions:

1

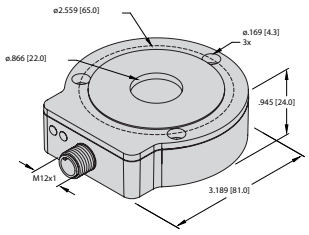

Easyteach Programming Tool:

TX2-Q20L60

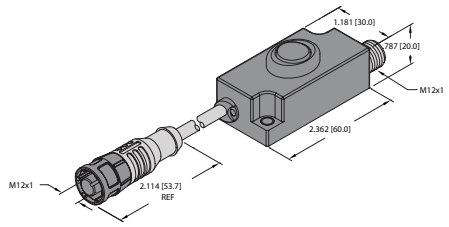

Wiring Diagrams:

Diagram 1

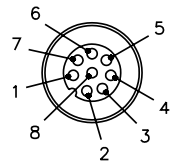

Pinouts
1. GND(WH)
2. 24 VDC(BN)
3. A(GN)
4. $\overline{A}$(YE)
5. B(GY)
6. $\overline{B}$(PK)
7. Z(BU)
8. TEACH(RD)

Mating Cordset: **E-RKC 8T-264-***

Sample Configuration: IO-Link Master

The following components can be used for parameterization of the QR24 incremental sensor through IO-Link:

1 x IO-Link Master	USB-2-IOL-0002
1 x Connection Cable	RK 8T-2-RS 4T/S90/S3501

PACTware

We reserve the right to make technical alterations without prior notice.

Rotary Inductive Sensors, IO-Link, QR24

Part Number	ID Number	Measuring Range	Resolution (16bit)	Ambient Temperature	Operating Voltage	IO-Link Data Telegram	Dimensional Drawing	Wiring Diagram
Ri360P0-QR24M0-IOLX2-H1141	1590975	0-360°	≤ 0.006°	-13 to +185 °F (-25 to +85 °C)	15-30 VDC	32-bit	1	1
Ri360P0-EQR24M0-IOLX2-H1141	1590978	0-360°	≤ 0.006°	-13 to +185 °F (-25 to +85 °C)	15-30 VDC	32-bit	1	1

Technical Specifications:

Measuring principle:	inductive, absolute semi-multiturn
Nominal distance:	1.5 mm
Repeat accuracy	≤ 0.01% of full scale
Linearity deviation:	≤ 0.05% of full scale
Temperature drift:	≤ ±0.003%/K
Residual ripple:	≤ 10% Uss
Isolation test voltage:	≤ 0.5 kV
Wire-break/Rev. pol. protection:	yes/yes (supply voltage)
IO-Link Specification:	Version 1.1
IO-Link Telegram	16-bit single-turn 13-bit multiturn, 3 error bits
Sampling rate:	1000 Hz
Current consumption:	<50 mA
Programming:	FDT/DTM
Communication mode:	COM 2 (38.4 kBaud)
Minimum cycle time:	3 ms
Function Pin 4:	IO-Link
Included in the SIDI GSDML:	Yes

Housing:	QR24
Dimensions:	81 x 78 x 24 mm
Housing material (QR24):	metal/plastic, ZnAlCu1/PBT-GF30-V0
Housing material (EQR24):	stainless steel/plastic V4A (1.4404) PA12-GF30
Shaft type:	hollow shaft
Electrical connection:	M12 x 1
Vibration resistance:	55 Hz (1 mm)
Vibration resistance (EN 60068-2-6):	20 g, 10-3000 Hz, 50 cycles, 3 axes
Shock resistance (EN 60068-2-27):	100 g, 11 ms 1/2 sine, 3x each, 3 axes
Continuous Shock resistance (EN60068-2-29):	40 g, 6 ms 1/2 sine, 4000x each, 3 axes
Degree of protection:	IP68/IP69K
Power-on indication:	LED, green
Measuring range indication:	LED, yellow, yellow flashing

We reserve the right to make technical alterations without prior notice.

Dimensions:

1

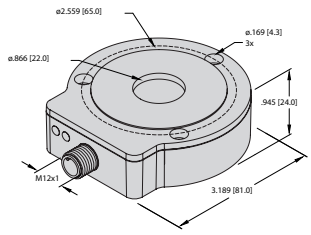

Wiring Diagrams:

Diagram 1

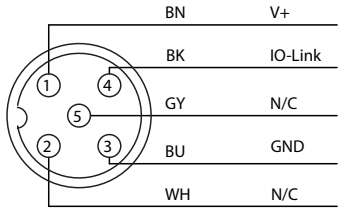

Mating Cordset: **RK 4T-***

* Length in meters.

Turck Inc. | 3000 Campus Drive, Minneapolis, MN 55441 | T +1 800 544 7769 | F +1 763 553 0708 | www.turck.com

Rotary Inductive Sensors, SSI Output, QR24

Part Number	ID Number	Measuring Range	Resolution (16-bit)	Ambient Temperature	Operating Voltage	Output Function	Dimensional Drawing	Wiring Diagram
Ri360P0-QR24M0-HESG25X3-H1181	1590905	0-360°	≤ 0.006°	-13 to +185 °F (-25 to +85 °C)	15-30 VDC	SSI	1	1
Ri360P0-EQR24M0-HESG25X3-H1181	1590911	0-360°	≤ 0.006°	-13 to +185 °F (-25 to +85 °C)	15-30 VDC	SSI	1	1

Technical Specifications:

Measuring Principle:	inductive, absolute semi-multiturn
Nominal distance:	1.5 mm
Repeat accuracy:	≤ 0.01% of full scale
Linearity deviation:	≤ 0.05% of full scale
Temperature drift:	≤ ±0.003% / K
Residual ripple:	≤ 10% Uss
Isolation test voltage:	≤ 0.5 kV
Wire-break/Rev. pol. protection:	yes/yes (supply voltage)
Output function:	8-wire, SSI, 25 bit, gray coded
Process data area:	Configurable
Resolution singleturn:	16 bit
Resolution multiturn:	6 Bit
Diagnostic bits:	Bit 22: Positioning was changed during power drop Bit 23: Positioning element has reached the end of the measuring range. This is indicted by a lower signal quality Bit 24: Positioning element is outside the measuring range. Data messages parameterizable as multiturn and singleturn process data or error bits

Sampling rate:	5000 Hz
Current consumption:	< 100 mA
Housing:	QR24
Dimensions:	81 x 78 x 24 mm
Housing material (QR24):	metal/plastic, ZnAlCu1/PBT-G30-V0
Housing material (EQR24):	stainless steel/plastic V4A (1.4404) PA12-GF30
Shaft type:	hollow shaft
Electrical connection:	M12 x 1
Vibration resistance:	55 Hz (1 mm)
Vibration resistance (EN 60068-2-6):	20 g, 10-3000 Hz, 50 cycles, 3 axes
Shock resistance (EN 60068-2-27):	100 g, 11 ms 1/2 sine, 3x each, 3 axes
Continuous Shock resistance (EN60068-2-29):	40 g, 6 ms 1/2 sine, 4000x each, 3 axes
Degree of protection:	IP68/IP69K
Power-on indication:	LED, green
Measuring range indication:	LED, yellow, yellow flashing
Error indication:	LED, red

We reserve the right to make technical alterations without prior notice.

Dimensions:

1

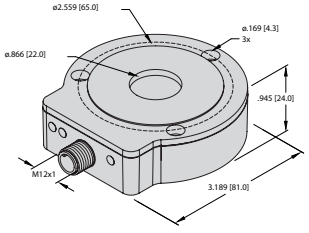

Wiring Diagrams:

Diagram 1

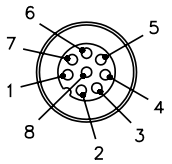

Pinouts
1. GND(WH)
2. 24 VDC(BN)
3. CLK +(GN)
4. CLK -(YE)
5. DATA +(GY)
6. DATA -(PK)
7. N/C(BU)
8. TEACH(RD)

Mating Cordset: **E-RKC 8T-264-***

Sample Configuration: IO-Link Master

The following components can be used for parameterization of the QR24 SSI sensor through IO-Link:

1 x IO-Link Master	USB-2-IOL-0002
1 x Connection Cable	RK 8T-2-RS 4T/S90/S3501



Rotary Inductive Sensors, CANopen Output, QR24

Part Number	ID Number	Measuring Range	Resolution (16-bit)	Ambient Temperature	Operating Voltage	Output Function	Dimensional Drawing	Wiring Diagram
Ri360P0-QR24M0-CNX4-2H1150	**1590914**	0-360°	≤ 0.006°	-13 to +185 °F (-25 to +85 °C)	10-30 VDC	CANopen, DS406 V3.4 LSS DS 305	1	1

Technical Specifications:

Measuring principle:	inductive, absolute semi-multiturn
Nominal distance:	1.5 mm
Repeat accuracy	≤ 0.01% of full scale
Linearity deviation:	≤ 0.05% of full scale
Temperature drift:	≤ ±0.003% / K
Residual ripple:	≤ 10% Uss
Isolation test voltage:	≤ 0.5 kV
Wire-break/Rev. pol. protection:	yes/yes (supply voltage)
Node ID:	1 - 127, factory default: 3
Baud rate:	10, 20, 50, 125, 250, 500, & 800 kbps factory default: 125 kbps
Sampling rate:	800 Hz
Current consumption:	< 60 mA

Housing:	QR24
Dimensions:	81 x 78 x 24 mm
Housing material:	metal/plastic, ZnAlCu1/PBT-GF30-V0
Shaft type:	hollow shaft
Electrical connection:	2 x M12 x 1
Vibration resistance:	55 Hz (1 mm)
Vibration resistance (EN 60068-2-6):	20 g, 10-3000 Hz, 50 cycles, 3 axes
Shock resistance (EN 60068-2-27):	100 g, 11 ms 1/2 sine, 3x each, 3 axes
Continuous Shock resistance (EN60068-2-29):	40 g, 6 ms 1/2 sine, 4000x each, 3 axes
Degree of protection:	IP68/IP69K
Power-on indication:	LED, green
Measuring range indication:	LED, yellow, yellow flashing
Status CANopen:	LED, green/red

Dimensions:

1

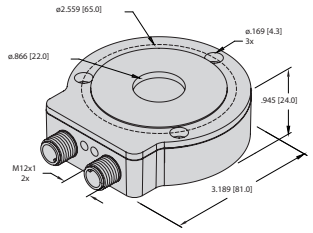

Wiring Diagrams:

Diagram 1: Bus In

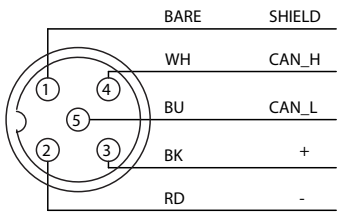

Mating Cordset: **RKC 572-*M**

* Length in meters.

Diagram 2: Bus Out

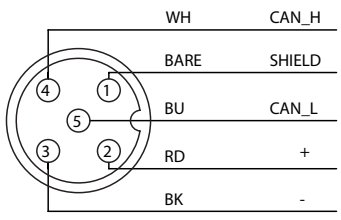

Mating Cordset: **RSC 572-*M**

* Length in meters.

We reserve the right to make technical alterations without prior notice.

Accessories, QR24

Reducing Bushings and Shaft Adapters

Dimension Drawing	Type	Description
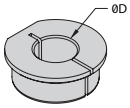	RA1-QR24 [1] (20 mm)	Reducing bushing 20 mm
	RA2-QR24 (14 mm)	Reducing bushing 14 mm
	RA3-QR24 [1] (12 mm)	Reducing bushing 12 mm
	RA4-QR24 [1] (10 mm)	Reducing bushing 10 mm
	RA5-QR24 (6 mm)	Reducing bushing 6 mm
	RA6-QR24 (3/8 in)	Reducing bushing 3/8"
	RA7-QR24 (1/4 in)	Reducing bushing 1/4"
	RA8-QR24 [1] (BP)	Blanking plug
	RA9-QR24 [1] (1/2 in)	Reducing bushing 1/2"
	RA10-QR24 [1] (5/8 in)	Reducing bushing 5/8"
	RA11-QR24 [1] (3/4 in)	Reducing bushing 3/4"

Dimension Drawing	Type	Description
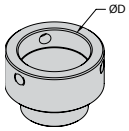	RAA6-QR24 (1 in)	Shaft Adapter 1"
	RAA7-QR24 (1 1/8 in)	Shaft Adapter 1 1/8"
	RAA8-QR24 (1 1/4 in)	Shaft Adapter 1 1/4"
	RAB1-QR24 (1 1/2 in)	Shaft Adapter 1 1/2"

Other shaft adapter sizes available upon request

Ready-to-Install Positioning Elements

Dimension Drawing	Type	Description
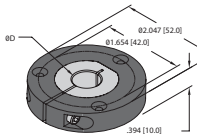	P1-Ri-QR24 [1] (20 mm)	Positioning element with hollow shaft 20 mm
	P2-Ri-QR24 (14 mm)	Positioning element with hollow shaft 14 mm
	P3-Ri-QR24 [1] (12 mm)	Positioning element with hollow shaft 12 mm
	P4-Ri-QR24 [1] (10 mm)	Positioning element with hollow shaft 10 mm
	P5-Ri-QR24 (6 mm)	Positioning element with hollow shaft 6 mm
	P6-Ri-QR24 (3/8 in)	Positioning element with hollow shaft 3/8"
	P7-Ri-QR24 (1/4 in)	Positioning element with hollow shaft 1/4"
	P8-Ri-QR24 [1] (BP)	Positioning element with blanking plug
	P9-Ri-QR24[1] (1/2 in)	Positioning element with hollow shaft 1/2"
	P10-Ri-QR24[1] (5/8 in)	Positioning element with hollow shaft 5/8"
	P11-Ri-QR24[1] (3/4 in)	Positioning element with hollow shaft 3/4"

[1] Items offered with stainless steel components (EQR24). Contact factory for more options.

Dimension Drawing	Type	Description
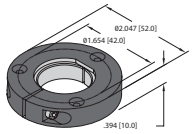	PE1-QR24 [1]	Base unit for positioning element

We reserve the right to make technical alterations without prior notice.

Accessories, QR24

Protection Ring and Shielding Plate

Dimension Drawing	Type	Description
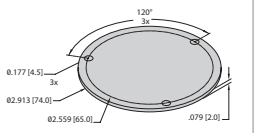	SP1-QR24	Shield Ø 74 mm, aluminium
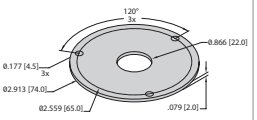	SP2-QR24	Shield Ø 74 mm with bore for shaft guidance, aluminium
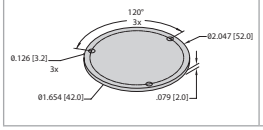	SP3-QR24	Shield Ø 52 mm, aluminium

Dimension Drawing	Type	Description
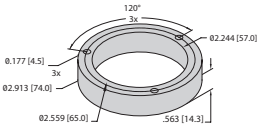	M1-QR24[2)]	Aluminium ring
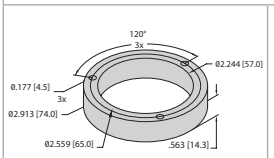 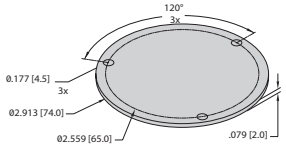	M2-QR24	M1-QR24+SP1-QR24
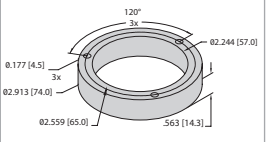 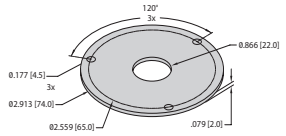	M3-QR24	M1-QR24+SP2-QR24
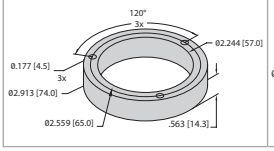 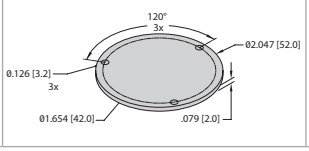	M4-QR24	M1-QR24+SP3-QR24

[2)] Also offered in plastic (M5-QR24).

Spacing Tool

Dimension Drawing	Type	Description
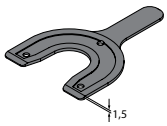	MT-QR24	Mounting aid, already included in the delivery scope of the sensor

We reserve the right to make technical alterations without prior notice.

Turck Inc. | 3000 Campus Drive, Minneapolis, MN 55441 | T +1 800 544 7769 | F +1 763 553 0708 | www.turck.com

Rotary Inductive Sensors, DSU35

Part Number	ID Number	Measuring Range	Resolution (12-bit)	Ambient Temperature	Operating Voltage	Output Function	Dimensional Drawing	Wiring Diagram
Ri360P1-DSU35-ELIU5X2-H1151*	**1590866**	0-360°	≤ 0.09°	-13 to +167 °F (-25 to +75 °C)	15-30 VDC	Analog 0-10 V/ 4-20 mA	1	1
Ri360P1-DSU35-2UP6X4-H1151*	**1590867**	0-360°	≤ 0.09°	-13 to +167 °F (-25 to +75 °C)	10-30 VDC	2 x NO/NC, PNP	1	2
Ri360P1-DSU35-ELIU5X2-B1150/S1265*	**1593040**	0-360°	≤ 0.09°	-13 to +167 °F (-25 to +75 °C)	15-30 VDC	Analog 0-10 V/ 4-20 mA	2	3
Ri360P1-DSU35TC-ELI-EXI*	**1593015**	0-360°	≤ 0.09°	-13 to +158 °F (-25 to +70 °C)	14-30 VDC	Analog 4-20 mA	3	4

*P1 of part number indicates P1-RI-DSU35 included in delivery

Technical Specifications:

Measuring principle:	inductive, absolute singleturn	Housing:	DSU35
Nominal distance:	1 mm	Hazardous approvals (EXI version only):	ATEX (Zone 1 & 21), IECEx
Repeat accuracy	≤ 0.025% of full scale	Housing materials:	plastic, PP-GF30
Temperature drift:	≤ ±0.02% / K	Electrical connection:	M12 x 1, 7/8" -20UNF, terminal chamber
Residual ripple:	≤ 10% Uss	Vibration resistance:	55 Hz (1 mm)
Isolation test voltage:	≤ 0.5 kV	Shock resistance:	30 g (11 ms)
Short-circuit protection:	yes	Degree of protection:	IP67
Wire-break/Rev. pol. protection:	yes/yes (supply voltage)	Power-on indication:	LED, green
Load Resistance (voltage):	≥ 4.7 kΩ	Measuring range indication:	LED, green, green flashing
Load Resistance (current):	≤ 0.7 kΩ	Error indication:	LED, yellow
Sampling rate:	500 Hz		
Current consumption:	< 100 mA		

Dimensions:

1

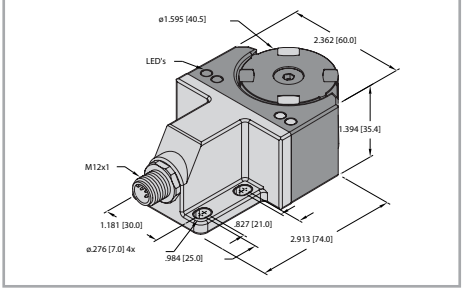

2

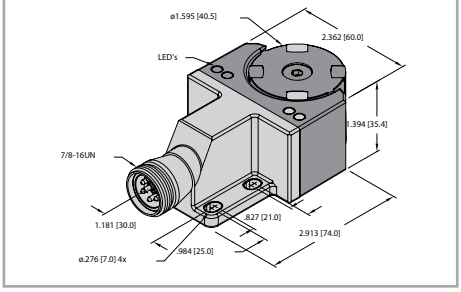

3

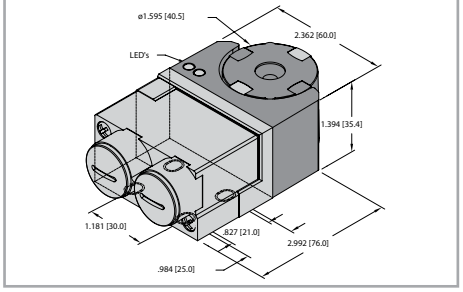

Wiring Diagrams:

Diagram 1

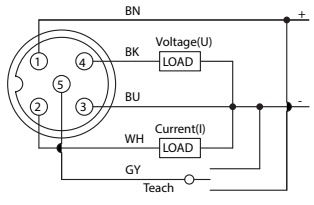

Mating Cordset: **RK 4.5T-*/S618**

* Length in meters.

Diagram 2

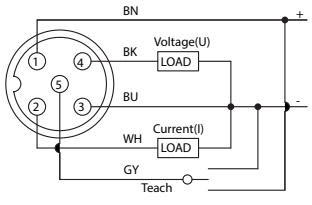

Mating Cordset: **RK 4.5T-***

* Length in meters.

Diagram 3

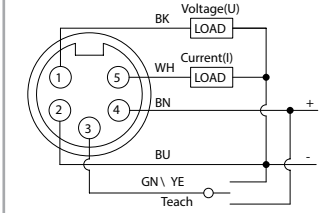

Mating Cordset: **RKM 50-*M**

* Length in meters.

Diagram 4

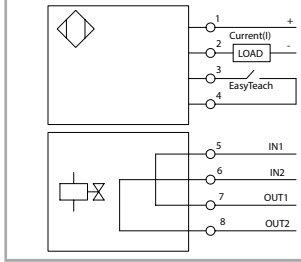

We reserve the right to make technical alterations without prior notice.

Notes:

We reserve the right to make technical alterations without prior notice.

Turck Inc. | 3000 Campus Drive, Minneapolis, MN 55441 | T +1 800 544 7769 | F +1 763 553 0708 | www.turck.com

ROTARY POSITION TECHNOLOGY
INCREMENTAL ENCODERS

Series	Type	Interface	Page
Miniature - Shaft/Hollow Shaft			
Miniature	Type RI-01/RI-02		**E2**
Miniature Compact	Type RI-04/RI-05		**E5**
Miniature Economy	Type RI-08/RI-09		**E8**
Incremental Encoders - Standard Shaft/Hollow Shaft			
Compact	Type RI-10/RI-12		**E11**
SinCos	Type RI-60/RI-61		**E19**
Stainless Steel	Type RI-65/RI-96		**E23**
High Resolution	Type RI-16/RI-64		**E27**
Large Bore	Type RI-43		**E32**
Wave Forms			**E38**
Magnetic Ring Encoder Assemblies			
	Type RMK-2		**E39**
	Type RMK-5		**E42**
Large Bore	Type RMKL-2		**E45**
Large Bore	Type RMKL-5		**E48**

We reserve the right to make technical alterations without prior notice.

Miniature Type RI-01 (Shaft) / RI-02 (Blind Hollow Shaft)



High rotational speed | Temperature | Magnetic field proof | Short-circuit protected | Reverse polarity protection

Rugged
- Wide temperature range -4 to +185 °F (-20 to +85 °C)
- Robust strain relief on cable outlet
- Highly flexible cable withstands constant flexing from 32 to 158 °F (0 to 70 °C)
- Very high EMC standard Turck encoder type RI-01, RI-02 meet German Railways standard EN 50121



Compact
- **Can be used where space is tight**
  Overall diameter of only 24 mm
  Shaft diameter min. 4 mm

Versatile
- Low power consumption despite high scanning rate
- Short-circuit proof
- Temperature compensation
- Broad input voltage range (5-24 V or 8-30 V)
- Shaft and hollow shaft up to 1024 ppr

Mechanical Characteristics:

Speed:	max. 12,000 RPM
Rotor moment of inertia:	approx. 5.5 x 10-3 oz-in2 (0.1 x 10-6 kgm^2)
Starting torque:	< 1.4 oz-in (< 0.01 Nm)
Radial load capacity of shaft:	2.25 lbs (10 N)
Axial load capacity of shaft:	4.5 lbs (20 N)
Weight:	approx 0.14 lbs (0.06 kg)
Protection acc. to EN 60529:	IP65 housing side, IP50 shaft side (IP64 on request)
Working temperature:	-4 to 185 °F (-20 to +85 °C)
Materials:	Shaft: stainless steel Blind hollow shaft: brass
Shock resistance acc. to EN 60068-2-27:	100 g (1,000 m/s^2), 6 ms
Vibration resistance acc. to EN 60068-2-6:	10 g (100 m/s^2), 55-2,000 Hz

Electrical Characteristics:

Output circuit [Key Code]:	Push-Pull [1D/2D] (7272 compatible) [3]	Push-Pull [1A/2A] (7272 compatible) [3]
Supply voltage:	5-24 VDC [5]	8-30 VDC
Power consumption (no load):	max. 50 mA	max. 50 mA
Permissible load/channel:	max. 50 mA	max. 50 mA
Pulse frequency:	max. 160 kHz	max. 160 kHz
Signal level high:	min. +V -2.5 V	min. +V -3 V
Signal level low:	max. 0.5 V	max. 0.5 V
Rise time t_r:	max. 1 µs	max. 1 µs
Fall time t_f:	max. 1 µs	max. 1 µs
Short-circuit protected [1]:	yes [2] [4]	yes [2] [4]
UL approval:	file E356899	
RoHS compliant acc. to EU guideline 2011/65/EU		

[1] If supply voltage correctly applied
[2] Only one channel allowed to be shorted-out:
(If +V=5 V, short-circuit to channel, 0 V, or +V is permitted.)
(If +V=5-30 V, short-circuit to channel or 0 V is permitted.)
[3] Max. recommended cable length 30 m
[4] Approximately one minute
[5] With 24 VDC there is no tolerance above 24 VDC.
Please use output circuit 8-30 VDC.

We reserve the right to make technical alterations without prior notice.

Miniature Type RI-01 (Shaft) / RI-02 (Blind Hollow Shaft)

Standard Wiring:

Connection Type	Case Ground	Common (0 V)	+V	A	$\overline{A}$	B	$\overline{B}$	Z	$\overline{Z}$
Cable	Shield/Drain	WH	BN	GN	-	YE	-	GY	-
Cable w/ Inverted Signals	Shield/Drain	WH	BN	GN	YE	GY	PK	BU	RD

Part Number Key: RI-01 Shaft Version

A	B	C		D	E		F
RI-01Q	5	F1	-	1A	1024	-	C

A	Type
RI-01Q	Ø 24 mm, Shaft w/ Flat, IP50 Shaft Seal
RI-01T	Ø 24 mm, Shaft, IP50 Shaft Seal

B	Shaft (Ø x L)
4	Ø 4 mm x 10 mm
5	Ø 5 mm x 10 mm [1]
6	Ø 6 mm x 10 mm
A0	Ø 1/4" x 10 mm [1]

[1] Available only with Type RI-01Q.

C	Flange
F1	Ø 24 mm
F2	Ø 30 mm
F3	Ø 28 mm

D	Voltage Supply and Output Type
1A	8-30 VDC, Push-Pull
1D	5-24 VDC, Push-Pull
2A	8-30 VDC, Push-Pull (w/ Inverted Signals)
2D	5-24 VDC, Push-Pull (w/ Inverted Signals)

E	Pulse Rate
4, 6, 8, 10, 16, 20, 25, 36, 40, 50, 60, 80, 100, 120, 125, 180, 200, 250, 300, 360, 400, 500, 512, 1000, 1024 (e.g. 360 pulses => 360) Other Pulse Rates Available on Request	

F	Type of Connection
C	Radial Cable (2 m PVC)
CA	Axial Cable (2 m PVC)

Part Number Key: RI-02 Blind Hollow Shaft Version

A	B	C		D	E		F
RI-02C	4	S3	-	1A	1024	-	C

A	Type
RI-02C	Ø 24 mm, Blind Hollow Shaft, IP50 Shaft Seal

B	Bore (14 mm Insertion Depth)
4	Ø 4 mm
6	Ø 6 mm
A0	Ø 1/4"

C	Flange
S3	Flange w/ Spring Element

D	Voltage Supply and Output Type
1A	8-30 VDC, Push-Pull
1D	5-24 VDC, Push-Pull
2A	8-30 VDC, Push-Pull (w/ Inverted Signals)
2D	5-24 VDC, Push-Pull (w/ Inverted Signals)

E	Pulse Rate
4, 6, 8, 10, 16, 20, 25, 36, 40, 50, 60, 80, 100, 120, 125, 180, 200, 250, 300, 360, 400, 500, 512, 1000, 1024 (e.g. 360 pulses => 360) Other Pulse Rates on Request	

F	Type of Connection
C	Radial Cable (2 m PVC)
CA	Axial Cable (2 m PVC)

Accessories:

- See page H1, Connectivity, for cables and connectors
- See page G1, Accessories, for mounting attachments and couplings

We reserve the right to make technical alterations without prior notice.

Miniature Type RI-01 (Shaft) / RI-02 (Blind Hollow Shaft)

Dimensions: RI-01 Shaft Version

RI-01 Flange F1
Connection C & CA

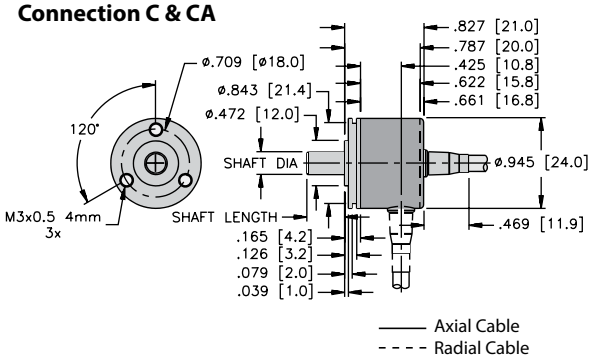

RI-01 Flange F2
Connection C & CA

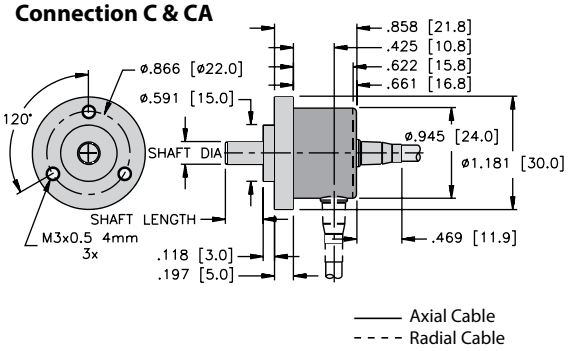

RI-01 Flange F3
Connection C & CA

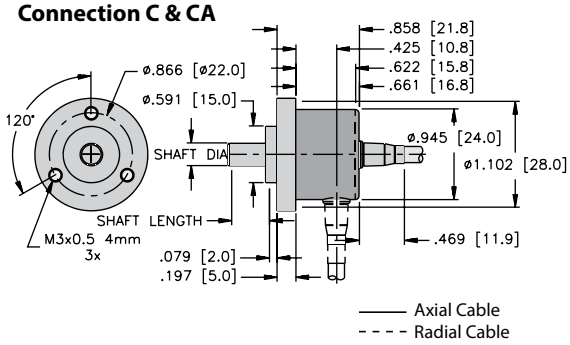

Mounting Advice:
The flanges and shafts of the encoder and drive should not be rigidly coupled together at the same time. We recommend the use of suitable couplings (see page G1, Accessories).

Dimensions: RI-02 Blind Hollow Shaft Version

RI-02 Flange S3
Connection C & CA

Accepts 3 mm torque pin N.615.683 included with encoder.

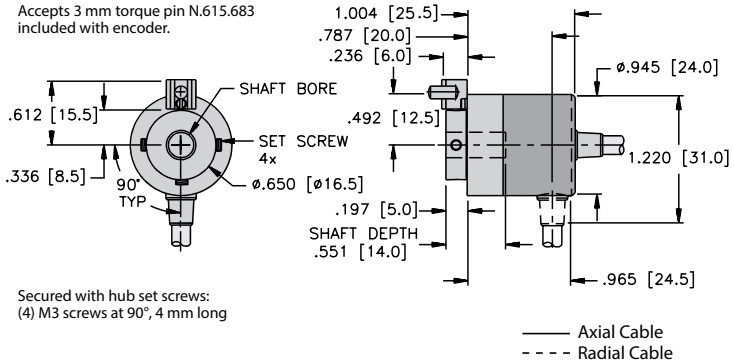

Secured with hub set screws:
(4) M3 screws at 90°, 4 mm long

Mounting Advice:
The flanges and shafts of the encoder and drive should not both be rigidly coupled together at the same time. A cylindrical pin (RA-TP-3-S per ISO 2338-A-3m6 x 10), for use as a torque stop, is supplied.

We reserve the right to make technical alterations without prior notice.

Turck Inc. | 3000 Campus Drive, Minneapolis, MN 55441 | T +1 800 544 7769 | F +1 763 553 0708 | www.turck.com

Compact Type RI-04 (Shaft) / RI-05 (Hollow Shaft)



High rotational speed | Temperature | Shock/vibration resistant | Magnetic field proof | Short-circuit protected | Reverse polarity protection

Rugged
- Chromated housing resistant to cooling lubricants and other environmental influences
- IP65 from housing side
- Robust strain relief on cable outlet.
- Highly flexible cable (withstands constant flexing at 32 to 158 °F (0 to 70 °C))
- Short-circuit proof
- Wide temperature range -4 to +185 °F (-20 to +85 °C)
- Temperature and aging compensation



Compact
- **Can be used where space is tight**
  Overall diameter of only 36.5 mm
  Shaft diameter min. 4 mm

Versatile
- Hollow shaft version: Fits directly onto drive shaft - no couplings needed - saves up to 30% on cost and 60% on installation space and time
- Universal application in mechanical engineering, vehicles, conveyors and elevators
- Low current consumption despite high scanning rate
- Broad input voltage range (5-18 V or 8-30 V)

Mechanical Characteristics:

Speed:	Shaft version: max. 12,000 RPM Hollow shaft version: max. 6,000 RPM
Rotor moment of inertia:	approx. 1.1 x 10-2 oz-in^2 (0.2 x 10-6 kgm^2)
Starting torque:	< 7 oz-in (< 0.05 Nm)
Radial load capacity of the shaft:	9 lbs (40 N)
Axial load capacity of the shaft:	4.5 lbs (20 N)
Weight:	approx. 0.175 lbs (0.08 kg)
Protection acc. to EN 60 529:	IP65, housing side, IP50 shaft side (IP64 on request)

Working temperature:	-4 to +185 °F (-20 to +85 °C)
Materials:	Shaft: stainless steel; Hollow shaft: brass Housing: chromated Aluminium Cable: PVC
Shock resistance acc. to EN 60068-2-27:	approx. 100 g (1,000 m/s^2), 6 ms
Vibration resistance acc. to EN 60068-2-6:	approx. 10 g (100 m/s^2), 55-2,000 Hz

Electrical Characteristics:

Output circuit [Key Code]:	Push-Pull [2I] (7272 compatible) [2]	Push-Pull [1H/2H] (7272 compatible) [2]	RS422 [4A/4D]
Supply voltage:	5-18 VDC	8-30 VDC	5 VDC(+/-5%) 8-30 VDC
Power consumption (no load) with inverted signal:	max. 40 mA	max. 40 mA	typ. 40 mA/max. 90 mA
Permissible load/channel:	max. ±20 mA	max. ±20 mA	max. ±20 mA
Pulse frequency:	max. 200 kHz	max. 200 kHz	max. 300 kHz
Signal level high:	min. +V -2.5 V	min. +V -3 V	min. 2.5 V
Signal level low:	max. 0.5 V	max. 0.5 V	max. 0.5 V
Rise time t_r:	max. 1 µs	max. 1 µs	max. 200 µs
Fall time t_f:	max. 1 µs	max. 1 µs	max. 200 µs
Short-circuit protected [1]:	yes	yes	yes
Reverse polarity protection:	yes	yes	yes
UL approval:	file E356899		
RoHS compliant acc. to EU guideline 2011/65/EU			

[1] If supply voltage correctly applied
[2] Max. recommended cable length 30 m

We reserve the right to make technical alterations without prior notice.

Compact Type RI-04 (Shaft) / RI-05 (Hollow Shaft)

Standard Wiring:

Connection Type	Case Ground	Common (0 V)	+V	A	$\overline{A}$	B	$\overline{B}$	Z	$\overline{Z}$
M12 Eurofast	Coupling Nut	1	2	3	4	5	6	7	8
Cable w/ Inverted Signals	Shield/Drain	WH	BN	GN	YE	GY	PK	BU	RD
Cable w/o Inverted Signals	Shield/Drain	WH	BN	GN	-	YE	-	GY	-

Wiring Diagram:

Male Encoder View
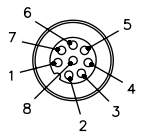 M12 Eurofast pinout
Mating cordset: **E-RKC 8T-930-***

* Length in meters.

Part Number Key: RI-04 Shaft Version

A	B	C		D	E		F
RI-04Q	6	C	-	1H	25	-	H1181

A	Type
RI-04Q	Ø 36 mm, Shaft w/ Flat, IP50 Shaft Seal
RI-04T	Ø 36 mm, Shaft, IP50 Shaft Seal

B	Shaft (Ø x L)
4	Ø 4 mm x 10 mm [1]
5	Ø 5 mm x 10 mm [1]
6	Ø 6 mm x 12.5 mm [2]
A0	Ø 1/4" x 12.5 mm [2]

[1] Available only with Type RI-04T
[2] Available only with Type RI-04Q

C	Flange
C	Clamping Flange
S	Servo Flange

D	Voltage Supply and Output Type
1H	8-30 VDC, Push-Pull
2H	8-30 VDC, Push-Pull (w/ Inverted Signals)
2I	5-18 VDC, Push-Pull (w/ Inverted Signals)
4A	5 VDC, RS422 (w/ Inverted Signals)
4D	8-30 VDC, RS422 (w/ Inverted Signals)

E	Pulse Rate
	25, 100, 200, 360, 500, 512, 600, 1000, 1024, 1250, 1500, 2000, 2048, 2500, 3600 (e.g. 500 Pulses => 500) Other Pulse Rates Available on Request

F	Type of Connection
H1181	Radial 8-pin M12 Eurofast Connector
H1481	Axial 8-pin M12 Eurofast Connector
C	Radial Cable (2 m PVC)
CA	Axial Cable (2 m PVC)

Part Number Key: RI-05 Hollow Shaft Version

A	B	C		D	E		F
RI-05I	6	E	-	1H	25	-	H1181

A	Type
RI-05I	Ø 36 mm, Hollow Shaft, IP50 Shaft Seal

B	Shaft (Ø x L)
6	Ø 6 mm
8	Ø 8 mm
A0	Ø 1/4"

C	Flange
E	Ø 19 mm Flange w/ Slotted Flex Mount
T	Ø 19 mm Flange w/ Long Torque Stop
T1	Ø 19 mm Flange w/ Short Torque Stop

D	Voltage Supply and Output Type
1H	8-30 VDC, Push-Pull
2H	8-30 VDC, Push-Pull (w/ Inverted Signals)
2I	5-18 VDC, Push-Pull (w/ Inverted Signals)
4A	5 VDC, RS422 (w/ Inverted Signals)
4D	8-30 VDC, RS422 (w/ Inverted Signals)

E	Pulse Rate
	25, 100, 200, 360, 500, 512, 600, 1000, 1024, 1250, 1500, 2000, 2048, 2500, 3600 (e.g. 500 Pulses => 500) Other Pulse Rates Available on Request

F	Type of Connection
H1181	Radial 8-pin M12 Eurofast Connector
C	Radial Cable (2 m PVC)

Accessories:

- See page H1, Connectivity, for cables and connectors
- See page G1, Accessories, for mounting attachments and couplings

We reserve the right to make technical alterations without prior notice.

Compact Type RI-04 (Shaft) / RI-05 (Hollow Shaft)

Dimensions: RI-04 Shaft Version

RI-04 Flange S
Connection C & CA

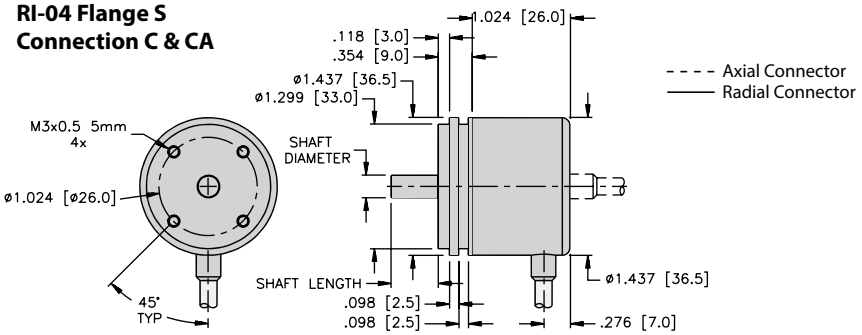

RI-04 Flange C
Connection H1181 & H1481

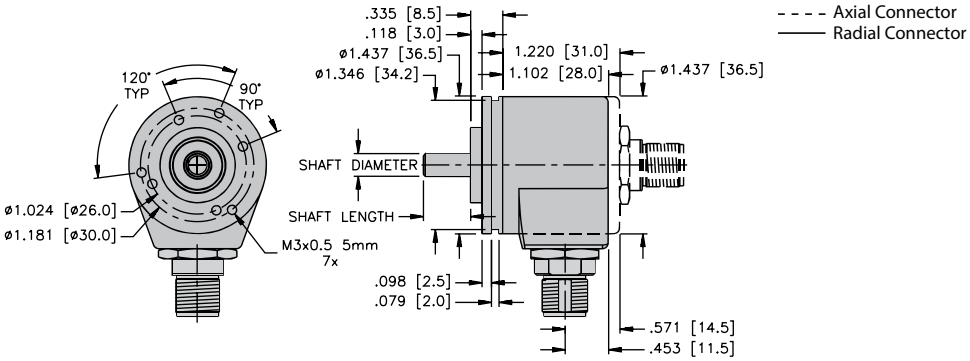

Mounting Advice:
The flanges and shafts of the encoder and drive should not be rigidly coupled together at the same time. We recommend the use of suitable couplings (see page G1, Accessories).

Dimensions: RI-05 Hollow Shaft Version

RI-05 Flange T1
Connection C

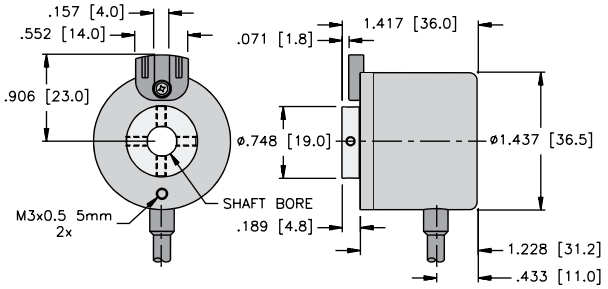

RI-05 Flange T
Connection C

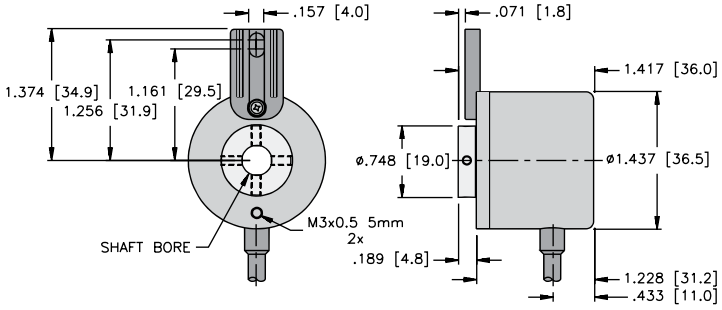

RI-05 Flange E
Connection H1181

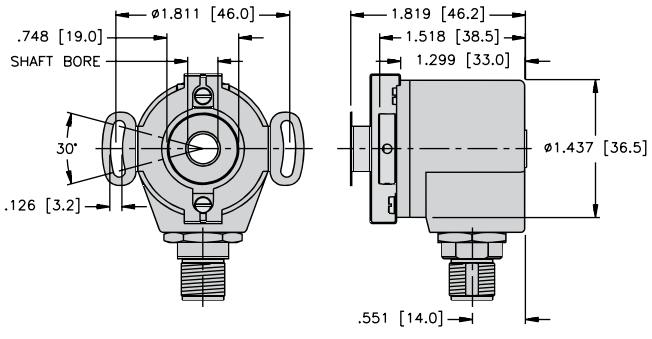

We reserve the right to make technical alterations without prior notice.

Economy Type RI-08 (Shaft) / RI-09 (Hollow Shaft)

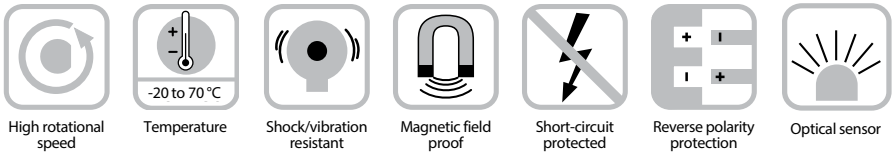

High rotational speed | Temperature | Shock/vibration resistant | Magnetic field proof | Short-circuit protected | Reverse polarity protection | Optical sensor

Rugged
- Temperature and aging compensation
- Short-circuit protected outputs
- Flange and cover made from a new High-Tech-Material (composite material)
- High component integration leads to low profile design, high performance and economical pricing
- Cable outlet guarantees 10x higher strain relief than traditional cabling methods and ensures IP67 protection



RoHS compliant

Compact
- Compact size only Ø 37 x 33 mm

Versatile
- Hollow shaft version: Fits directly onto drive shaft - no couplings needed - saves up to 30% on cost and 60% on installation space and time
- 1 1/2" (37 mm) diameter housing suitable for replacing resolvers

Mechanical Characteristics:

Speed:	max. 6,000 RPM
Rotor moment of inertia:	Shaft version: approx. 2.2 x 10-2 oz-in^2 (0.4 x 10-6 kgm^2) Hollow shaft version: approx. 7.7 x 10-2 oz-in^2 (1.4 x 10-6 kgm^2)
Starting torque:	Shaft version: < 1.0 oz-in (< 0.007 Nm) Hollow shaft version: < 1.4 oz-in (< 0.01 Nm)
Radial load capacity of the shaft:	4.5 lbs (20 N)
Axial load capacity of the shaft:	2.25 lbs (10 N)
Weight:	approx. 0.22 lbs (0.1 kg)
Protection acc. to EN 60 529:	IP65 housing (IP67 on request)

Working temperature:	-4 to 158 °F (-20 up to +70 °C) [1]
Materials:	Shaft/hollow shaft: stainless steel; housing, flange: composite PPA, 40% CF (carbon fiber); cable: PVC
Shock resistance acc. to EN 60068-2-27:	approx. 100 g (1,000 m/s^2), 6 ms
Vibration resistance acc. to EN 60068-2-6:	approx. 10 g (100 m/s^2), 10-2,000 Hz

[1] For versions with push-pull output and supply voltage >15 VDC: max. 131 °F (55 °C)

Electrical Characteristics:

Output circuit [Key Code]:	RS422 [4A] (TTL compatible)	Push-Pull [2F] (7272 compatible) [3]	Push-Pull [2J] (7272 compatible) [3]
Supply voltage:	5 V (±5%)	5-30 VDC	10-30 VDC
Power consumption (no load) with inverted signal:	typ. 40 mA / max. 90 mA	typ. 50 mA / max. 100 mA	typ. 50 mA / max. 50 mA
Permissible load/channel:	max. ±20 mA	max. ±20 mA	max. ±20 mA
Pulse frequency:	max. 250 kHz	max. 250 kHz	max. 250 kHz
Signal level high:	min. 2.5 V	min. +V - 2.0 V	min. +V - 2.0 V
Signal level low:	max. 0.5 V	max. 0.5 V	max. 0.5 V
Rise time t_r:	max. 200 ns	max. 1 µs	max. 1 µs
Fall time t_f:	max. 200 ns	max. 1 µs	max. 1 µs
Short-circuit protected [1]:	yes [2]	yes	yes
Reverse polarity protection:	no	no	yes

RoHS compliant acc. to EU guideline 2011/65/EU

[1] If supply voltage correctly applied
[2] Only one channel allowed to be shorted-out:
(If +V=5 V, short-circuit to channel, 0 V, or +V is permitted.) (If +V=5-30 V, short-circuit to channel or 0 V is permitted.)
[3] Max. recommended cable length 30 m

We reserve the right to make technical alterations without prior notice.

Turck Inc. | 3000 Campus Drive, Minneapolis, MN 55441 | T +1 800 544 7769 | F +1 763 553 0708 | www.turck.com

Economy Type RI-08 (Shaft) / RI-09 (Hollow Shaft)

Standard Wiring:

Connection Type	Case Ground	Common (0 V)	+V	A	$\overline{A}$	B	$\overline{B}$	Z	$\overline{Z}$
M12 Eurofast	Coupling Nut	1	2	3	4	5	6	7	8
Cable	Shield/Drain	WH	BN	GN	YE	GY	PK	BU	RD

Wiring Diagram:

Male Encoder View
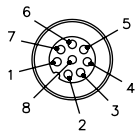
M12 Eurofast Pinout
Mating Cordset: **E-RKC 8T-930-***

* Length in meters.

Part Number Key: RI-08 Shaft Version

A	B	C		D	E		F
RI-08Q	4	S	-	2F	10	-	C

A	Type
RI-08Q	Ø 37 mm, Shaft w/ Flat, IP65 Shaft Seal

B	Shaft (Ø x L)
4	Ø 4 mm x 12.5 mm
5	Ø 5 mm x 12.5 mm
6	Ø 6 mm x 12.5 mm
8	Ø 8 mm x 12.5 mm
A0	Ø 1/4" x 12.5 mm

C	Flange
S	Ø 20 mm Flange w/o Adapter
S1	Ø 20 mm Flange w/ Adapter

D	Voltage Supply and Output Type
2F	5-30 VDC, Push-Pull (w/ Inverted Signals)
2J	10-30 VDC, Push-Pull (w/ Inverted Signals)
4A	5 VDC (±5%), RS422 (w/ Inverted Signals)

E	Pulse Rate
	10, 25, 50, 60, 100, 200, 250, 300, 360, 400, 500, 512, 600, 1000, 1024 (e.g. 250 Pulses => 250) Other Pulse Rates Available on Request

F	Type of Connection
C	Radial Cable (2 m PVC)
C1M	Radial Cable (1 m PVC)
CA	Axial Cable (2 m PVC)
CA1M	Axial Cable (1 m PVC)

Part Number Key: RI-09 Hollow Shaft Version

A	B	C		D	E		F
RI-09I	4	E	-	2F	10	-	C

A	Type
RI-09I	Ø 36 mm, Hollow Shaft, IP65 Shaft Seal

B	Bore
4	Ø 4 mm
5	Ø 5 mm
6	Ø 6 mm
8	Ø 8 mm
A0	Ø 1/4"

C	Flange
E	Ø 19 mm Flange w/ Slotted Flex Mount
T	Ø 19 mm Flange w/ Long Torque Stop
T1	Ø 19 mm Flange w/ Short Torque Stop

D	Voltage Supply and Output Type
2F	5-30 VDC, Push-Pull (w/ Inverted Signals)
2J	10-30 VDC, Push-Pull (w/ Inverted Signals)
4A	5 VDC (±5%), RS422 (w/ Inverted Signals)

E	Pulse Rate
	10, 25, 50, 60, 100, 200, 250, 300, 360, 400, 500, 512, 600, 1000, 1024 (e.g. 250 Pulses => 250) Other Pulse Rates Available on Request

F	Type of Connection
C	Radial Cable (2 m PVC)
C1M	Radial Cable (1 m PVC)

Accessories:

- See page H1, Connectivity, for cables and connectors
- See page G1, Accessories, for mounting attachments and couplings

We reserve the right to make technical alterations without prior notice.

Economy Type RI-08 (Shaft) / RI-09 (Hollow Shaft)

Dimensions: RI-08 Shaft Version

RI-08 Flange S
Connection C & CA

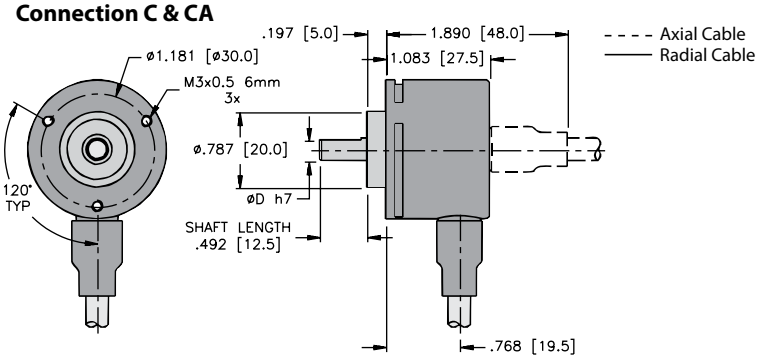

RI-08 Flange S1
Connection C & CA

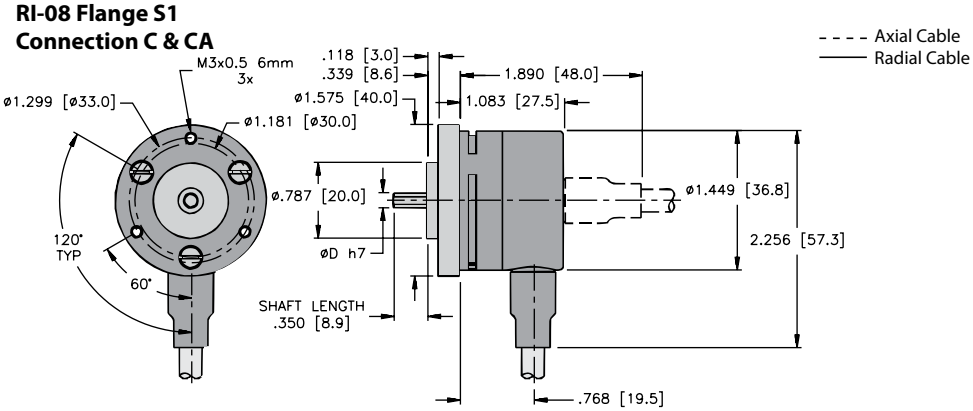

Mounting Advice:
The flanges and shafts of the encoder and drive should not be rigidly coupled together at the same time. We recommend the use of suitable couplings (see page G1, Accessories).

Dimensions: RI-09 Hollow Shaft Version

RI-09 Flange T & T1
Connection C

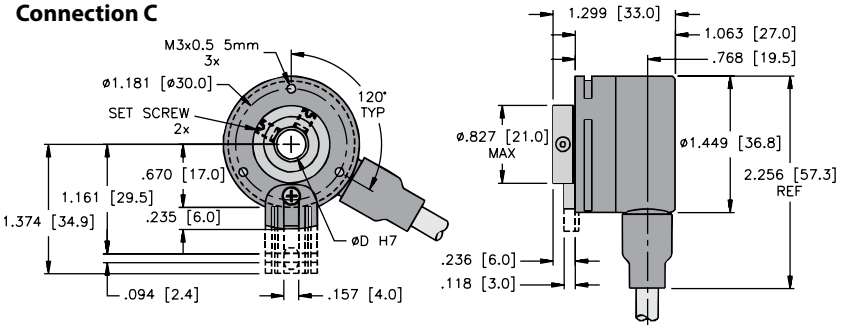

RI-09 Flange E
Connection C

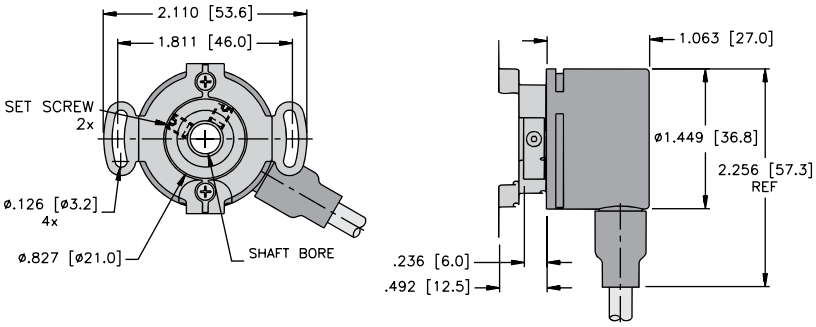

We reserve the right to make technical alterations without prior notice.

Turck Inc. | 3000 Campus Drive, Minneapolis, MN 55441 | T +1 800 544 7769 | F +1 763 553 0708 | www.turck.com

Incremental Type RI-10 (Shaft) / RI-12 (Hollow Shaft)


Bearing-Lock


High rotational speed

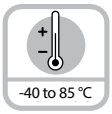

Temperature



High IP

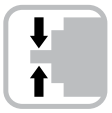
High shaft load capacity


Shock/vibration resistant


Magnetic field proof


Short-circuit protected


Reverse polarity protection


Optical sensor


Seawater-resistant version on request

Versatile

- **The right connection for every application:** Cable, M12 connector, M23 connector, and Mil-Spec Connectors.
- **Wide variety of standard industrial mounting options:** Servo, square, clamping flanges.
- **Standardized designs for worldwide use:** Compatible with US and European standards; 5-30 V supplies; Various output options; Up to 5,000 ppr.



Compact

- **Small footprint:** Outer diameter 2" x 2" Can utilize 2" or 2.5" flanges.

Rugged and Tough

- **High tolerance to vibration, shock and alignment issues:** Sturdy double bearing lock design.
- **Environmentally protected design:** Die-cast housings; butyl rubber shaft seals and O-rings; robust stainless steel hubs, flanges, and disc tables. Ratings up to IP67.
- **Wide temperature range:** -40 to +185 °F (-40 to +85 °C)
- Also available in seawater resistant version, certified acc. to salt-spray test IEC 68-2-11 ≥ 672 hours

Mechanical Characteristics:

Speed IP65 [1]:	max. 12,000 RPM
Speed IP67 [2]:	max. 6,000 RPM
Rotor moment of inertia:	Shaft: approx. 0.098 oz-in² (1.8 x 10-6 kgm²) Hollow shaft: approx. 0.328 oz-in² (6.0 x 10-6 kgm²)
Starting torque:	< 1.4 oz-in (< 0.01 Nm), IP65 < 7 oz-in (< 0.05 Nm), IP67
Radial load capacity of the shaft:	18 lbs (80 N)
Axial load capacity of the shaft:	9 lbs (40 N)

Weight:	approx. 0.9 lbs (0.4 kg)
Protection acc. to EN 60 529 without shaft sealing:	IP65
Protection acc. to EN 60 529 with shaft sealing:	IP67
Working temperature[3]:	-40 to +185 °F (-40 to +85 °C)
Shaft:	stainless steel
Shock resistance acc. to EN 60068-2-27:	250 g (2,500 m/s²), 6 ms
Vibration resistance to EN 60068-2-6:	10 g (100 m/s²), 10-2,000 Hz

[1] For continuous operation 6000 RPM
[2] For continuous operation max. 3000 RPM
[3] With connector: -40 °F (-40 °C), cable fixed: -22 °F (-30 °C), cable moved: -4 °F (-20 °C)

Electrical Characteristics:

Output circuit [Key Code]:	RS 422 [4B] (TTL compatible)	RS 422 [4A] (TTL compatible)	Push-Pull [2B]	Push-Pull [2K] (7272 compatible) [3]	Open Collector [CA] (7273) [3]
Supply voltage:	5-30 VDC	5 V ±5%	10-30 V DC	5-30 V DC	5-30 V DC
Power consumption (no load):	typ. 40 mA max. 90 mA	typ. 40 mA max. 90 mA	typ. 50 mA max. 100 mA	typ. 50 mA max. 100 mA	100 mA
Permissible load/channel:	max. ±20 mA	max. ±20 mA	max. ±20 mA	max. ±20 mA	20 mA sink@30 VDC
Pulse frequency:	max. 300 kHz	max. 300 kHz	max. 300 kHz	max. 300 kHz	max. 300 kHz
Signal level high:	min. 2.5 V	min. 2.5 V	min. +V -1.0 V	min. +V -2.0 V	n/a
Signal level low:	max. 0.5 V	max. 0.5 V	max. 0.5 V	max. 0.5 V	n/a
Rise time t_r:	max. 200 ns	max. 200 ns	max. 1 µs	max. 1 µs	
Fall time t_f:	max. 200 ns	max. 200 ns	max. 1 µs	max. 1 µs	
Short-circuit protected [1]:	yes [2] [4]	yes [2] [4]	yes	yes [2] [4]	yes
Reverse polarity protection:	yes	no	yes	no	no
UL approval:	file E356899				
RoHS compliant acc. to EU guideline 2011/65/EU					

[1] If supply voltage correctly applied

[2] Only one channel allowed to be shorted-out: (If +V=5 V, short-circuit to channel, 0 V, or +V is permitted.) (If +V=5-30 V, short-circuit to channel or 0 V is permitted.)

[3] Max. recommended cable length 30 m
[4] Approximately one minute

We reserve the right to make technical alterations without prior notice.

Incremental Type RI-10 (Shaft) / RI-12 (Hollow Shaft)

Standard Wiring :

Connection Type	Case Ground	Common (0V)	+V	A	$\overline{A}$	B	$\overline{B}$	Z	$\overline{Z}$	N/C	N/C	0V [1] Sens	+V [2] Sens
M23 Multifast	Coupling Nut	10	12	5	6	8	1	3	4	-	-	11	2
MS 6-pin	-	A	B	E	-	D	-	C	-	-	-		
MS 7-pin	G	F	D	A	-	B	-	C	-	-	-		E
MS 10-pin	J	F	D	A	G	B	H	C	I	-	-		E
M12 Eurofast 8-pin	Coupling Nut	1	2	3	4	5	6	7	8	-	-		
M12 Eurofast 5-pin	Coupling Nut	3	1	4	-	2	-	5	-	-	-		
Cable	Shield/Drain	WH	BN	GN	YE	GY	PK	BU	RD	BK	VT	GY/PK	RD/BU

[1] The sensor cables are connected to the supply voltage internally. If long feeder cables are involved they can be used to adjust or control the voltage at the encoder.
[2] Isolate unused outputs before initial startup.

Special Pin Configuration:

		Connection Type	Case Ground	Common (0V)	+V	A	$\overline{A}$	B	$\overline{B}$	Z	$\overline{Z}$
Wiring Code	N41	M12 Eurofast 8-pin	Coupling Nut	7	2	1	3	4	5	6	8
	N35	MS 6-pin	-	A, F	B	D	-	E	-	C	-
	N38	MS 7-pin	G	F	D	A	C	B	E	-	-
	N40	MS 10-pin	G	F	D	A	H	B	I	C	J
	N78	M12 Eurofast 5-pin	Coupling Nut	1	2	3	-	4	-	5	-

Wiring Diagrams:

Male Encoder View

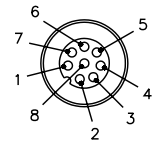

M12 Eurofast Pinout

Mating Cordset:
E-RKC 8T-930-*

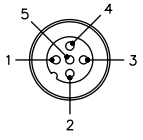

M12 Eurofast Pinout

Mating Cordset:
E-RKC 4.5T-930-*

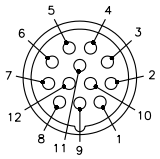

M23 Multifast Pinout

Mating Cordset:
E-CKM 12-931-*

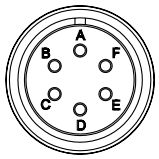

MS Pinout (6-pin)

Mating Cordset:
E-MK 6-0-*

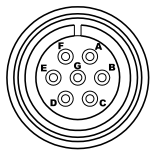

MS Pinout (7-pin)

Mating Cordset:
E-MK 7-930-*

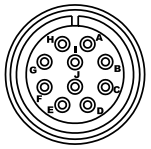

MS Pinout (10-pin)

Mating Cordset:
E-MK 10-931-*

* Length in meters.

Incremental Type RI-10 (Shaft) / RI-12 (Hollow Shaft) Accessories - Inserts

Isolation/Adapter Inserts for Hollow Shaft Encoders



Thermal and Electrical Isolation of the Encoders:
Isolation inserts prevent currents from passing through the encoder bearings. These currents can occur when using inverter controlled three-phase or AC vector motors and considerably shorten the service life of the encoder bearings. In addition, the encoder is thermally isolated as the plastic does not transfer the heat to the encoder.

Tip:
By using these adapter inserts, you can achieve six different hollow shaft diameters, all on the basis of one 15 mm encoder.

Dimensions:

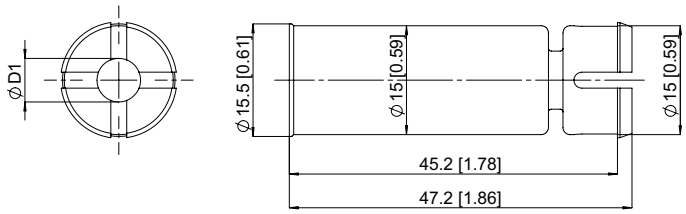

Isolation Insert	D1 [mm]	D1 [in]
RSA-6-12	6	
RSA-A0-12	6.35	(1/4)
RSA-10-12	10	
RSA-A1-12	9.53	(3/8)
RSA-12-12	12	
RSA-A3-12	12.7	(1/2)

Note: Use with 15 mm bore size hollow shaft RI-12 encoder.

We reserve the right to make technical alterations without prior notice.

Incremental Type RI-10 (Shaft)

Part Number Key: RI-10 Shaft Version

A	B	C		D	E		F		G/H
RI-10S	6	Z2	-	2B	1024	-	H1181	/	Specials

A	Type
RI-10S	Ø 2", Shaft, IP67 Shaft Seal
RI-10T	Ø 2", Shaft, IP65 Shaft Seal

B	Shaft (Ø x L)
6	Ø 6 mm x 10 mm
8	Ø 8 mm x 15 mm
10	Ø 10 mm x 20 mm
12	Ø 12 mm x 20 mm
A0	Ø 1/4" [1]
A1	Ø 3/8" [2]

[1] 1/4" x 5/8" for Flange Z2, Z4, C & S. 1/4" x 7/8" for Flange R & S0.
[2] 3/8" x 5/8" for Flange Z2, Z4, C & S. 3/8" x 7/8" for Flange R & S0.

C	Flange
Z2	Ø 2" Servo Flange
Z4	2" Square Flange
C	Ø 58 mm Clamping Flange
S	Ø 58 mm Servo Flange
R	2.5" Square Flange
S0	Ø 2.5" Servo Flange

D	Voltage Supply and Output Type
2B	10-30 VDC, Push-Pull
2K	5-30 VDC, Push-Pull (7272 comp. w/o bypass capacitor)
4A	5 VDC, RS422 (TTL compatible)
4B	5-30 VDC, RS422 (TTL compatible)
CA	5-30 VDC, Open Collector

E	Pulse Rate
1, 2, 4, 5, 10, 12, 14, 20, 25, 28, 30, 32, 36, 50, 60, 64, 80, 100, 120, 125, 150, 180, 200, 240, 250, 256, 300, 342, 360, 375, 400, 500, 512, 600, 625, 720, 800, 900, 1000, 1024, 1200, 1250, 1500, 1800, 2000, 2048, 2500, 3000, 3600, 4000, 4096, 5000 (e.g. 250 Pulses => 250) Other Pulse Rates Available on Request	

F	Type of Connection
H1181	Radial 8-pin M12 Eurofast Connector
H1481	Axial 8-pin M12 Eurofast Connector
H1151	Radial 5-pin M12 Eurofast Connector
H1451	Axial 5-pin M12 Eurofast Connector
12M23	Radial 12-pin M23 Multifast® Connector
12M23A	Axial 12-pin M23 Multifast Connector
6MIL	Radial 6-pin MS Connector
7MIL	Radial 7-pin MS Connector
10MIL	Radial 10-pin MS Connector
C1M	Radial Cable (1 m PVC)
CA1M	Axial Cable (1 m PVC)

G	Special Output Signal Formats
N21 to N33 (See Page E38)	

H	Special Connector Pin Configuration
N35 to N41 (See Page E12)	

We reserve the right to make technical alterations without prior notice.

Accessories:

- See page H1, Connectivity, for cables and connectors
- See page G1, Accessories, for mounting attachments and couplings

Incremental Type RI-12 (Hollow Shaft)

Part Number Key: RI-12 Hollow Shaft Version

A	B	C		D	E		F		G/H
RI-12H	6	S1	-	2B	1024	-	H1181	/	Specials

A	Type
RI-12H	Ø 2" Hollow Shaft, IP67 Shaft Seal
RI-12I	Ø 2" Hollow Shaft, IP65 Shaft Seal

B	Bore
6	Ø 6 mm
8	Ø 8 mm
10	Ø 10 mm
12	Ø 12 mm
14	Ø 14 mm
15	Ø 15 mm
A0	Ø 1/4"
A1	Ø 3/8"
A3	Ø 1/2"
A4	Ø 5/8"

C	Flange
S1	Flange w/ Long Tether Arm
T	Flange w/ Torque Stop*
E2	Ø 2.25" w/ Flex Mount
E	Ø 63 mm w/ Slotted Flex Mount
E1	Ø 65 mm w/ Flex Mount

* Requires 4 mm torque pin

D	Voltage Supply and Output Type
2B	10-30 VDC, Push-Pull
2K	5-30 VDC, Push-Pull (7272 comp. w/o bypass capacitor)
4A	5 VDC, RS422 (TTL compatible)
4B	5-30 VDC, RS422 (TTL compatible)
CA	5-30 VDC, Open Collector

E	Pulse Rate
1, 2, 4, 5, 10, 12, 14, 20, 25, 28, 30, 32, 36, 50, 60, 64, 80, 100, 120, 125, 150, 180, 200, 240, 250, 256, 300, 342, 360, 375, 400, 500, 512, 600, 625, 720, 800, 900, 1000, 1024, 1200, 1250, 1500, 1800, 2000, 2048, 2500, 3000, 3600, 4000, 4096, 5000 (e.g. 250 Pulses => 250) Other Pulse Rates Available on Request	

F	Type of Connection
H1181	Radial 8-pin M12 Eurofast Connector
H1151	Radial 5-pin M12 Eurofast Connector
12M23	Radial 12-pin M23 Multifast Connector
10MIL	Radial 10-pin MS Connector
C1M	Radial Cable (1 m PVC)
CT1M	Tangential Cable (1 m PVC)
CT0.3M-FSFDS	Tangential Cable w/ 0.3 m M12 Eurofast Connector

G	Special Output Signal Formats
N21 to N33 (See Page E38)	

H	Special Connector Pin Configuration
N36 - N41 (See Page E12)	

We reserve the right to make technical alterations without prior notice.

Accessories:

- See page H1, Connectivity, for cables and connectors
- See page G1, Accessories, for mounting attachments and couplings

Incremental Type RI-10 (Shaft) / RI-12 (Hollow Shaft)

Dimensions: RI-10 Shaft Version

RI-10 Flange Z2
Connection H11*1 & H14*1

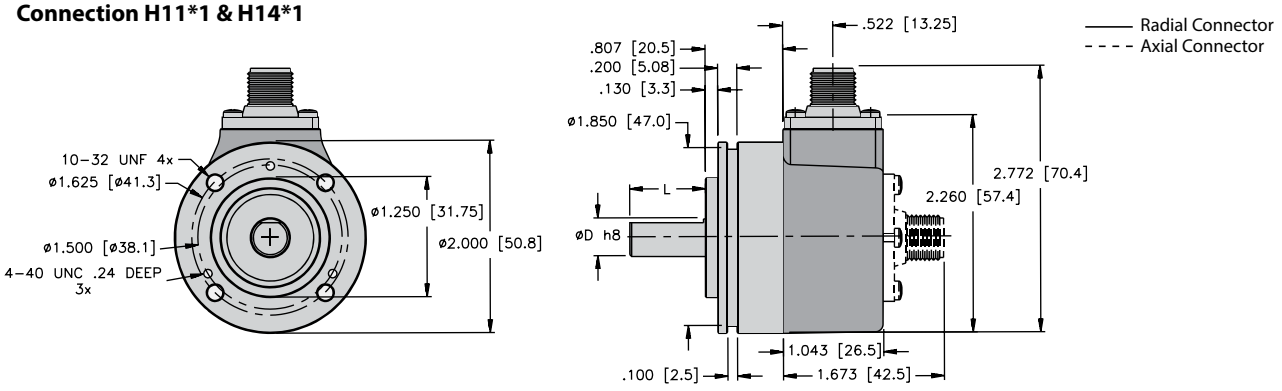

RI-10 Flange Z4
Connection C & CA

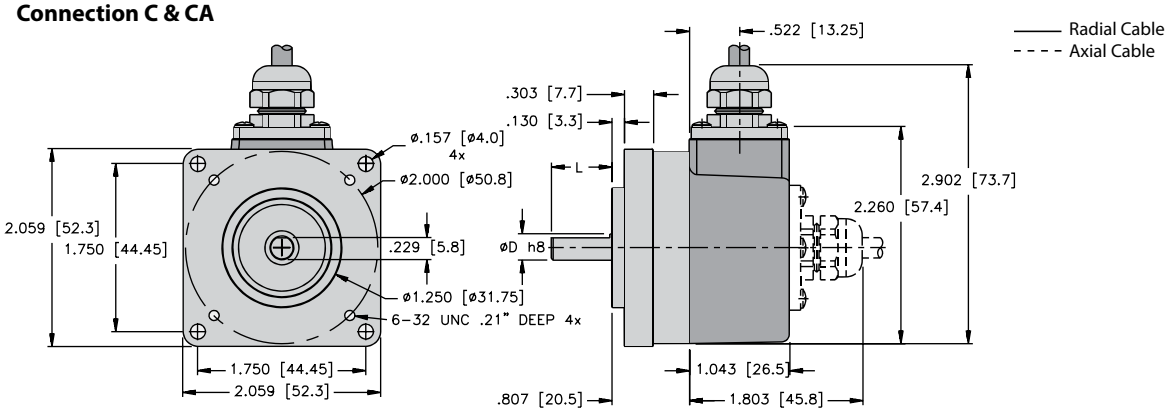

RI-10 Flange R
Connection 6 MIL, 7 MIL & 10 MIL

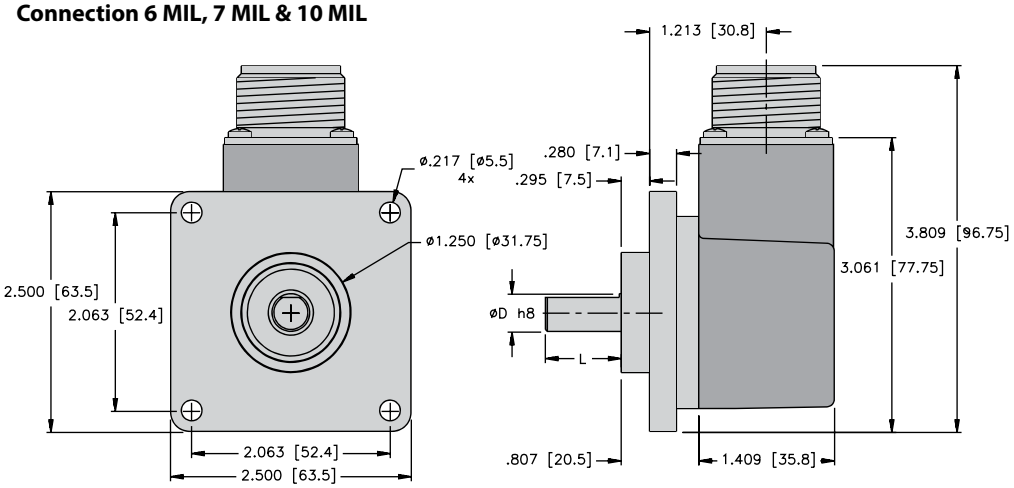

Mounting advice:
The flanges and shafts of the encoder and drive should not be rigidly coupled together at the same time. We recommend the use of suitable couplings (see page G1, Accessories).

We reserve the right to make technical alterations without prior notice.

Incremental Type RI-10 (Shaft) / RI-12 (Hollow Shaft)

Dimensions: RI-10 Shaft Version

RI-10 Flange C
Connection 12M23 & 12M23A

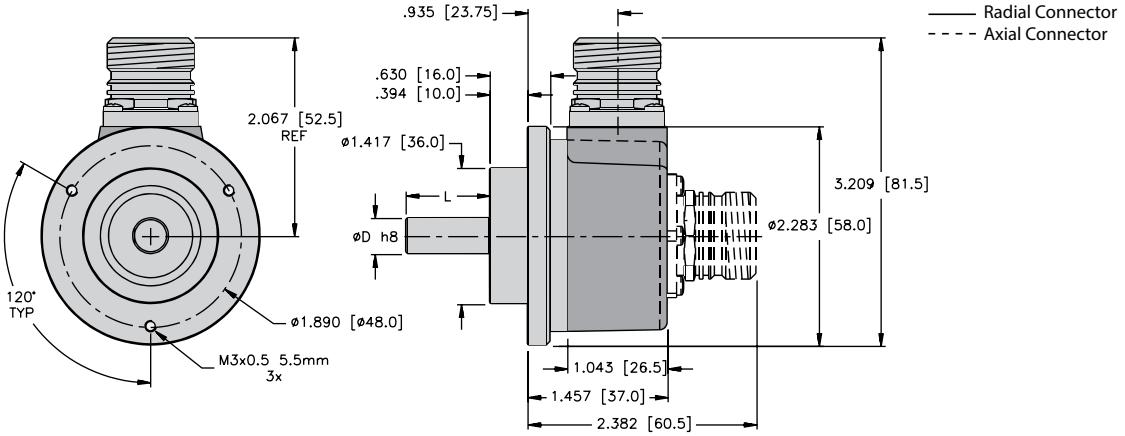

RI-10 Flange S
Connection C & CA

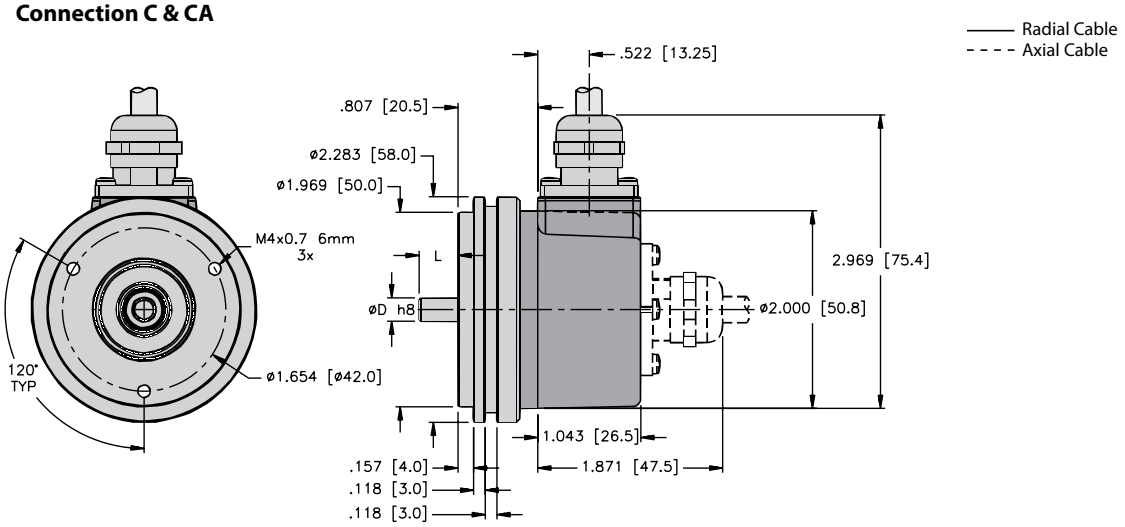

RI-10 Flange S0
Connection H11*1 & H14*1

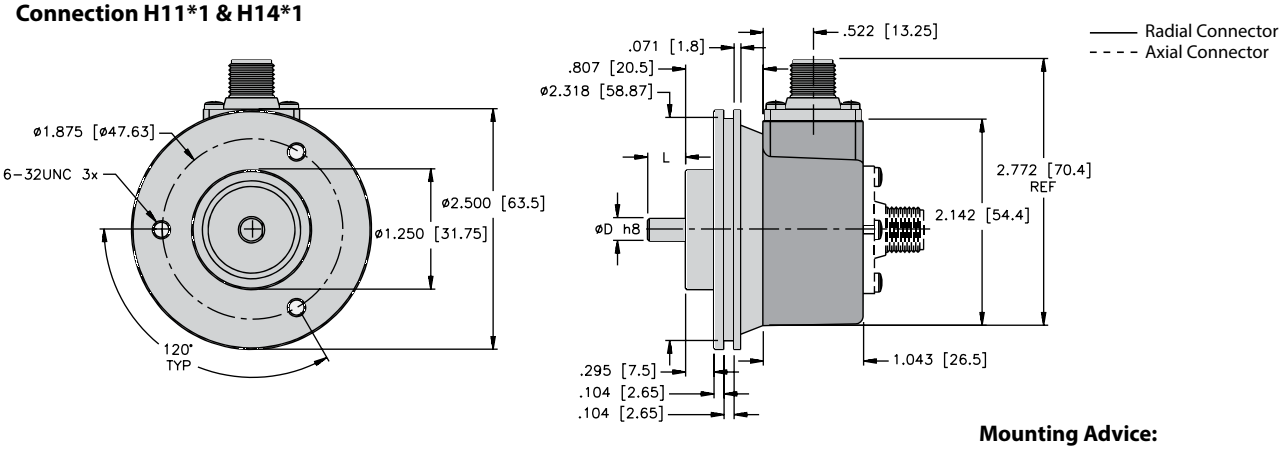

Mounting Advice:
The flanges and shafts of the encoder and drive should not be rigidly coupled together at the same time. We recommend the use of suitable couplings (see page G1, Accessories).

We reserve the right to make technical alterations without prior notice.

Turck Inc. | 3000 Campus Drive, Minneapolis, MN 55441 | T +1 800 544 7769 | F +1 763 553 0708 | www.turck.com

Incremental Type RI-10 (Shaft) / RI-12 (Hollow Shaft)

Dimensions: RI-12 Hollow Shaft Version

RI-12 Flange T
Connection C

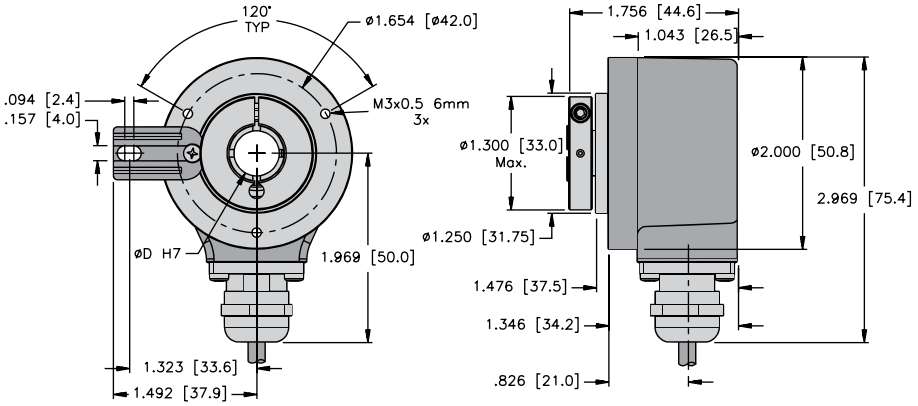

RI-12 Flange S1
Connection H11*1

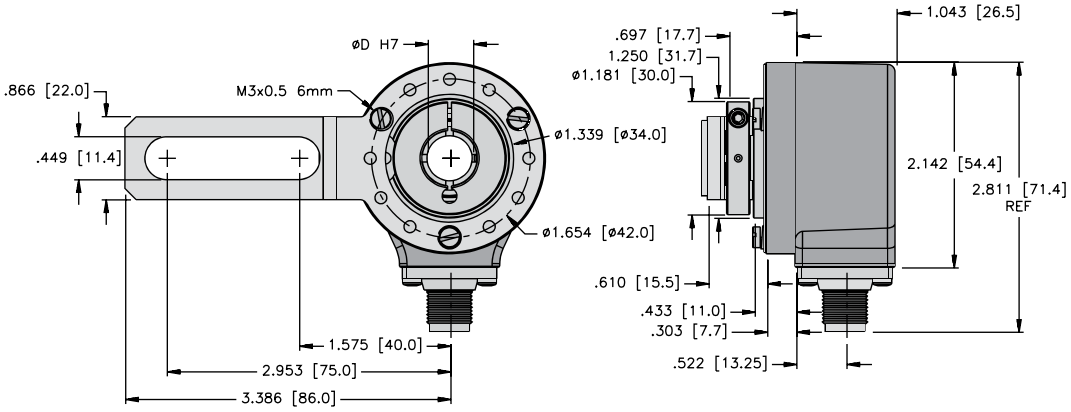

RI-12 Flange E2
Connection 12M23

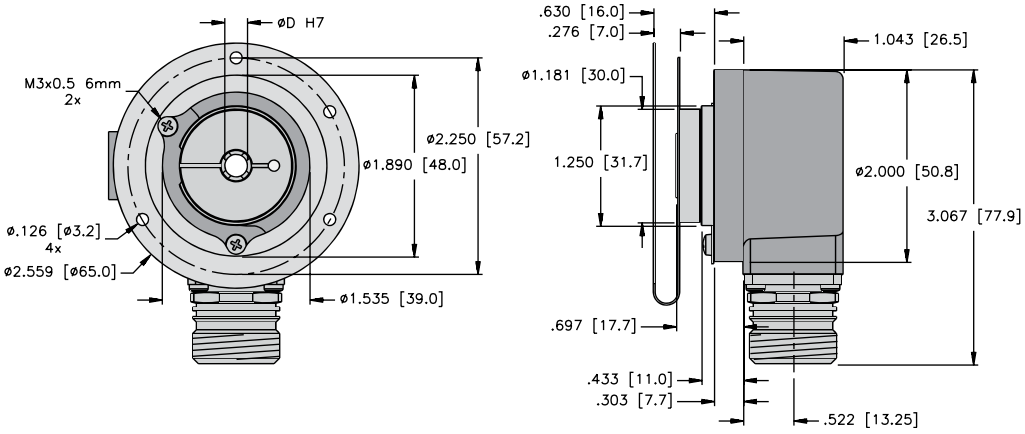

We reserve the right to make technical alterations without prior notice.

Incremental Type RI-10 (Shaft) / RI-12 (Hollow Shaft)

Dimensions: RI-12 Hollow Shaft Version

RI-12 Flange E1
Connection 10 MIL

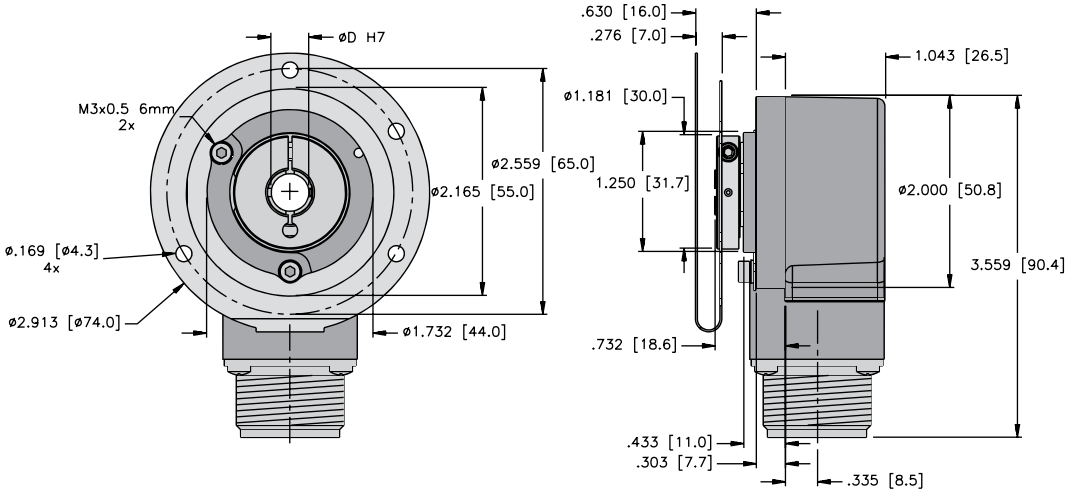

RI-12 Flange E1
Connection CT

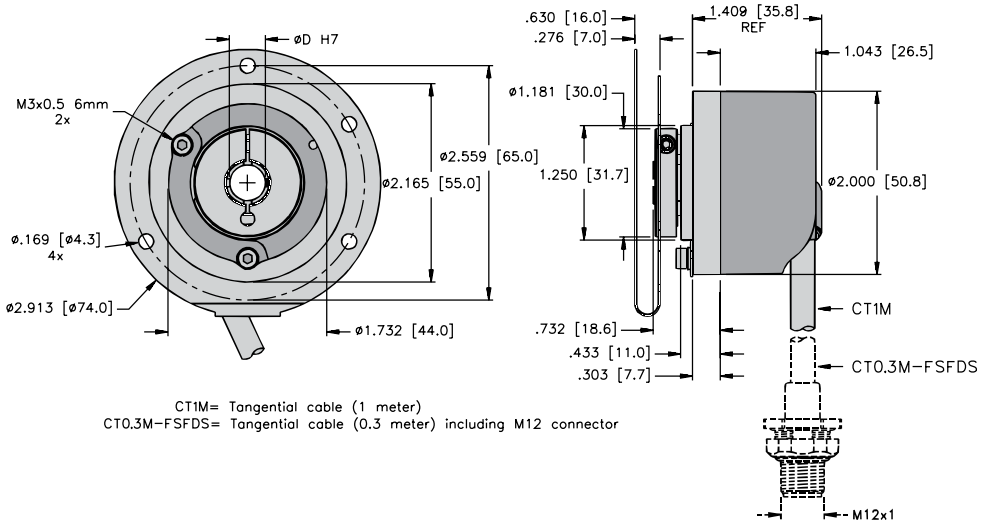

CT1M= Tangential cable (1 meter)
CT0.3M-FSFDS= Tangential cable (0.3 meter) including M12 connector

RI-12 Flange E
Connection H11*1

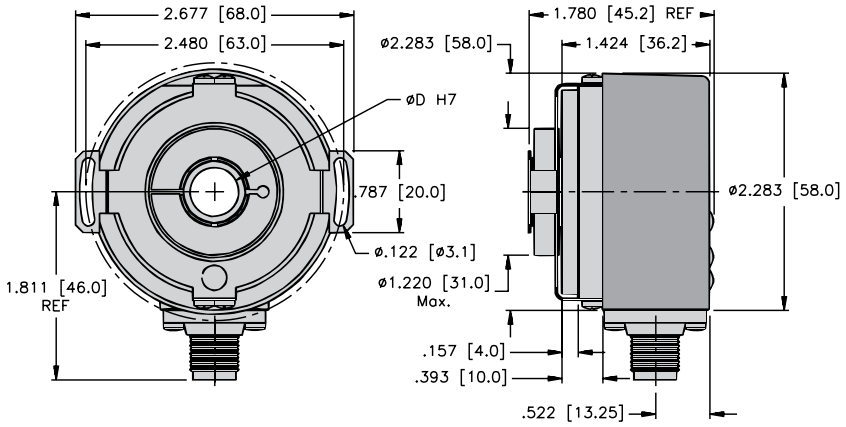

We reserve the right to make technical alterations without prior notice.

Turck Inc. | 3000 Campus Drive, Minneapolis, MN 55441 | T +1 800 544 7769 | F +1 763 553 0708 | www.turck.com

Incremental Type RI-60 (Shaft) / RI-61 (Hollow Shaft), SinCos



Bearing-Lock | High rotational speed | Temperature | High IP | High shaft load capacity | Shock/vibration resistant | Magnetic field proof | Reverse polarity protection | SinCos | Optical sensor | Surface protection salt spray-tested optional

Versatile
- **With incremental SinCos tracks.**
- **Shaft and hollow shaft versions.**
- **Cable and connector variants.**



RoHS compliant

Compact
- **Can be used even where space is tight:** outer diameter 58 mm

Rugged
- **Suited for motor feedback applications.**
- **Very high signal quality.**
- **Various mounting options available.**

Mechanical Characteristics:

Max speed:		
	IP65	12000 rpm, 5000 rpm (continuous)
	IP67	8000 rpm, 2000 rpm (continuous)
Starting torque at 68 °F (20 °C):		
	IP65	<1.4 oz-in (<0.01 Nm)
	IP67	<7 oz-in (<0.05 Nm)
Mass moment of inertia:		
	shaft	0.21 oz-in^2 (4.0 x 10^{-6} kgm^2)
	hollow shaft	0.38 oz-in^2 (7.0 x 10^{-6} kgm^2)
Load capacity of shaft:		
	radial	18 lbs (80 N)
	axial	9 lbs (40 N)
Weight:		approx. 1 lbs (0.45 kg)
Protection:		IP65
Working temperature range:		-40 to +194 °F (-40 to +90 °C)[1]
Materials:		
	shaft/hollow shaft	stainless steel
	flange	aluminum
	housing	zinc die-cast
	cable	PVC
Shock resistance acc. to EN60068-2-27:		250 g (2500 m/s^2), 6 ms
Vibration resistance acc. to EN60068-2-6:		10 g (100 m/s^2), 55-200 Hz

[1] Cable version -22 to +194 °F (-30 to +90 °C), fixed installation

We reserve the right to make technical alterations without prior notice.

Incremental Type RI-60 (Shaft) / RI-61 (Hollow Shaft), SinCos

Electrical characteristics:

Power supply:	5 VDC (±5%) or 10-30 VDC
Current consumption (no load):	
5 VDC	70 mA max.
10-30 VDC	45 mA max.
Reverse polarity protection:	yes
RoHS compliant acc. to guideline 2011/65/EU	

SinCos interface:

Max. frequency -3dB:	400 kHz
Signal level:	1 Vpp (±10%)
Short circuit protected:	yes [2]
Pulse rate:	1024/2048 ppr

[2] Short circuit to 0V or to output, one channel at a time, power supply correctly applied

Standard Wiring:

Connection Type	Case Ground	Common (0 V)	+V	A	$\overline{A}$	B	$\overline{B}$
M12 Eurofast	Coupling Nut	1	2	3	4	5	6
Cable	Shield/Drain	WH	BN	GN	YE	GY	PK

Wiring Diagram:

Male Encoder View

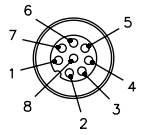

M12 Eurofast Pinout

Mating Cordset:
E-RKC 8T-930-*

* Length in meters.

We reserve the right to make technical alterations without prior notice.

Part Number Key: RI-60 Shaft Version

A	B	C		D	E		F
RI-60S	10	C	-	GA	1024	-	H1181

A	Type
RI-60S	Ø 58 mm, Shaft w/ Flat, IP67 Shaft Seal
RI-60T	Ø 58 mm, Shaft w/ Flat, IP65 Shaft Seal

B	Shaft (Ø x L)
10	Ø 10 mm x 20 mm

C	Flange
C	Ø 58 mm Clamping Flange

D	Voltage Supply and Output Type
GA	10-30 VDC, SinCos
GB	5 VDC, SinCos

E	Pulse Rate
1024, 2048	

F	Type of Connection
H1181	Radial 8-pin M12 Eurofast Connector
H1481	Axial 8-pin M12 Eurofast Connector
C1M	Radial Cable (1 m PVC)
CA1M	Axial Cable (1 m PVC)

Accessories:

- See page H1, Connectivity, for cables and connectors
- See page G1, Accessories, for mounting attachments and couplings

Incremental Type RI-60 (Shaft) / RI-61 (Hollow Shaft), SinCos

Part Number Key: RI-61 Hollow Shaft Version

A	B	C		D	E		F
RI-61H	10	E	-	GA	1024	-	H1181

A	Type
RI-61H	Ø 58 mm, Hollow Shaft, IP67 Shaft Seal
RI-61I	Ø 58 mm, Hollow Shaft, IP65 Shaft Seal

B	Bore
10	Ø 10 mm
1T	Ø 10 mm (Tapered Shaft)
12	Ø 12 mm
14	Ø 14 mm
15	Ø 15 mm
A1	Ø 3/8"
A3	Ø 1/2"

C	Flange
E	Ø 63 mm w/ Slotted Flex Mount
T	Flange w/ Torque Stop

D	Voltage Supply and Output Type
GA	10-30 VDC, SinCos
GB	5 VDC, SinCos

E	Pulse Rate
1024, 2048	

F	Type of Connection
H1181	Radial 8-pin M12 Eurofast Connector
C1M	Radial Cable (1 m PVC)
CT1M	Tangential Cable (1 m PVC)

We reserve the right to make technical alterations without prior notice.

Dimensions: RI-60 Shaft Version

RI-60 Flange C
Connection C & CA

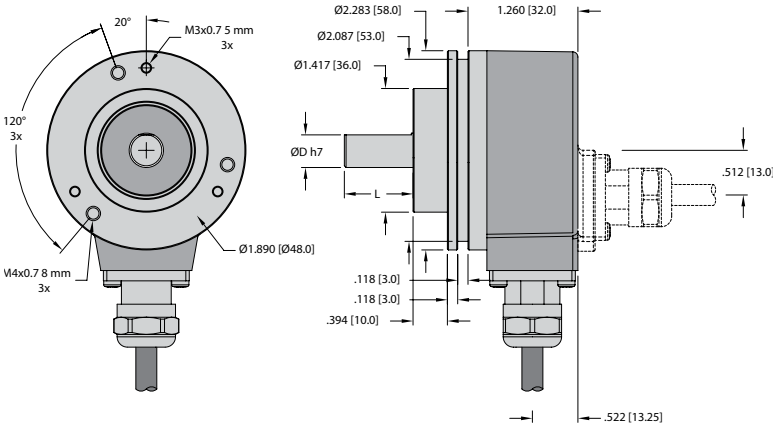

Accessories:

- See page H1, Connectivity, for cables and connectors
- See page G1, Accessories, for mounting attachments and couplings

Mounting advice:
The flanges and shafts of the encoder and drive should not be rigidly coupled together at the same time. We recommend the use of suitable couplings (see page G1, Accessories).

Incremental Type RI-60 (Shaft) / RI-61 (Hollow Shaft), SinCos

Dimensions: RI-61 Hollow Shaft Version

RI-61 Flange E
Connection H1181

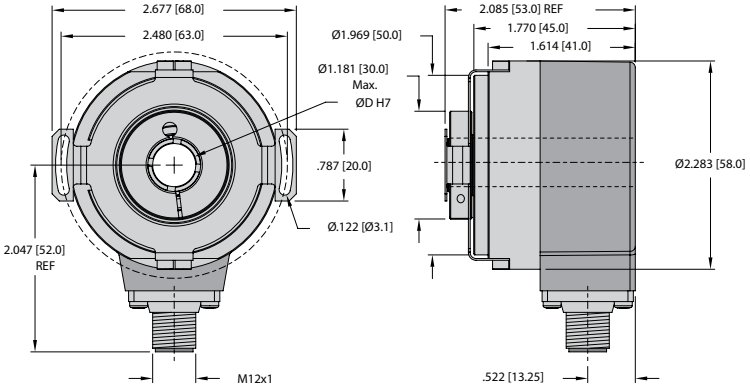

RI-61 Flange T
Connection H1181

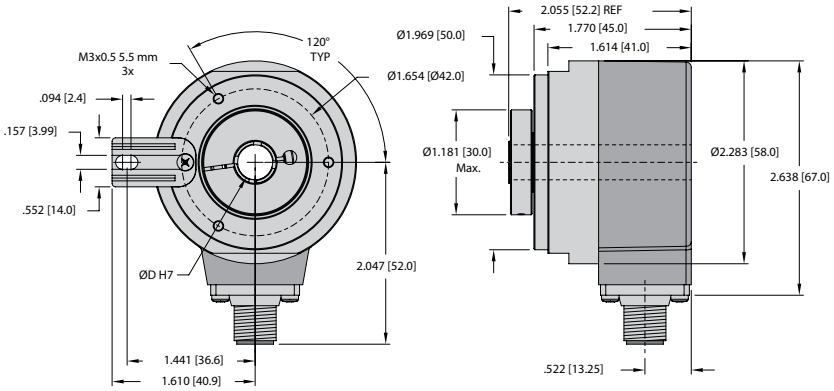

1) Torque stop recommendation: cylindrical pin DIN 7, Ø0.16 [4.0]

RI-61 Flange E (Bore 1T)
Connection CT

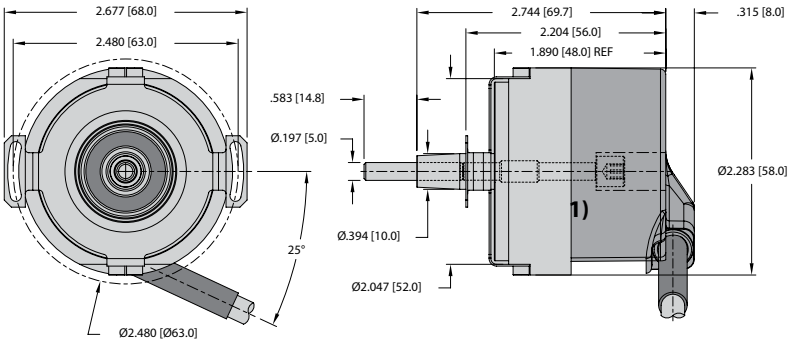

1) SW 4

We reserve the right to make technical alterations without prior notice.

Incremental Type RI-65 (Shaft) / RI-96 (Hollow Shaft), Stainless Steel

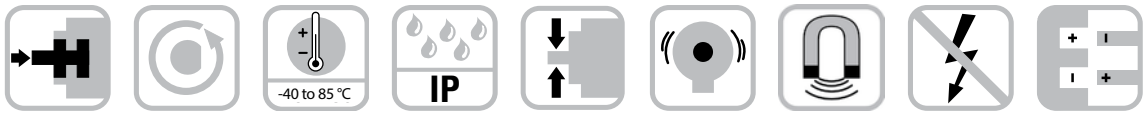

Bearing-Lock | High rotational speed | Temperature | High IP | High shaft load capacity | Shock/vibration resistant | Magnetic field proof | Short-circuit protected | Reverse polarity protection

Versatile

- **Reliable mounting in a wide variety of installation situations:** Comprehensive and proven mounting options.
- **Standard encoder for use worldwide:** compatible with ll US and European standards, supply voltage 5-30 VDC, various interface options, max. 5000 ppr.



Compact

- **Can be used even where space is tight:** outer diameter 50 mm, installation depth max. 47 mm.

Rugged

- Stays sealed even when subjected to harsh everyday use:
  – IP67 Protection
  – Rugged stainless-steel housing
  – Viton seals
  – High security against failures in the field, ideal for use in outdoor applications
- **Can be used in a wide temperature range:** -40 to +185 °F (-40 to +85 °C)
- **Increased ability to withstand vibration and installation errors:** Eliminates machine downtime and repairs. Sturdy double bearing lock design.

Mechanical Characteristics:

Speed [1]:	max. 6,000 RPM
Rotor moment of inertia:	approx. 0.098 oz-in² (1.8 x 10⁻⁶ kgm²)
Starting torque:	< 7 oz-in (< 0.05 Nm)
Weight:	approx. 0.9 lbs (0.4 kg)
Radial load capacity of the shaft:	18 lbs (80 N)
Axial load capacity of the shaft:	9 lbs (40 N)
Protection acc. to EN 60 529 with shaft sealing:	IP66/IP67

[1] For continuous operation 3,000 RPM

Working temperature:	-40 to +185 °F (-40 to +85 °C)
Materials:	Housing, flange, Shaft: 1.4305 (303) stainless steel Connector: stainless steel Seals: viton
Shock resistance acc. to EN 60068-2-27:	250 g (2,500 m/s²), 6 ms
Vibration resistance to EN 60068-2-6:	10 g (100 m/s²), 10-2,000 Hz

Electrical Characteristics:

Output circuit [Key Code]:	RS 422 [4A] (TTL compatible)	Push-Pull [2B]	Push-Pull [2F] (7272 compatible)
Supply voltage:	5 V ±5%	10-30 VDC	5-30 VDC
Power consumption (no load):	typ. 40 mA max. 90 mA	typ. 50 mA max. 100 mA	typ. 50 mA max. 100 mA
Permissible load/channel:	max. ±20 mA	max. ±20 mA	max. ±20 mA
Pulse frequency:	max. 300 kHz	max. 300 kHz	max. 300 kHz [3]
Signal level high:	min. 2.5 V	min. +V -1.0 V	min. +V -2.0 V
Signal level low:	max. 0.5 V	max. 0.5 V	max. 0.5 V
Rise time t_r:	max. 200 ns	max. 1 µs	max. 1 µs
Fall time t_f:	max. 200 ns	max. 1 µs	max. 1 µs
Short-circuit protected[1]:	yes [2]	yes	yes [2] [4]
Reverse polarity protection:	no	yes	no
UL approval	file E356899		
RoHS compliant acc. to EU guideline 2011/65/EU			

[1] If supply voltage correctly applied
[2] Only one channel allowed to be shorted-out:
(If +V=5 V, short-circuit to channel, 0 V, or +V is permitted.) (If +V=5-30 V, short-circuit to channel or 0 V is permitted.)
[3] Max. recommended cable length 30 m
[4] Approximately one minute

We reserve the right to make technical alterations without prior notice.

Incremental Type RI-65 (Shaft) / RI-96 (Hollow Shaft), Stainless Steel

Standard Wiring:

Connection Type	Case Ground	Common (0 V)	+V	A	$\overline{A}$	B	$\overline{B}$	Z	$\overline{Z}$
M12 Eurofast	Coupling Nut	1	2	3	4	5	6	7	8
Cable	Shield/Drain	WH	BN	GN	YE	GY	PK	BU	RD

Wiring Diagram:

Male Encoder View
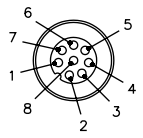 M12 Eurofast Pinout
Mating Cordset: **E-RKC 8T-930-***

* Length in meters.

Part Number Key: RI-65 Shaft Version

A	B	C		D	E		F
RI-65S	6	C	-	2B	360	-	H1181

A	Type
RI-65S	Ø 2" Shaft, IP67 Shaft Seal

B	Shaft (Ø x L)
6	Ø 6 mm x 10 mm
10	Ø 10 mm x 20 mm
A1	Ø 3/8" x 7/8"

C	Flange
C	Ø 58 mm Clamping Flange
S	Ø 58 mm Servo Flange
R	2.5" Square Flange

D	Voltage Supply and Output Type
2B	10-30 VDC, Push-Pull (w/ Inverted Signal)
2F	5-30 VDC, Push-Pull (w/ Inverted Signal)
4A	5 VDC, RS 422 (w/ Inverted Signal)

E	Pulse Rate
1, 5, 10, 12, 36, 100, 200, 250, 256, 360, 400, 500, 512, 600, 800, 1000, 1024, 1200, 2000, 2048, 2500, 3600, 4096, 5000 (e.g. 250 Pulses => 250) Other Pulse Rates Available on Request	

F	Type of Connection
H1181	Radial 8-pin M12 Eurofast Connector

Part Number Key: RI-96 Hollow Shaft Version

A	B	C		D	E		F
RI-96H	A0	E	-	2B	360	-	H1181

A	Type
RI-96H	Ø 2" Hollow Shaft, IP67 Shaft Seal

B	Bore
10	Ø 10 mm
12	Ø 12 mm
15	Ø 15 mm
A0	Ø 1/4"
A1	Ø 3/8"
A3	Ø 1/2"

C	Flange
E	Ø 63 mm w/ Slotted Flex Mount
T	Flange w/ Torque Stop

D	Voltage Supply and Output Type
2B	10-30 VDC, Push-Pull (w/ Inverted Signal)
2F	5-30 VDC, Push-Pull (w/ Inverted Signal)
4A	5 VDC, RS 422 (w/ Inverted Signal)

E	Pulse Rate
1, 5, 10, 12, 36, 100, 200, 250, 256, 360, 400, 500, 512, 600, 800, 1000, 1024, 1200, 2000, 2048, 2500, 3600, 4096, 5000 (e.g. 250 Pulses => 250) Other Pulse Rates Available on Request	

F	Type of Connection
H1181	Radial 8-pin M12 Eurofast Connector

Accessories:

- See page H1, Connectivity, for cables and connectors
- See page G1, Accessories, for mounting attachments and couplings

We reserve the right to make technical alterations without prior notice.

Incremental Type RI-65 (Shaft) / RI-96 (Hollow Shaft), Stainless Steel

Dimensions: RI-65 Shaft Version

RI-65 Flange S
Connection C

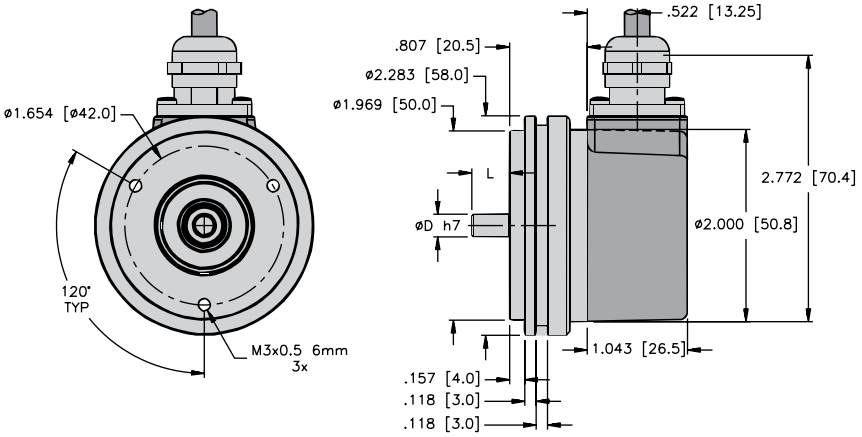

RI-65 Flange C
Connection H1181

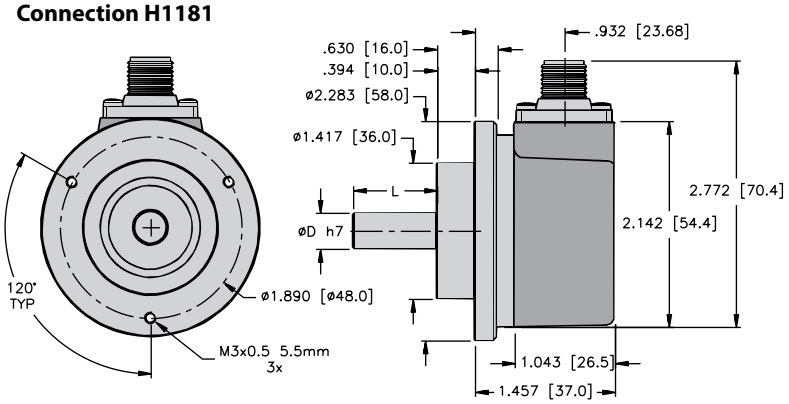

RI-65 Flange R
Connection H1181

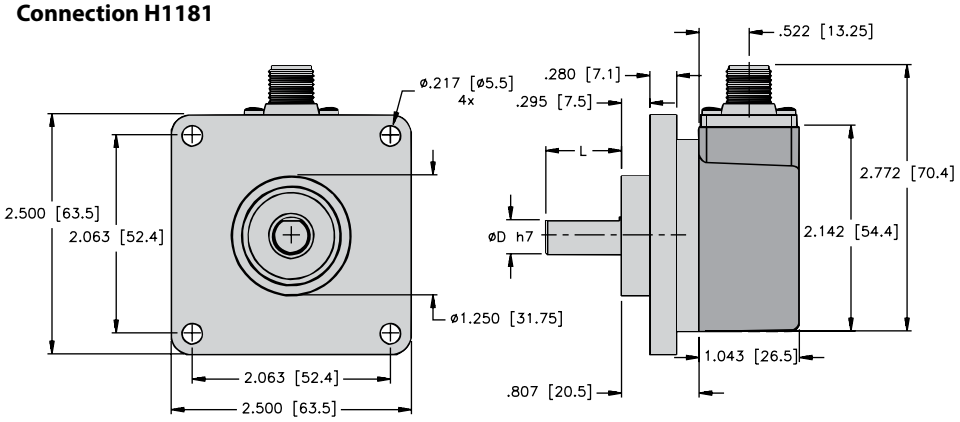

Mounting advice:
The flanges and shafts of the encoder and drive should not be rigidly coupled together at the same time. We recommend the use of suitable couplings (see page G1, Accessories).

We reserve the right to make technical alterations without prior notice.

Incremental Type RI-65 (Shaft) / RI-96 (Hollow Shaft), Stainless Steel

Dimensions: RI-96 Hollow Shaft Version

RI-96 Flange E
Connection H1181

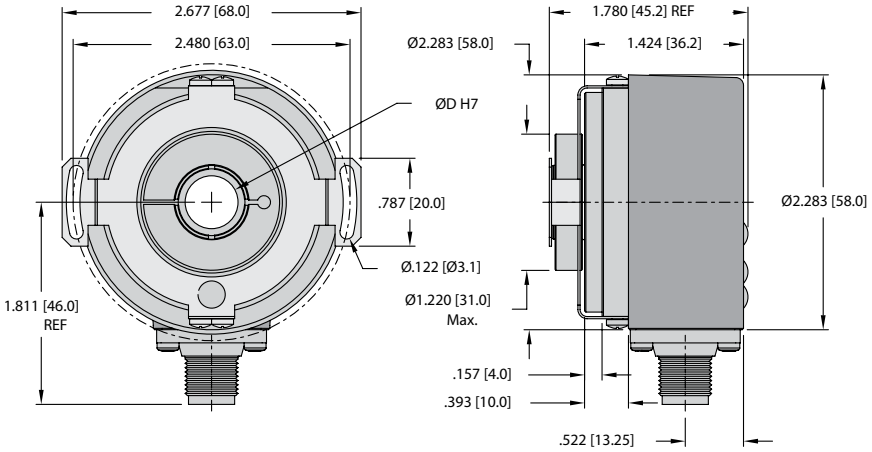

RI-96 Flange T
Connection H1181

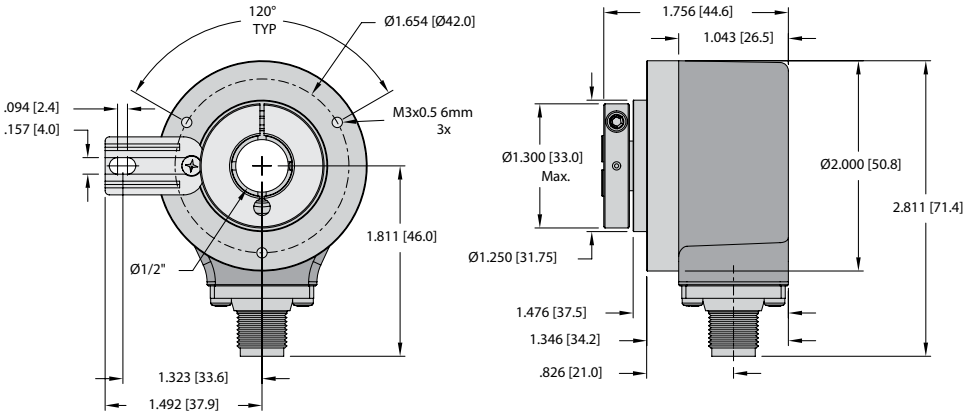

We reserve the right to make technical alterations without prior notice.

Turck Inc. | 3000 Campus Drive, Minneapolis, MN 55441 | T +1 800 544 7769 | F +1 763 553 0708 | www.turck.com

Incremental Type RI-16 (Shaft) / RI-64 (Hollow Shaft), High Resolution

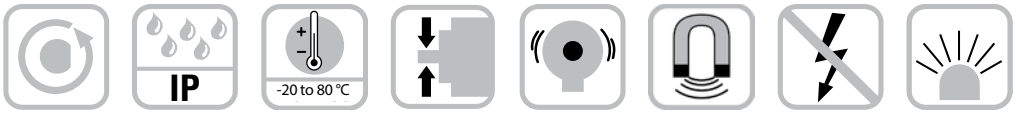

High rotational speed | High IP | Temperature | High shaft load capacity | Shock/vibration resistant | Magnetic field proof | Short-circuit protected | Optical sensor

High Performance
- High shaft loading capability
- Maximum speed up to 12000 revolutions per minute
- High IP protection up to max. IP66



Many Variants
- With RS422 or push-pull interface
- With cable or connector

Compact
- Ø 58 mm housing, industry standard

Mechanical Characteristics:

Speed:	Shaft IP65 Hollow Shaft IP40 Hollow Shaft IP66[1)]	12000 RPM 12000 RPM 6000 RPM
Moment of inertia:	Shaft version Hollow shaft version	approx. 0.098 oz-in2 (1.8 x 10-6 kgm2) approx. 0.328 oz-in2 (6 x 10-6 kgm2)
Starting torque at 68 °F (20 °C):		<1.4oz-in (0.01 Nm), IP40/IP65 <7oz-in (0.05 Nm), IP66
Radial load capacity of the shaft:		18 lbs (80 N)
Axial load capacity of the shaft:		9 lbs (40 N)
Weight:		approx. 0.9 lbs (0.4 kg)
Protection acc. to EN 60529 :		IP40, IP65, IP66
Working temperature:		-4 to +221 °F (-20 to +105 °C), IP40/IP65 -4 to +194 °F (-20 to +90 °C), IP66
Materials:	Shaft/hollow shaft	stainless steel
Shock resistance acc. to EN 60068-2-27:		approx. 100 g (1000 m/s2), 6 ms
Vibration resistance acc. to EN 60068-2-27:		approx. 10 g (100 m/s2), 10-2000 Hz

[1)] For continuous operation max 3000 RPM, ventilated

We reserve the right to make technical alterations without prior notice.

Incremental Type RI-16 (Shaft) / RI-64 (Hollow Shaft), High Resolution

Electrical Characteristics:

Output circuit [Key Code]:	RS 422 [4A/4C] (TTL compatible)	Push-Pull [2B]
Supply voltage:	5 VDC (±5 %) or 10-30 VDC	10-30 VDC
Power consumption (no load):	typ. 70 mA / max. 120 mA	typ. 115 mA / max. 160 mA
Permissible load/channel:	max. ±20 mA	max. ±30 mA
Pulse frequency:	max. 800 kHz	max. 600 kHz
Signal level high:	min. 2.5 V	min. +V -2.5 V
Signal level low:	max. 0.5 V	max. 2.0 V
Rise time t_r:	max. 200 ns	max. 1 µs
Fall time t_f:	max. 200 ns	max. 1 µs
Short-circuit protected:	yes [1)]	yes
Reverse polarity protection:	5 VDC: No, 10-30 VDC: yes	yes
UL approval:	file E356899	
RoHS compliant acc. to EU guideline 2011/65/EU		

[1)] Only one channel allowed to be shorted-out: (If +V = 5 V, short-circuit to channel, 0 V, or +V is permitted) (If +V = 10-30 V, short-circuit to channel or 0 V is permitted)

Standard Wiring:

Connection Type	Case Ground	Common (0 V)	+V	A	$\overline{A}$	B	$\overline{B}$	Z	$\overline{Z}$	-	-	Com / Sensor	+V Sensor
M23 Multifast	Coupling Nut	10	12	5	6	8	1	3	4	-	-	11	2
M12 Eurofast	Coupling Nut	1	2	3	4	5	6	7	8	-	-	-	-
Cable	Shield/Drain	WH	BN	GN	YE	GY	PK	BU	RD	BK	VT	GY/PK	RD/BU

Wiring Diagrams:

Male Encoder View	
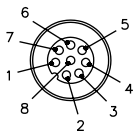	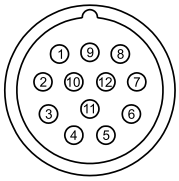
M12 Eurofast pinout	M23 Multifast pinout
Mating cordset: **E-RKC 8T-930-***	Mating cordset: **E-CKM 12-931-***

* Length in meters.

We reserve the right to make technical alterations without prior notice.

Incremental Type RI-16 (Shaft) / RI-64 (Hollow Shaft), High Resolution

Part Number Key: RI-16 Shaft Version

A	B	C		D	E		F
RI-16T	6	C	-	2B	6000	-	H1181

A	Type
RI-16T	Ø 58 mm, Shaft w/ Flat, IP65 Shaft Seal

B	Shaft (Ø x L)
6	Ø 6 mm x 10 mm
10	Ø 10 mm x 20 mm

C	Flange
C	Ø 58 mm Clamping Flange
S	Ø 58 mm Servo Flange

D	Voltage Supply and Output Type
2B	10-30 VDC, Push-Pull (w/ Inverted Signals)
4A	5 VDC, RS422 (w/ Inverted Signals)
4C	10-30 VDC, RS422 (w/ Inverted Signals)

E	Pulse Rate
6000, 7200, 8000, 8192, 9000, 10000, 18000, 36000 Other Pulse Rates Available on Request	

F	Type of Connection
H1181	Radial 8-pin M12 Eurofast Connector
H1481	Axial 8-pin M12 Eurofast Connector
12M23	Radial 12-pin M23 Multifast Connector
12M23A	Axial 12-pin M23 Multifast Connector
C1M	Radial Cable (1 m PUR)
CA1M	Axial Cable (1 m PUR)

Part Number Key: RI-64 Hollow Shaft Version

A	B	C		D	E		F
RI-64B	6	T	-	2B	6000	-	H1181

A	Type
RI-64B	Ø 58 mm, Blind Hollow Shaft, IP66 Shaft Seal
RI-64C	Ø 58 mm, Blind Hollow Shaft, IP40 Shaft Seal
RI-64H	Ø 58 mm, Hollow Shaft, IP66 Shaft Seal
RI-64I	Ø 58 mm, Hollow Shaft, IP40 Shaft Seal

B	Bore (30 mm max insertion depth for blind hollow shaft)
6	Ø 6 mm
8	Ø 8 mm
10	Ø 10 mm
12	Ø 12 mm

C	Flange
T	Ø 58 mm Flange w/ Torque Stop
E1	Ø 65 mm Flange w/ Flex Mount

D	Voltage Supply and Output Type
2B	10-30 VDC, Push-Pull (w/ Inverted Signals)
4A	5 VDC, RS422 (w/ Inverted Signals)
4C	10-30 VDC, RS422 (w/ Inverted Signals)

E	Pulse Rate
6000, 7200, 8000, 8192, 9000, 10000, 18000, 36000 Other Pulse Rates Available on Request	

F	Type of Connection
H1181	Radial 8-pin M12 Eurofast Connector
12M23	Radial 12-pin M23 Multifast Connector
C1M	Radial Cable (1 m PVC)

Accessories:

- See page H1, Connectivity, for cables and connectors
- See page G1, Accessories, for mounting attachments and couplings

We reserve the right to make technical alterations without prior notice.

Incremental Type RI-16 (Shaft) / RI-64 (Hollow Shaft), High Resolution

Dimensions: RI-16 Shaft Version

RI-16 Flange C
Connection 12M23 & 12M23A

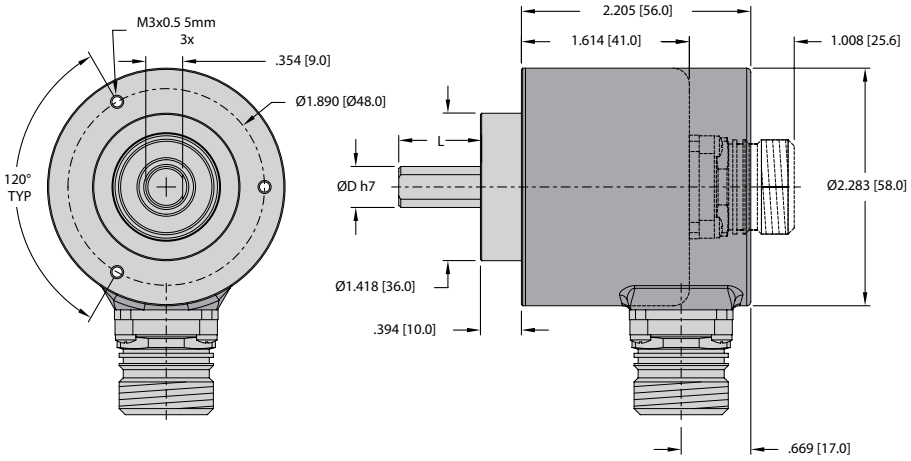

RI-16 Flange S
Connection C1M & CA1M

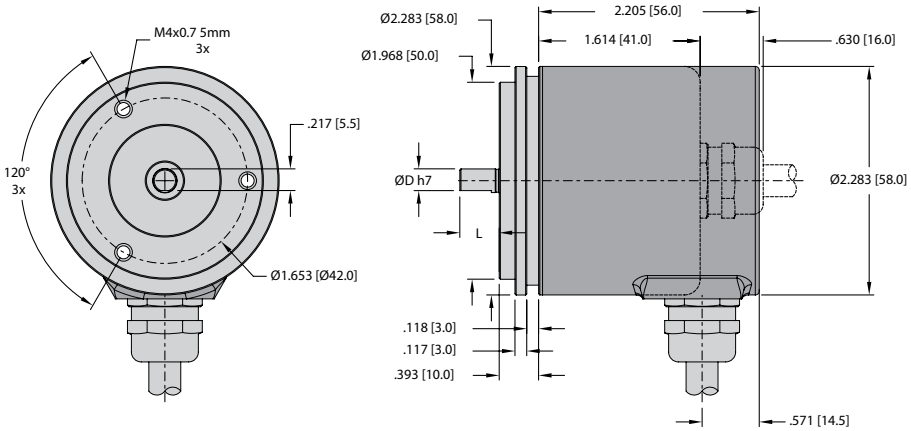

Mounting advice:
The flanges and shafts of the encoder and drive should not be rigidly coupled together at the same time. We recommend the use of suitable couplings (see page G1, Accessories).

We reserve the right to make technical alterations without prior notice.

Turck Inc. | 3000 Campus Drive, Minneapolis, MN 55441 | T +1 800 544 7769 | F +1 763 553 0708 | www.turck.com

Incremental Type RI-16 (Shaft) / RI-64 (Hollow Shaft), High Resolution

Dimensions: RI-64 Hollow Shaft Version

RI-64 Flange T
Connection C

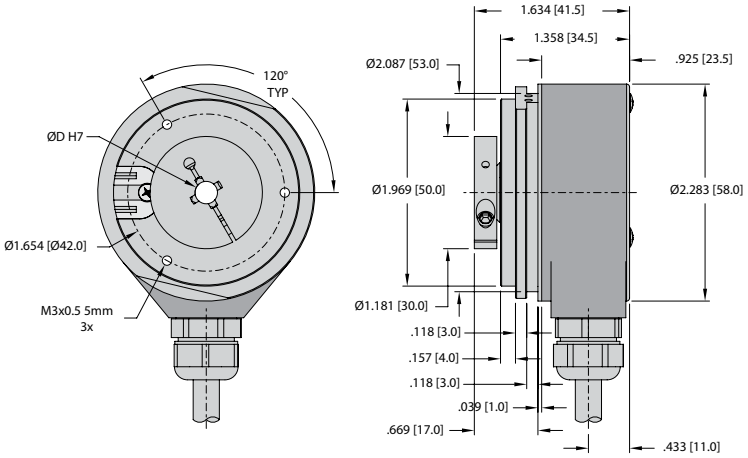

- - - - Axial Cable
——— Radial Cable

RI-64 Flange E1
Connection 12M23

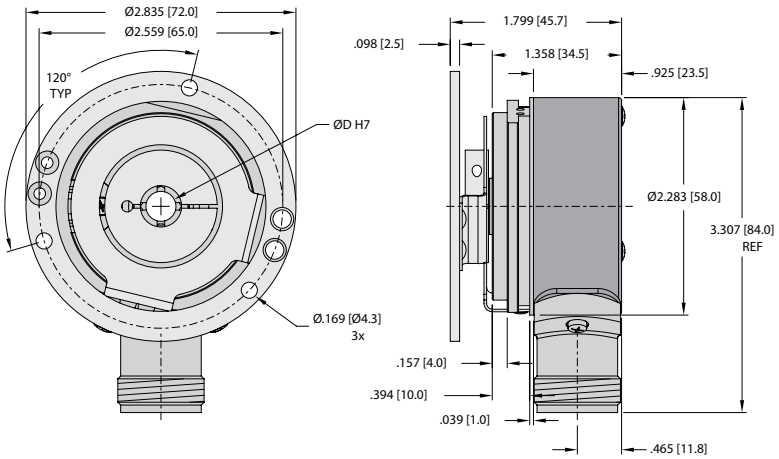

Mounting advice:
The flanges and shafts of the encoder and drive should not be rigidly coupled together at the same time. We recommend the use of suitable couplings (see page G1, Accessories).

We reserve the right to make technical alterations without prior notice.

Large Bore Type RI-43 (Hollow Shaft)



Rugged
- Balanced, stainless-steel clamping rings, special bearing-shaft connection increases stability and vibration resistance.
- Optional plastic isolating inserts protect against damage from shaft currents.
- New type of mechanical construction, ideal for handling tough mechanical stresses and strains.

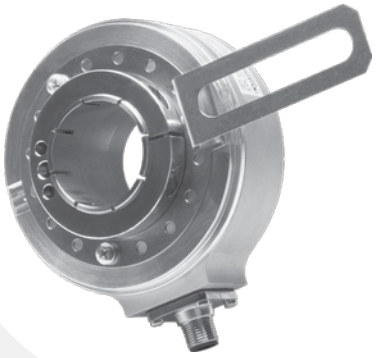

Economical
- Alternative to traditional heavy duty encoders that are often over-engineered and expensive.

Versatile
- Very compact. Optional isolating inserts protect against damage from shaft currents, e.g. with AC vector motors.
- Only 49 mm clearance needed.
- Hollow shaft diameter up to Ø 42 mm.
- RS422, push-pull or SIN/COS outputs.
- Extended speed range up to 6,000 RPM.
- High-quality construction, balanced, stainless steel ensures quiet vibration-free running.

Mechanical Characteristics:

Speed:	max. 6,000 RPM at 158 °F (70 °C) [1] max. 3,500 RPM at 176 °F (80 °C) [1]
Rotor moment of inertia:	< 12 oz-in² (< 220 x 10-6 kgm²) [2]
Starting torque with sealing:	< 28.3 oz-in (< 0.2 Nm)
Weight:	approx. 1.8 lbs (0.8 kg)
Protection acc. to EN 60 529:	IP65
Working temperature:	-40 to +176 °F (-40 to +80 °C) [3]
Materials: Housing: Flange: Shaft:	 die-cast aluminium stainless steel
Shock resistance acc. to DIN-IEC 68-2-27	200 g (2,000 m/s²), 6 ms
Vibration resistance acc. to DIN-IEC 68-2-6:	10 g (100 m/s²), 10-2,000 Hz

[1] During the run-in-phase of approx. 2 hours, reduce the limits for working temperature max or speed max by 1/3
[2] Dependent on the shaft diameter
[3] With connectors, -40 °C, cable securely installed; -30 °C, cable flexibly installed; -20 °C

Electrical Characteristics Sine Wave Output:

Output circuit [Key Code]:	SinCos [AB] U = 1 Vpp (±20%)	SinCos [AA] U = 1 Vpp (±20%)
Supply voltage:	5 VDC (±5%)	10-30 VDC
Current consumption (no load) with inverted signal:	typ. 65 mA / max. 110 mA	typ. 65 mA / max. 110 mA
-3 dB frequency:	< 180 kHz	< 180 kHz
Signal level channels A/B:	1 Vpp (±20%)	1 Vpp (±20%)
Signal level channel 0:	0.1-1.2 V	0.1-1.2 V
Short-circuit protected [1]	yes	yes
Reverse polarity protection:	no	yes
UL approval:	file E356899	

RoHS compliant acc. to EU guideline 2011/65/EU

[1] If supply voltage correctly applied

We reserve the right to make technical alterations without prior notice.

Turck Inc. | 3000 Campus Drive, Minneapolis, MN 55441 | T +1 800 544 7769 | F +1 763 553 0708 | www.turck.com

Large Bore Type RI-43 (Hollow Shaft)

Electrical Characteristics RS422 or Push-Pull Output:

Output circuit [Key Code]:	RS 422 [4A/4B/4C] (TTL compatible)	Push-Pull [1B/2B/2E]	Push-Pull [2F] (7272 compatible) [3]
Supply voltage:	5 VDC (+/-5%) 5-30 VDC 10-30 VDC	5-30 VDC 10-30 VDC	5-30 VDC
Power consumption (no load) without inverted signal:	-	typ. 55 mA / max. 125 mA	-
Power consumption (no load) with inverted signal:	typ. 40 mA / max. 90 mA	typ. 80 mA / max. 150 mA	typ. 50 mA / max. 100 mA
Permissible load/channel:	max. ±20 mA	max. ±30 mA	max. ±20 mA
Pulse frequency:	max. 300 kHz	max. 300 kHz	max. 300 kHz
Signal level high:	min. 2.5 V	min. +V -3 V	min. +V -2.0 V
Signal level low:	max. 0.5 V	max. 2.5 V	max. 0.5 V
Rise time t_r:	max. 200 ns	max. 1 µs	max. 1 µs
Fall time t_f:	max. 200 ns	max. 1 µs	max. 1 µs
Short-circuit protected [1]:	yes	yes	yes
UL approval	file E356899		
Reverse polarity protection:	no, 10-30 VDC: yes	yes	no

[1] If supply voltage correctly applied
[2] Only one channel allowed to be shorted-out:
(If +V = 5 VDC, short-circuit to channel, 0 V, or +V is permitted) (If +V = 5-30 VDC, short-circuit to channel or 0 V is permitted)
[3] Max. recommended cable length 30 m

Standard Wiring:

Connection Type	Case Ground	Common (0 V)	+V	A	$\overline{A}$	B	$\overline{B}$	Z	$\overline{Z}$	-	-	OV Sensor	+V Sensor
M23 Multifast	Coupling Nut	10	12	5	6	8	1	3	4	-	-	11	2
MS 10-pin	J	F	D	A	G	B	H	C	I	-	-	-	-
M12 Eurofast	Coupling Nut	1	2	3	4	5	6	7	8	-	-	-	-
Cable	Shield/Drain	WH	BN	GN	YE	GY	PK	BU	RD	BK	VT	GY/PK	RD/BU

Individually isolate unused outputs before inital start up.

Special Pin Configuration:

		Connection Type	Case Ground	Common (0 V)	+V	A	$\overline{A}$	B	$\overline{B}$	Z	$\overline{Z}$	-	-
Output Code	N41	M12 Eurofast	Coupling Nut	7	2	1	3	4	5	6	8	-	-
	N40	MS 10-pin	G	F	D	A	H	B	I	C	J	-	-

Wiring Diagrams:

Male Encoder View		
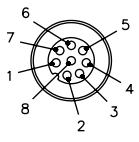	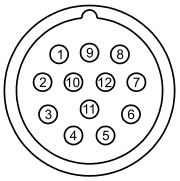	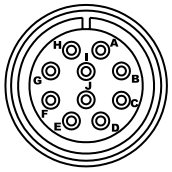
M12 Eurofast Pinout	M23 Multifast Pinout	MS Pinout (10-pin)
Mating Cordset: **E-RKC 8T-930-***	Mating Cordset: **E-CKM 12-931-***	Mating Cordset: **E-MK 10-931-***

* Length in meters.

We reserve the right to make technical alterations without prior notice.

Large Bore Type RI-43 (Hollow Shaft)

Part Number Key: RI-43 Hollow Shaft Version

A	B	C		D	E		F		G/H/I
RI-43H	20	E2	-	1B	50	-	H1181	/	Specials

A	Type
RI-43H	Ø 100 mm, Hollow Shaft, IP65 Shaft Seal

B	Bore
20	Ø 20 mm [1)]
24	Ø 24 mm
25	Ø 25 mm [1)]
28	Ø 28 mm
30	Ø 30 mm [1)]
32	Ø 32 mm [2)]
35	Ø 35 mm
38	Ø 38 mm
40	Ø 40 mm
42	Ø 42 mm
A3	Ø 1/2" [2)]
A4	Ø 5/8" [1)]
A5	Ø 3/4" [2)]
A6	Ø 1" [1)]
A7	Ø 1-1/8" [2)]
A8	Ø 1-1/4" [1)]

[1)] Bores Available with Isolation Inserts.
[2)] Only Available with an Isolation Insert.

C	Flange
E2	4 -1/2" C-Face Tether
S	Face Mount
S4	Long Anti-Rotation Spring
S5	Short Anti-Rotation Spring
S8	Long Tether Arm

D	Voltage Supply and Output Type
1B	10-30 VDC, Push-Pull
2B	10-30 VDC, Push-Pull (w/ Inverted Signals)
2E	5-30 VDC, Push-Pull (w/ Inverted Signals)
2F	5-30 VDC, Push-Pull (7272 compatible w/ Inverted Signals)
4A	5 VDC, RS422 (w/ Inverted Signals)
4B	5-30 VDC, RS422 (w/ Inverted Signals)
4C	10-30 VDC, RS422 (w/ Inverted Signals)
AA	10-30 VDC[3)], SIN/COS, 1 Vpp (w/ Inverted Signals)
AB	5 VDC [3)], SIN/COS, 1 Vpp (w/ Inverted Signals)

[3)] N24 is the Only Valid Special Output Code for SIN/COS Outputs.

E	Pulse Rate
	50*,360*, 512*, 600*, 1000*, 1024, 1500, 2000, 2048, 2500, 4096, 5000 (e.g. 360 Pulses => 360) Other Pulse Rates Available on Request

* SIN/COS Version not Available with Pulses < 1024

F	Type of Connection
H1181	Radial 8-pin M12 Eurofast Connector
12M23	Radial 12-pin M23 Multifast Connector
10MIL	Radial 10-pin MS Connector
C1M	Radial Cable (1 m PVC)

G	Special Output Signal Formats
	See N21 thru N33 on Page E38

H	Special Insert Options
N42	Isolation Insert Included [4)]

[4)] Includes Plastic Hollow Shaft Inserts for Electrical Isolation.

I	Special Connector Pin Configuration
	See N40 or N41 on Page E29

We reserve the right to make technical alterations without prior notice.

Large Bore Type RI-43 (Hollow Shaft)

Dimensions: RI-43 Hollow Shaft Version

RI-43 Flange S8/E2
Connection H1181

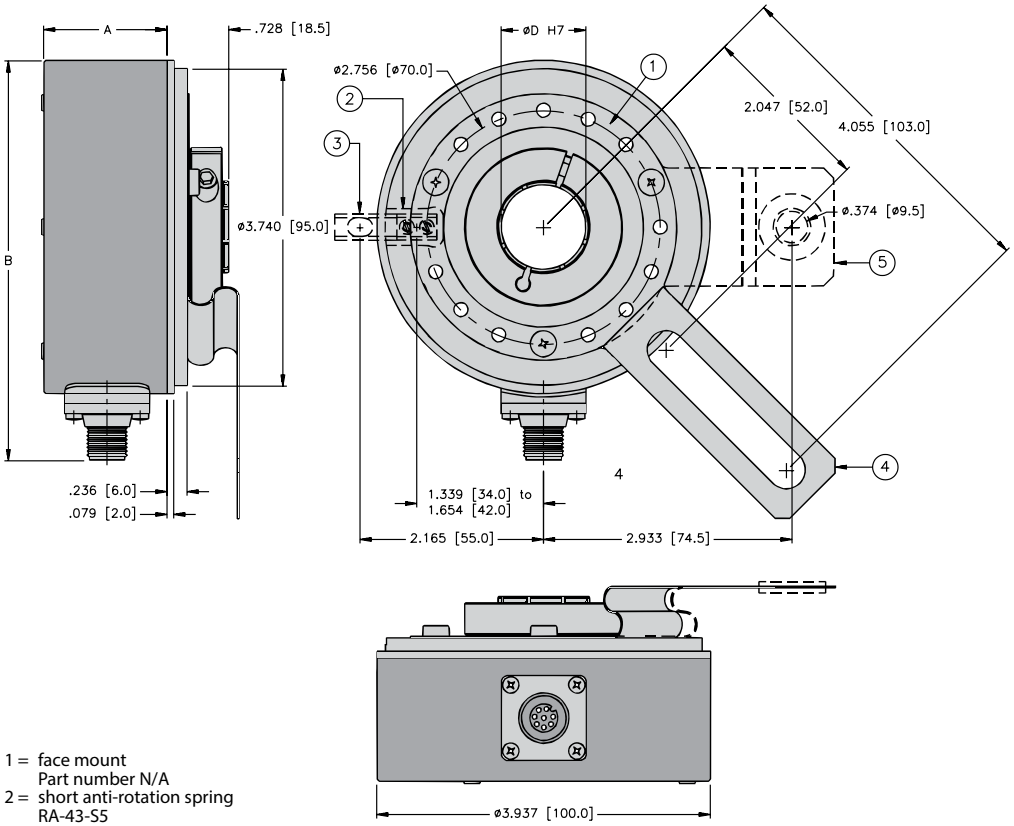

1 = face mount
Part number N/A
2 = short anti-rotation spring
RA-43-S5
3 = long anti-rotation spring
RA-43-S4
4 = tether arm (long)
RA-43-S8
5 = 4 1/2" C-face tether
RA-43-E2

Dimensions for Radial Connector - in [mm]

	Connection Style			
DIM	**Cable**	**M12**	**M23**	**MS** (10-pin)
A	1.181 [30.0]	1.181 [30.0]	1.181 [30.0]	1.457 [37.0]
B	-	4.705 [119.5]	4.961 [126.0]	5.394 [137.0]

We reserve the right to make technical alterations without prior notice.

Large Bore Type RI-43 (Hollow Shaft)

Mating Shaft Requirements:

Type of Flange	Axial End Play	Radial Runout	Angular Offset
S5 (anti-rotational spring short)	max. ±1 mm	max. ±0.3 mm	max. ±2°
S4 (anti-rotational spring long)	max. ±1 mm	max. ±0.3 mm	max. ±2°
S8 (tether arm long)	max. ±0.5 mm	max. ±0.3 mm	max. ±2°
E2 (C-face tether)	max. ±0.5 mm	max. ±0.3 mm	max. ±2°

Mounting:

Mounting using the spring element - short:

When mounting the encoder, ensure that dimension **L** is larger than the maximum axial play of the drive in the direction of the arrow.

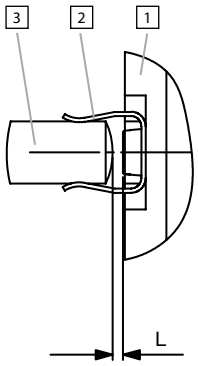

1 Flange
2 Spring element - short
3 Cylindrical pin

Mounting using the spring element - long:

Cylindrical pin fed through the bore of the spring.

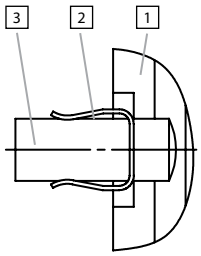

1 Flange
2 Spring element - short
3 Cylindrical pin

Large Bore Type RI-43 (Hollow Shaft) Accessories

Isolation Insert





Part Number:	Inner Dimensions
RSA-A3	12.7 mm (1/2")
RSA-A4	15.875 mm (5/8")
RSA-12	12 mm
RSA-14	14 mm
RSA-15	15 mm
RSA-16	16 mm
RSA-18	18 mm
RSA-A5	19.05 mm (3/4")
RSA-20	20 mm
RSA-25	25 mm
RSA-A6	25.4 mm (1")
RSA-A7	28.58 mm (1-1/8")
RSA-30	30 mm
RSA-A8	31.75 mm (1-1/4")
RSA-32	32 mm

The RI-43 encoder is used for AC vector motor and general industrial applications. For AC vector motor applications, the encoder should be electrically isolated from the motor chassis to minimize encoder bearing currents and ground noise. An isolation insert for the hollow shaft is provided with the encoder by specifying N42 in the "special insert option" decode. **When ordering isolation inserts separately, choose option 38 with a bore diameter of 38 mm.**

For general industrial applications, isolation is not required and the decode for "special insert options" can be left blank.

Isolation insert for hollow shaft Ø 42 mm:
External diameter 42 mm
Internal diameter 38 H7 in accordance with ISO 286-2
Order Number: RSA-38

We reserve the right to make technical alterations without prior notice.

Large Bore Type RI-43 (Hollow Shaft) Accessories

Part Number:
ENCODER COVER KIT

Description:
Cover kit for 4.5" C-face motors

Included: (3) 3/8 x 16 x 3/4 bolts, (3) washers



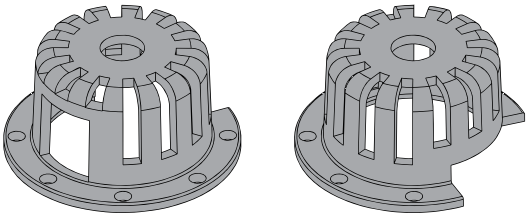

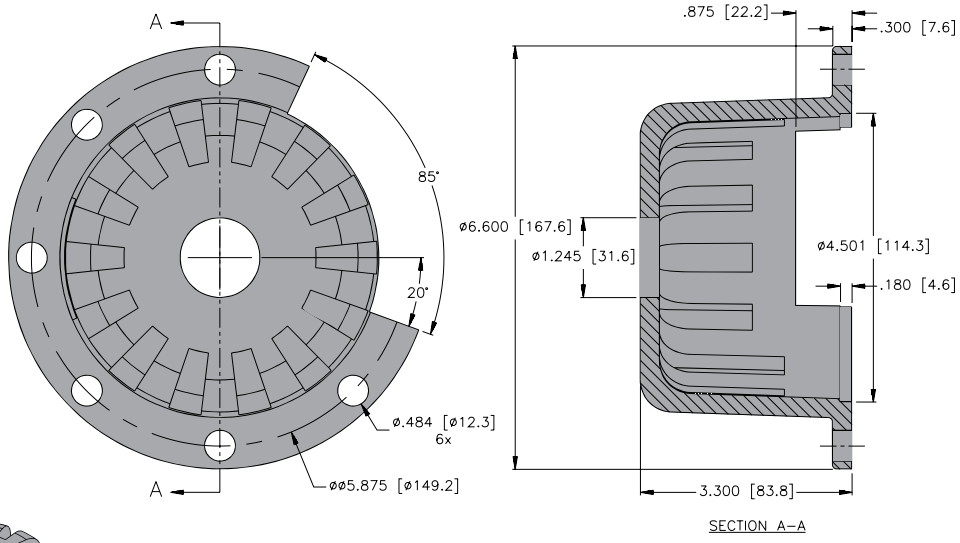

Part Number:
RSA-TAPER

Description:
Mounting kit adapts the RI-43 hollow shaft encoder for mounting onto a tapered shaft. Tapered shafts are used for high-precision direct coupling to devices. An isolating insert is also included in the mounting kit; this reliably protects the encoder from shaft currents.

Included: Insert for cone blind hole, cone 1:10, 17 mm length, isolation insert, allen screw for tightening

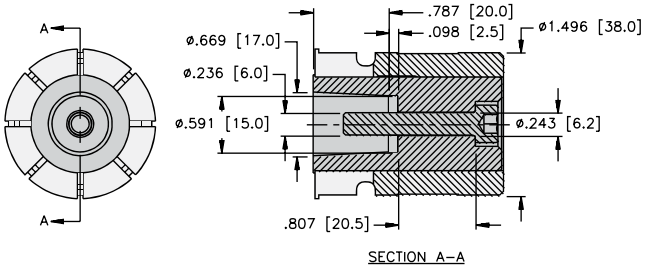



We reserve the right to make technical alterations without prior notice.

Wave Forms

Outputs

All Turck encoders come standard with six channels, where A leads B in the clockwise direction and the standard index is gated with A & B. The tolerance of the wave form affects the control, and in some cases it may affect the smoothness of system operation.

Wave Form Tolerances

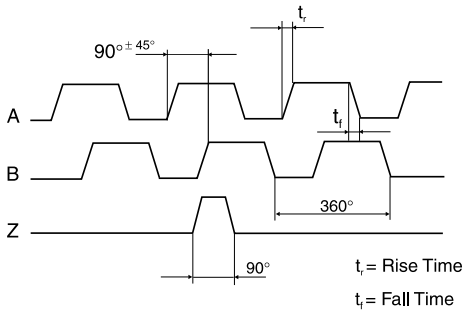

A leads B when the shaft is turned in the clockwise direction viewing the shaft or collet end. This is Turck's standard. This format applies to the pin key codes listed below.	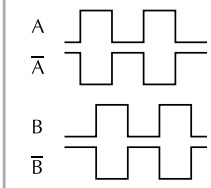	B leads A when the shaft is rotated in the clockwise direction viewing the shaft or collet end. This format applies to the pin key codes listed below.	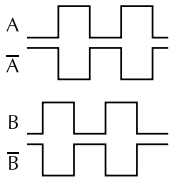
A leads B, Z gated with A & B. This is Turck's standard. Z is 90° wide.	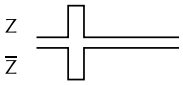	**Code N24:** B leads A, Z gated with A & B. Z is 90° wide.	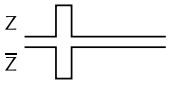
Code N21: A leads B, Z gated with B. Z is 180° wide.	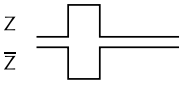	**Code N25:** B leads A, Z gated with B. Z is 180° wide.	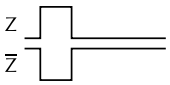
Code N22: A leads B, Z gated with A. Z is 180° wide.	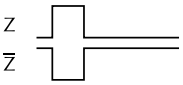	**Code N26:** B leads A, Z gated with A. Z is 180° wide.	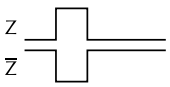
Code N23: A leads B, Z ungated. Z is 330° to 360° wide.	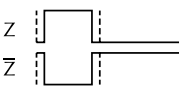	**Code N27:** B leads A, Z is ungated. Z is 330° to 360° wide.	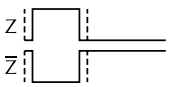
Code N28: A leads B, Z is 180° wide.	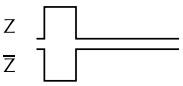	**Code N29:*** B leads A, Z gated with $\overline{B}$. Z is 180° wide.	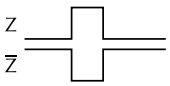
Code N33:* A leads B, Z gated with $\overline{B}$. Z is 180° wide.	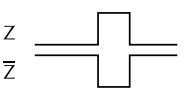	**Code N30:** B leads A, Z is a negative marker gated with B. Z is 180° wide.	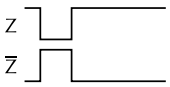
Code N31: A leads B, Z is a minimum with of 270° (electrical degrees).	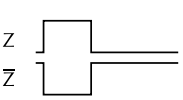	**Code N32:** B leads A. Z has a minimum width of 270°.	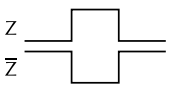

Note: * For RI-10/12/65 encoders, Z is 160° Wide

We reserve the right to make technical alterations without prior notice.

Turck Inc. | 3000 Campus Drive, Minneapolis, MN 55441 | T +1 800 544 7769 | F +1 763 553 0708 | www.turck.com

Magnetic Ring Assembly Type RMK-2


High rotational speed



High IP


Shock/vibration resistant


Reverse polarity protection

Robust
- **High shock and vibration resistance.**
- **Sturdy housing with IP67 protection. Option: special housing for maximum resistance against condensation (IP68 / IP69K, resistance to cyclic humidity acc. to EN 60068-3-38 as well as damp heat acc. to EN 60068-3-78).**
- **Non-contact measuring system, free from wear, ensures a long service life.**



RoHS compliant

Compact
- **Requires very little installation space Bore sizes available up to 30 mm.**

Simple Installation
- **Large mounting tolerance between magnetic band and sensor head.**
- **Slotted hole mounting ensures simple alignment.**
- **Function display via LED.**

Mechanical characteristics:

Max speed:		12000 rpm
Protection:		
	Q10	IP67 acc. to EN 60529
	P10	IP68 / IP69K acc. to EN 60529, DIN 40050-9 and humidity tested acc. to EN 60068-3-38, EN 60068-3-78
Working temperature:		-4 to +176 °F [-20 to +80 °C]
Shock resistance:		500 g (5000 m/s²), 1 ms
Vibration resistance:		30 g (300 m/s²), 10-2000 Hz
Pole gap:		2 mm from pole to pole
Housing (sensor head):		aluminum
Cable:		2 m [6.56'] long, PUR 8 x 0.14 mm² [AWG 26], shielded, may be used in flexing cable installations
Status LED:		
	green	pulse index
	red	error; speed too high or magnetic fields too weak

RoHS compliant acc. to guideline EU 2011/65/EU

We reserve the right to make technical alterations without prior notice.

Magnetic Ring Assembly Type RMK-2

Electrical characteristics:

Output circuit [Key Code]:		Push-Pull [2R]		RS422 [4K]		
Power supply:		4.8 - 30 VDC		4.8 - 26 VDC		
Power consumption (no load):		typ. 25 mA max. 60 mA		typ. 25 mA max. 60 mA		
Permissible load/channel:		±20 mA		120 ohm		
Min. pulse edge interval:				1 µs		
Signal level:						
	High	min. +V - 2.0 V		min. 2.5 V		
	Low	max. 0.5 V		max. 0.5 V		
Reference signal:		index periodical [1]				
System accuracy:		typ. 0.3° with shaft tolerance g6				
Pulse rate [ppr] [2]:		250,360	1000	1024	2500	3600
	max speed rpm	12000	2400	7000	3900	2700

[1] At every pole change. The signal is generated by the sensor.
[2] With an input frequency of the evaluation unit of 250kHz.

Signal Figures:

With rotation of the magnetic ring in the CW-direction (see draft "Permissible Mounting tolerances").

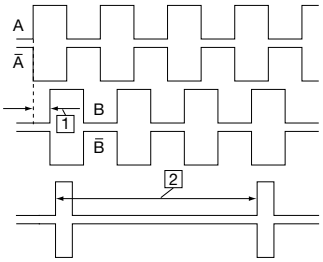

1 Min. pulse interval: pay attention to the instructions in the technical data

2 Periodic index signal (every 2 mm); the logical assignment A, B and 0-signal can change

Standard Wiring:

Connection Type:	Common (0V)	+V	A	Ā	B	B̄	0	0̄	⏚
Cable:	WH	BN	GN	YE	GY	PK	BU	RD	shield[3]

[3] Shield is attached to sensor housing.

Part Number Key: RMK-2

A		B		C		D	E		F
RMK-2	-	P10	-	8	-	2R	250	-	C

A	Type
RMK-2	Rotary Magnetic, 2 mm Pole Gap

B	Housing
P10	10 mm, IP68/IP69K
Q10	10 mm, IP67

C	Bore
8	8 mm
10	10 mm
12	12 mm
15	15 mm
18	18 mm
20	20 mm
25	25 mm [1]
30	30 mm [1]
A1	3/8"
A4	5/8"
A6	1" [1]

[1] Only available with Pulse Rate '360' or '3600'

D	Voltage Supply and Output Type
2R	4.8-30 VDC, Push-Pull
4K	4.8-26 VDC, RS422

E	Pulse Rate
	250, 360, 1000, 1024, 2500, 3600

F	Type of Connection
C	Cable (2 m PUR)

Accessories:

- See page H1, Connectivity, for cables and connectors
- See page G1, Accessories, for mounting attachments and couplings

We reserve the right to make technical alterations without prior notice.

Turck Inc. | 3000 Campus Drive, Minneapolis, MN 55441 | T +1 800 544 7769 | F +1 763 553 0708 | www.turck.com

Magnetic Ring Assembly Type RMK-2

Mounting orientation and permissible mounting tolerances

Dimensions: RMK-2

Distances

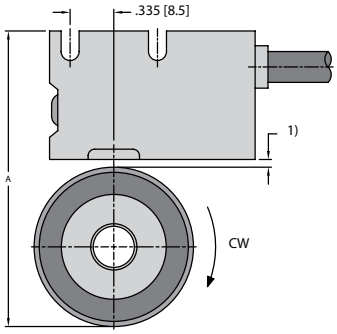

1) Distance sensor head / magnetic ring:
0.004-0.04 [0.1-1.0] (0.02 [0.4] recommended)

Torsion

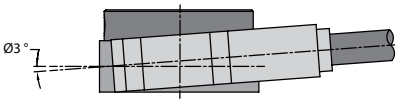

Offset

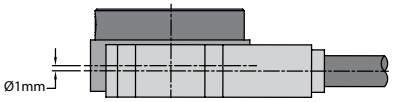

Tilting

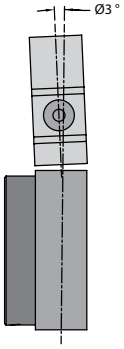

Pulse rate	A for distance sensor head / magnetic ring = 0.02 [0.4]
250, 1000, 2500	2.22 [56.4]
1024	2.62 [66.6]
360, 3600	2.77 [70.4]

Dimensions: RMK-2

Sensor head

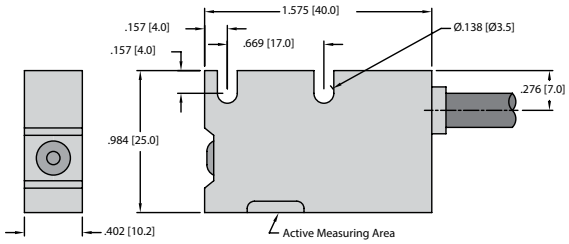

Magnetic Ring for pulse rate: 250, 1000 or 2500

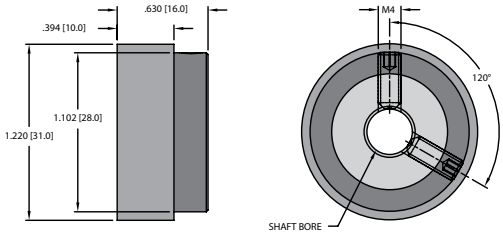

Magnetic Ring for pulse rate: 1024

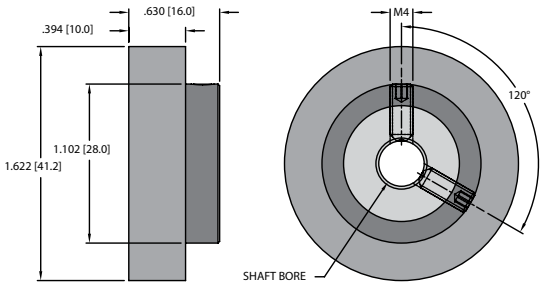

Magnetic Ring for pulse rate: 360 or 3600

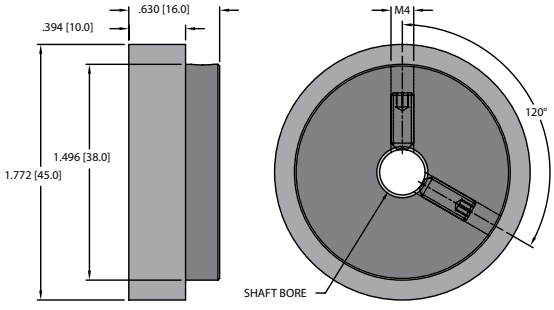

We reserve the right to make technical alterations without prior notice.

Magnetic Ring Assembly Type RMK-5



High rotational speed | High IP | Shock/vibration resistant | Reverse polarity protection

Robust
- **High shock and vibration resistance.**
- **Sturdy housing with IP67 protection. Option: special housing for maximum resistance against condensation (IP68 / IP69K, resistance to cyclic humidity acc. to EN 60068-3-38 as well as damp heat acc. to EN 60068-3-78).**
- **Non-contact measuring system, free from wear, ensures a long service life.**



RoHS compliant

Compact
- **Requires very little installation space Bore sizes available up to 30 mm.**

Simple Installation
- **Large mounting tolerance between magnetic band and sensor head.**
- **Slotted hole mounting ensures simple alignment.**
- **Function display via LED.**

Mechanical characteristics:

Max speed:		12000 rpm
Protection:		
	Q10	IP67 acc. to EN 60529
	P10	IP68 / IP69K acc. to EN 60529, DIN 40050-9 and humidity tested acc. to EN 60068-3-38, EN 60068-3-78
Working temperature:		-4 to +176 °F [-20 to +80 °C]
Shock resistance:		500g (5000 m/s²), 1ms
Vibration resistance:		30g (300 m/s²), 10-2000 Hz
Pole gap:		5 mm from pole to pole
Housing (sensor head):		aluminum
Cable:		2 m [6.56'] long, PUR 8 x 0.14 mm² [AWG 26], shielded, may be used in flexing cable installations
Status LED:		
	green	pulse index
	red	error; speed too high or magnetic fields too weak

RoHS compliant acc. to guideline EU 2011/65/EU

We reserve the right to make technical alterations without prior notice.

Turck Inc. | 3000 Campus Drive, Minneapolis, MN 55441 | T +1 800 544 7769 | F +1 763 553 0708 | www.turck.com

Magnetic Ring Assembly Type RMK-5

Electrical characteristics:

Output circuit [Key Code]:	Push-Pull [2R]		RS422 [4K]		
Power supply:	4.8-30 VDC		4.8 - 26 VDC		
Power consumption (no load):	typ. 25 mA max. 60 mA		typ. 25 mA max. 60 mA		
Permissible load/channel:	±20 mA		120 ohm		
Min. pulse edge interval:	1 µs		1 µs		
Signal level:					
High	min. +V - 2.0 V		min. 2.5 V		
Low	max. 0.5 V		max. 0.5 V		
Reference signal:	1 x per revolution				
System accuracy:	typ. 0.3 ° with shaft tolerance g6				
Pulse rate [ppr] [1]:	1000	1024	2000	2048	3600
max speed rpm w/o using zero pulse	9000	9000	4000	4000	2500
Pulse rate [ppr] [1]:					
max speed rpm using zero pulse	3000	2000	3000	2000	1700

[1] With an input frequency of the evaluation unit of 250kHz.

Standard Wiring:

Connection Type:	Common (0V)	+V	A	$\overline{A}$	B	$\overline{B}$	0	$\overline{0}$	⏚
Cable:	WH	BN	GN	YE	GY	PK	BU	RD	shield[3]

[3] Shield is attached to sensor housing.

Part Number Key: RMK-5

A		B		C		D	E		F
RMK-5	-	P10	-	6	-	2R	1000	-	C

A	Type
RMK-5	Rotary Magnetic, 5 mm Pole Gap

B	Housing
P10	10 mm, IP68/IP69K
Q10	10 mm, IP67

C	Bore
6	6 mm
8	8 mm
10	10 mm
12	12 mm
15	15 mm
20	20 mm
25	25 mm [1]
30	30 mm [1]
35	35 mm [2]
A4	5/8"
A6	1" [1]

[1] Only available with Pulse Rate '1024', '2048' and '3600'
[2] Only available with Pulse Rate '3600'

D	Voltage Supply and Output Type
2R	4.8-30 VDC, Push-Pull
4K	4.8-26 VDC, RS422

E	Pulse Rate
	1000, 1024, 2000, 2048, 3600

F	Type of Connection
C	Cable (2 m PUR)

Accessories:

- See page H1, Connectivity, for cables and connectors
- See page G1, Accessories, for mounting attachments and couplings

We reserve the right to make technical alterations without prior notice.

Magnetic Ring Assembly Type RMK-5

Mounting orientation and permissible mounting tolerances

Dimensions: RMK-5

Distances

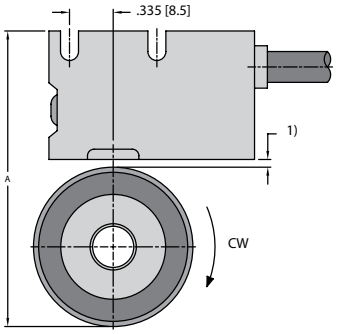

1) Distance sensor head / magnetic ring:
0.004 - 0.06 [0.1 - 1.5] (0.04 [1] recommended)

Pulse rate	A for distance sensor head / magnetic ring = 0.04 [1]
1000, 2000	2.24 [57.0]
1024, 2048	2.93 [74.3]
3600	3.18 [80.7]

Torsion

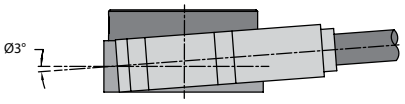

Offset

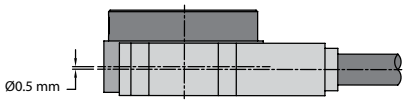

Tilting

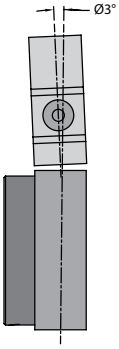

Dimensions: RMK-5

Sensor head

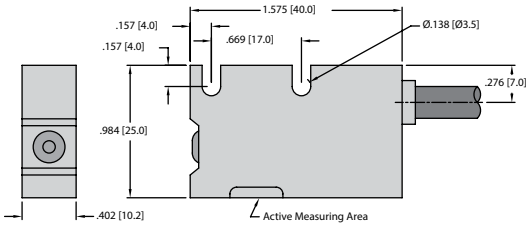

Magnetic ring for pulse rate: 1000 or 2000

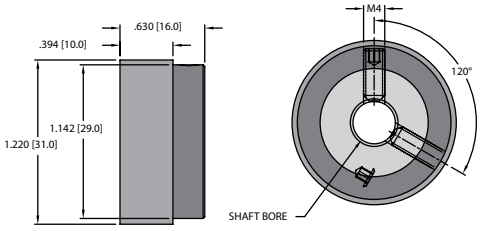

Magnetic ring for pulse rate: 1024 or 2048

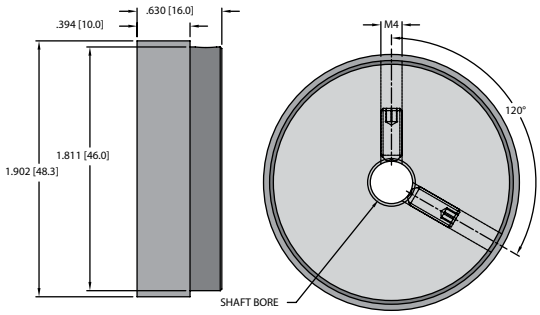

Magnetic ring for pulse rate: 3600

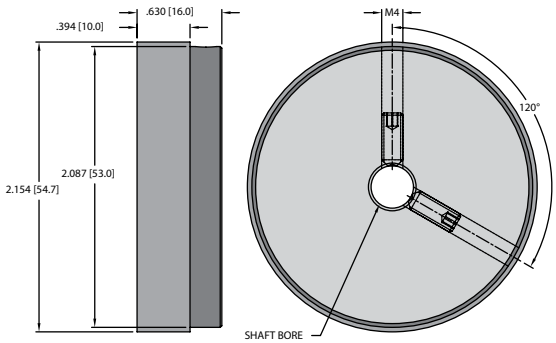

We reserve the right to make technical alterations without prior notice.

Turck Inc. | 3000 Campus Drive, Minneapolis, MN 55441 | T +1 800 544 7769 | F +1 763 553 0708 | www.turck.com

Large Bore Magnetic Ring Assembly Type RMKL-2


High rotational speed



High IP


Shock/vibration resistant


Reverse polarity protection

Robust
- **High shock and vibration resistance.**
- **Sturdy housing with IP67 protection. Option: special housing for maximum resistance against condensation (IP68 / IP69K, resistance to cyclic humidity acc. to EN 60068-3-38 as well as damp heat acc. to EN 60068-3-78).**
- **Non-contact measuring system, free from wear, ensures a long service life.**



RoHS compliant

Compact
- **Requires very little installation space.**

Simple Installation
- **Large mounting tolerance between magnetic band and sensor head.**
- **Slotted hole mounting ensures simple alignment.**
- **Function display via LED.**

Mechanical characteristics:

Max speed:		12000 rpm
Protection:		
	Q10	IP67 acc. to EN 60529
	P10	IP68 / IP69K acc. to EN 60529, DIN 40050-9 and humidity tested acc. to EN 60068-3-38, EN 60068-3-78
Working temperature:		-4 to +176 °F [-20 to +80 °C]
Shock resistance:		500 g (5000 m/s²), 1 ms
Vibration resistance:		30 g (300 m/s²), 10-2000 Hz
Pole gap:		2 mm from pole to pole
Housing (sensor head):		aluminum
Cable:		2 m [6.56'] long, PUR 8 x 0.14 mm² [AWG 26], shielded, may be used in flexing cable installations
Status LED:		
	green	pulse index
	red	error; speed too high or magnetic fields too weak

RoHS compliant acc. to guideline EU 2011/65/EU

We reserve the right to make technical alterations without prior notice.

Large Bore Magnetic Ring Assembly Type RMKL-2

Electrical characteristics:

Output circuit [Key Code]:		Push-Pull [2R]		RS422 [4K]	
Power supply:		4.8 - 30 VDC		4.8 - 26 VDC	
Power consumption (no load):		typ. 25 mA max. 60 mA		typ. 25 mA max. 60 mA	
Permissible load/channel:		±20 mA		120 ohm	
Min. pulse edge interval:				1 µs	
Signal level:					
	High	min. +V - 2.0 V		min. 2.5 V	
	Low	max. 0.5 V		max. 0.5 V	
Reference signal:		index periodical [1]			
System accuracy:		typ. 0.3° with shaft tolerance g6			
Pulse rate [ppr] [2]:		700	2240	2800	7000
	max. speed rpm	12000	6600	5300	2100
Pulse rate [ppr] [2]:		1600	5120	6400	16000
	max. speed rpm	9300	2900	2300	900

[1] At every pole change. The signal is generated by the sensor.
[2] With an input frequency of the evaluation unit of 250kHz.

Signal Figures:

With rotation of the magnetic ring in the CW-direction (see draft "Permissible Mounting tolerances").

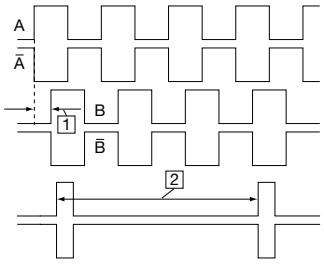

1 Min. pulse interval: pay attention to the instructions in the technical data

2 Periodic index signal (every 2 mm); the logical assignment A, B and 0-signal can change

Standard Wiring:

Connection Type:	Common (0V)	+V	A	Ā	B	B̄	0	0̄	⏚
Cable:	WH	BN	GN	YE	GY	PK	BU	RD	shield[3]

[3] Shield is attached to sensor housing.

Part Number Key: RMKL-2

A		B		C		D	E		F
RMKL-2	-	P10	-	76	-	2R	700	-	C

A	Type
RMKL-2	Rotary Magnetic, 2 mm Pole Gap

B	Housing
P10	10 mm, IP68/IP69K
Q10	10 mm, IP67

C	Bore
76	76 mm
180	180 mm

D	Voltage Supply and Output Type
2R	4.8-30 VDC, Push-Pull
4K	4.8-26 VDC, RS422

E	Pulse Rate
700, 2240, 2800, 7000 (for Bore size '76') 1600, 5120, 6400, 16000 (for Bore size '180')	

F	Type of Connection
C	Cable (2 m PUR)

Accessories:

- See page H1, Connectivity, for cables and connectors
- See page G1, Accessories, for mounting attachments and couplings

We reserve the right to make technical alterations without prior notice.

Turck Inc. | 3000 Campus Drive, Minneapolis, MN 55441 | T +1 800 544 7769 | F +1 763 553 0708 | www.turck.com

Large Bore Magnetic Ring Assembly Type RMKL-2

Mounting orientation and permissible mounting tolerances

Dimensions: RMKL-2

Distances

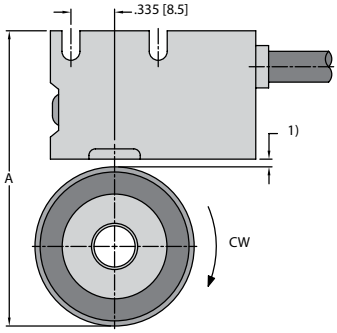

1) Distance sensor head / magnetic ring:
0.004-0.04 [0.1-1.0] (0.02 [0.4] recommended)

Pulse rate	A for distance sensor head / magnetic ring = 0.02 [0.4]
700, 2240, 2800, 7000	4.43 [112.5]
1600, 5120, 6400, 16000	8.96 [227.7]

Torsion

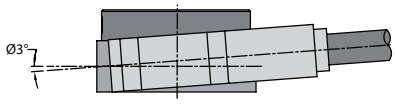

Offset

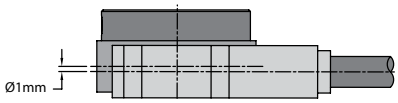

Tilting

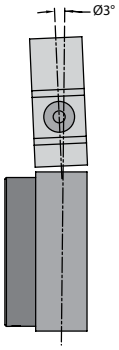

Dimensions: RMKL-2

Sensor head

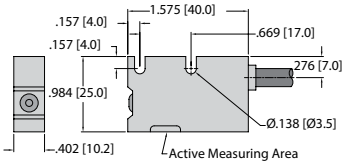

Magnetic Ring (press fit) for pulse rate: 700, 2240, 2800, 7000

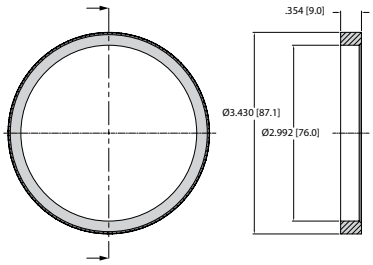

Magnetic Ring (press fit) for pulse rate: 1600, 5120, 6400, 16000

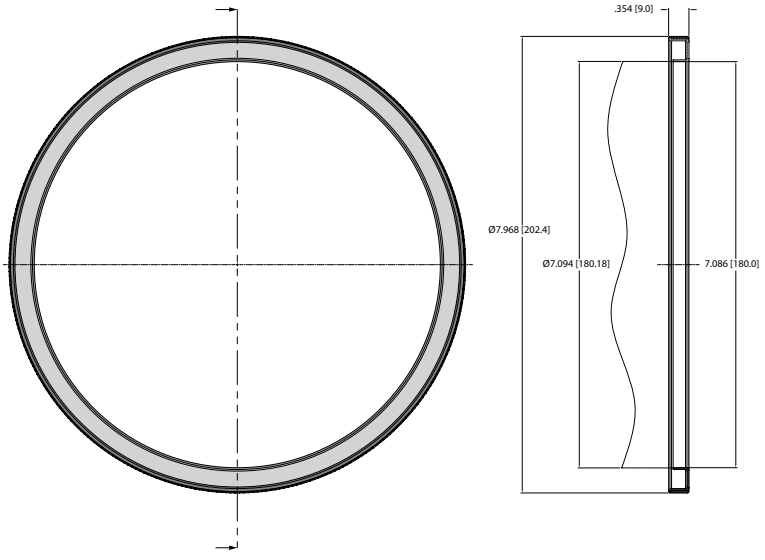

We reserve the right to make technical alterations without prior notice.

Large Bore Magnetic Ring Assembly Type RMKL-5



High rotational speed | High IP | Shock/vibration resistant | Reverse polarity protection

Robust
- **High shock and vibration resistance.**
- **Sturdy housing with IP67 protection. Option: special housing for maximum resistance against condensation (IP68 / IP69K, resistance to cyclic humidity acc. to EN 60068-3-38 as well as damp heat acc. to EN 60068-3-78).**
- **Non-contact measuring system, free from wear, ensures a long service life.**



RoHS compliant

Compact
- **Requires very little installation space.**

Simple Installation
- **Large mounting tolerance between magnetic band and sensor head.**
- **Slotted hole mounting ensures simple alignment.**
- **Function display via LED.**

Mechanical characteristics:

Max speed:		12000 rpm
Protection:		
	Q10	IP67 acc. to EN 60529
	P10	IP68 / IP69k acc. to EN 60529, DIN 40050-9 and humidity tested acc. to EN 60068-3-38, EN 60068-3-78
Working temperature:		-4 to +176 °F [-20 to +80 °C]
Shock resistance:		500 g (5000 m/s²), 1ms
Vibration resistance:		30 g (300 m/s²), 10-2000 Hz
Pole gap:		5 mm from pole to pole
Housing (sensor head):		aluminum
Cable:		2 m [6.56'] long, PUR 8 x 0.14 mm² [AWG 26], shielded, may be used in flexing cable installations
Status LED:		
	green	pulse index
	red	error; speed too high or magnetic fields too weak

RoHS compliant acc. to guideline EU 2011/65/EU

We reserve the right to make technical alterations without prior notice.

Turck Inc. | 3000 Campus Drive, Minneapolis, MN 55441 | T +1 800 544 7769 | F +1 763 553 0708 | www.turck.com

Large Bore Magnetic Ring Assembly Type RMKL-5

Electrical characteristics:

Output circuit [Key Code]:		Push-Pull [2R]		RS422 [4K]	
Power supply:		4.8 - 30 VDC		4.8 - 26 VDC	
Power consumption (no load):		typ. 25 mA max. 60 mA		typ. 25 mA max. 60 mA	
Permissible load/channel:		± 20 mA		120 ohm	
Min. pulse edge interval:		1 x per revolution		1 µs	
Signal level:					
	High	min. +V - 2.0 V		min. 2.5 V	
	Low	max. 0.5 V		max. 0.5 V	
Reference signal:		1 x per revolution			
System accuracy:		typ. 0.3° with shaft tolerance g6			
Pulse rate [ppr] [1]:		2048	3200	4096	6400
	max. speed rpm	7300	4600	3600	2300

[1] With an input frequency of the evaluation unit of 250kHz.

Standard Wiring:

Connection Type:	Common (0V)	+V	A	$\overline{A}$	B	$\overline{B}$	0	$\overline{0}$	⏚
Cable:	WH	BN	GN	YE	GY	PK	BU	RD	shield[2]

[2] Shield is attached to sensor housing.

Part Number Key: RMKL-5

A		B		C		D		E	F		G
RMKL-5	-	P10	-	70	-	F	-	2R	2048	-	C

A	Type
RMKL-5	Rotary Magnetic, 5 mm Pole Gap

B	Housing
P10	10 mm, IP68/IP69K
Q10	10 mm, IP67

C	Bore
70	70 mm

D	Magnetic Ring Mounting Method
F	Screwed Flange
H	Hub Screw*
P	Press Fit

*Standard

E	Voltage Supply and Output Type
2R	4.8-30 VDC, Push-Pull
4K	4.8-26 VDC, RS422

F	Pulse Rate
	2048, 3200, 4096, 6400

G	Type of Connection
C	Cable (2 m PUR)

Accessories:

- See page H1, Connectivity, for cables and connectors
- See page G1, Accessories, for mounting attachments and couplings

We reserve the right to make technical alterations without prior notice.

Large Bore Magnetic Ring Assembly Type RMKL-5

Mounting orientation and permissible mounting tolerances

Dimensions: RMKL-5

Distances

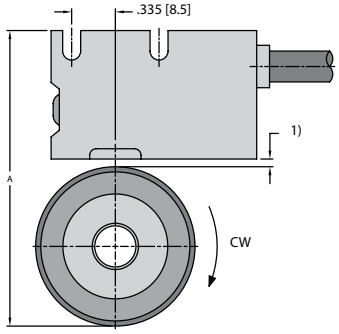

Torsion

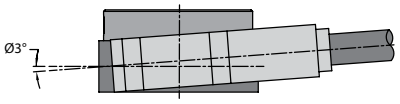

Offset

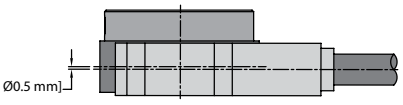

Tilting

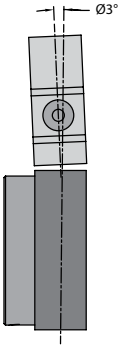

1) Distance sensor head / magnetic ring:
0.004-0.06 [0.1-1.5] (0.002 [0.04] recommended)

Pulse rate	A for distance sensor head / magnetic ring = 0.04 [1]
2048, 3200, 4096, 6400	5.04 [128.0]

Dimensions: RMKL-5

Sensor head

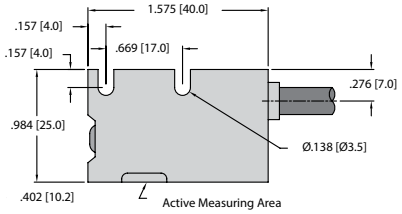

Magnetic ring (hub screw) for pulse rate: 2048, 3200, 4096, 6400

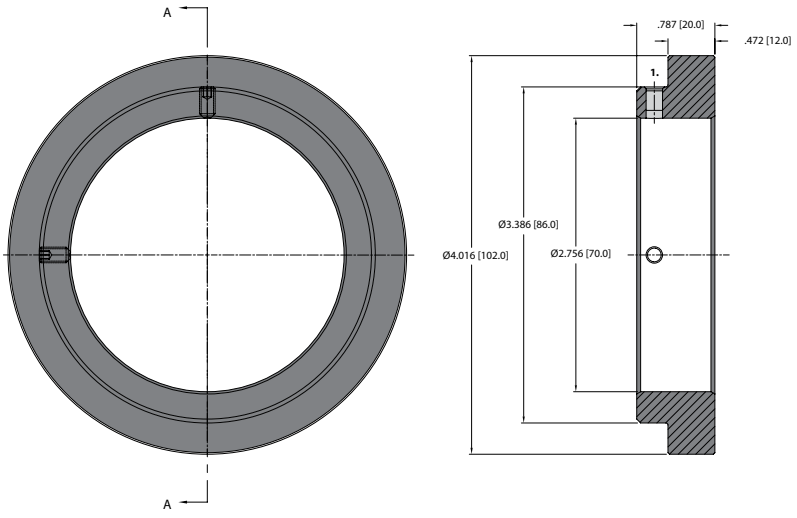

1. M5 set screw M4

We reserve the right to make technical alterations without prior notice.

Notes:

We reserve the right to make technical alterations without prior notice.

Notes:

We reserve the right to make technical alterations without prior notice.

Turck Inc. | 3000 Campus Drive, Minneapolis, MN 55441 | T +1 800 544 7769 | F +1 763 553 0708 | www.turck.com

ROTARY MEASUREMENT TECHNOLOGY
ABSOLUTE ENCODERS

SERIES		TYPE	INTERFACE	PAGE
Singleturn				
	Compact, Magnetic	Type RS-06/RS-07	Analog	**F6**
		Type RS-52/RS-53	CANopen	**F11**
		Type RS-52/RS-53	SAE J1939	**F15**
	Compact, Magnetic, Non Contact	Type RMA-5	SSI	**F19**
	Compact, Optical	Type RS-44/RS-48	SSI/BiSS-C	**F22**
		Type RS-45/RS-49	CANopen	**F28**
	Standard, Optical	Type RS-24/RS-31	SSI/BiSS-C	**F32**
		Type RS-25/RS-33	CANopen	**F40**
		Type RS-25/RS-33	EtherCAT	**F50**
		Type RS-25/RS-33	PROFIBUS®-DP	**F55**
		Type RS-25/RS-33	PROFINET IO	**F60**
		Type RS-107/RS-108	EtherNet/IP	**F65**
Multiturn				
	Compact, Magnetic	Type RM-97/RM-98	Analog	**F70**
		Type RM-99/RM-100	SSI	**F75**
		Type RM-101/RM-102	CANopen	**F79**
		Type RM-101/RM-102	SAE J1939	**F83**
	Compact, Magnetic, Robust	Type RM-115	Analog	**F87**
		Type RM-117	SSI	**F92**
		Type RM-109	CANopen	**F96**
		Type RM-109	SAE J1939	**F100**
	Standard, Magnetic	Type RM-116	Analog	**F104**
		Type RM-118	SSI	**F109**
		Type RM-121	CANopen	**F113**
		Type RM-121	SAE J1939	**F117**
	Compact, Optical/Battery	Type RM-46/RM-50	SSI/BiSS-C	**F121**
		Type RM-47/RM-51	CANopen	**F127**
	Standard, Optical/Geared	Type RM-28/RM-35	SSI/BiSS-C	**F131**
		Type RM-29/RM-36	CANopen/CANlift	**F139**
		Type RM-29/RM-36	EtherCAT	**F149**
		Type RM-29/RM-36	PROFIBUS-DP	**F154**
		Type RM-29/RM-36	PROFINET IO	**F160**
	Standard, Optical/Battery	Type RM-103/RM-104	SSI/BiSS-C	**F165**
		Type RM-105/RM-106	CANopen	**F172**
		Type RM-105/RM-106	EtherNet/IP	**F177**
		Type RM-105/RM-106	Modbus	**F182**
	Standard, Resolver/Geared	Type RM-89/RM-90	DeviceNet	**F187**
	Large Bore	Type RA-174	SSI	**F192**

We reserve the right to make technical alterations without prior notice.

Absolute Singleturn Encoder Selection Guide

		Absolute													
		RS-06	RS-07	RS-52	RS-53	RMA-5	RS-44	RS-48	RS-45	RS-49	RS-24	RS-31	RS-25	RS-33	RS-107	RS-108
Interface	SSI					X	X				X					
	SSI and Incremental track						X				X					
	SSI and SIN/COS track						X				X					
	BiSS-C						X				X					
	BiSS-C and Incremental track						X				X					
	BiSS-C and SIN/COS track						X				X					
	Analog output	X														
	PROFIBUS-DP												X			
	PROFINET												X			
	CANopen			X					X				X			
	CANlift															
	EtherCAT												X			
	J1939			X												
	EtherNet/IP														X	
	Modbus															
	Devicenet															
Mechanical Characteristics	Shaft max. (mm)	8	-	8	-	-	10	-	10	-	10	-	10	-	10	-
	Blind hollow shaft max. (mm)	-	10	-	10	-	-	10	-	10	-		-	15	-	15
	Through hollow shaft max. (mm)	-		-		30	-	8	-	8	-	15	-		-	
Performance Characteristics	Max. speed RPM (thousands)	6		6		1	12		12		12	9	9		8	6
	Mechanical gears															
	Non-contact gears															
	Resolution max. (Bit)	12		14		16	17		17		21		16		16	
	Programmable			X					X				X		X	
	Control outputs															
	Set key (optional)										X		X			
	Status LED (optional)	X		X		X			X		X		X		X	
	Bearing-lock	X		X			X		X		X		X		X	
	Temperature min.	-40 °F (-40 °C)		-40 °F (-40 °C)		-14 °F (-10 °C)	-40 °F (-40 °C)		-22 °F (-30 °C)		-40 °F (-40 °C)		-40 °F (-40 °C)		-40 °F (-40 °C)	
	Temperature max.	185 °F (85 °C)		185 °F (85 °C)		158 °F (70 °C)	194 °F (90 °C)		185 °F (85 °C)		194 °F (90 °C)		176 °F (80 °C)		176 °F (80 °C)	
	IP max.	IP69K		IP69K		IP40	IP67		IP67		IP67		IP67		IP65	

Catalog Page	F6	F11	F19	F22	F28	F32	F40	F65

We reserve the right to make technical alterations without prior notice.

Turck Inc. | 3000 Campus Drive, Minneapolis, MN 55441 | T +1 800 544 7769 | F +1 763 553 0708 | www.turck.com

Absolute Multiturn Encoder Selection Guide

		Absolute											
		RM-97	RM-98	RM-99	RM-100	RM-101	RM-102	RM-115	RM-117	RM-109	RM-116	RM-118	RM-121
Interface	SSI			X					X			X	
	SSI and Incremental track												
	SSI and SIN/COS track												
	BiSS-C												
	BiSS-C and Incremental track												
	BiSS-C and SIN/COS track												
	Analog output	X						X			X		
	PROFIBUS-DP												
	PROFINET												
	CANopen					X				X			X
	CANlift												
	EtherCAT												
	J1939					X				X			X
	EtherNet/IP												
	Modbus												
	Devicenet												
Mechanical Characteristics	Shaft max. (mm)	10	-	10	-	10	-	10	10	10	10	10	10
	Blind hollow shaft max. (mm)	-	10	-	10	-	10	-	-	-	-	-	-
	Through hollow shaft max. (mm)	-		-		-		-	-	-	-	-	-
Performance Characteristics	Max. speed RPM (thousands)	6	4	6	4	6	4	4	4	4	4	4	4
	Mechanical gears												
	Non-contact gears												
	Resolution max. (Bit)	12		38		38		12	38	38	12	38	38
	Programmable	X				X		X		X	X		X
	Control output												
	Set key (optional)												
	Status LED (optional)												
	Bearing-Lock	X		X		X		X	X	X	X	X	X
	Temperature min.	-40 °F (-40 °C)		-40 °F (-40 °C)		-40 °F (-40 °C)		-40 °F (-40 °C)	-40 °F (-40 °C)	-40 °F (-40 °C)	-40 °F (-40 °C)	-40 °F (-40 °C)	-40 °F (-40 °C)
	Temperature max.	185 °F (85 °C)		185 °F (85 °C)		185 °F (85 °C)		185 °F (85 °C)	185 °F (85 °C)	185 °F (85 °C)	185 °F (85 °C)	185 °F (85 °C)	185 °F (85 °C)
	IP max.	IP67		IP67		IP67		IP69K	IP69K	IP69K	IP65	IP65	IP65
Catalog Page		**F70**		**F75**		**F79**		**F87**	**F92**	**F96**	**F104**	**F109**	**F113**

We reserve the right to make technical alterations without prior notice.

Absolute Multiturn Encoder Selection Guide

		Absolute														
		RM-46	RM-50	RM-47	RM-51	RM-28	RM-35	RM-29	RM-36	RM-103	RM-104	RM-105	RM-106	RM-89	RM-90	RM-174
Interface	SSI	X				X				X						X
	SSI and Incremental track	X				X				X						X
	SSI and SIN/COS track	X				X				X						X
	BiSS-C	X				X				X						X
	BiSS-C and Incremental track	X				X				X						X
	BiSS-C and SIN/COS track	X				X				X						X
	Analog output															X
	PROFIBUS-DP							X								X
	PROFINET							X								X
	CANopen			X				X				X				X
	CANlift							X								X
	EtherCAT							X								X
	J1939															
	EtherNet/IP											X				X
	Modbus											X				X
	Devicenet													X		X
Mechanical Characteristics	Shaft max. (mm)	10	-	10	-	10	-	10	-	10	-	10	-	10	-	-
	Blind hollow shaft max. (mm)	-	10	-	10	-	15	-	15	-		-	15	-	15	-
	Through hollow shaft max. (mm)	-	8	-	8	-	14	-		-	15	-		-		45
Performance Characteristics	Max. speed RPM (thousands)	12		12		12	9	9		10	6	12	9	6		4.5
	Mechanical gears					X		X						X		X
	Non-contact gears	X		X												
	Resolution max. (Bit)	41		32		29		28		41		32		28		41
	Programmable							X				X		X		X
	Control output															
	Set key (optional)					X		X		X						X
	Status LED (optional)			X		X		X		X		X		X		X
	Bearing-Lock	X		X		X		X		X		X				X
	Temperature min.	-22 °F (-30 °C)		-22 °F (-30 °C)		-40 °F (-40 °C)		-40 °F (-40 °C)		-40 °F (-40 °C)		-40 °F (-40 °C)		-40 °F (-40 °C)		32 °F (0 °C)
	Temperature max.	194 °F (90 °C)		185 °F (85 °C)		194 °F (90 °C)		176 °F (80 °C)		185 °F (85 °C)		176 °F (80 °C)		185 °F (85 °C)		158 °F (70 °C)
	IP max.	IP67		IP67		IP67		IP67		IP67		IP67		IP67		IP64
Catalog Page		**F121**		**F127**		**F131**		**F139**		**F165**		**F172**		**F187**		**F192**

We reserve the right to make technical alterations without prior notice.

Notes:

We reserve the right to make technical alterations without prior notice.

Absolute, Singleturn Encoder Type RS-06 (Shaft) / RS-07 (Blind Hollow Shaft) Analog



Bearing Lock | High rotational speed | Temperature | High IP | High shaft load capacity | Shock/vibration resistant | Short-circuit protected | Reverse polarity protection | Output | Magnetic sensor | Seawater-resistant version on request

Rugged

- Non-contact measuring system: **Ensures long service life and the reliability of the application.**
- **Stays sealed even when subjected to harsh everyday use.** Solid die-cast housing with up to IP69K protection **offers security against failures in the field.**
- Wide temperature range of -40 to +185 °F (-40 to +85 °C).
- **Increased ability to withstand vibration and installation errors.** High shock (> 500 g) and vibration resistance (> 30 g) **eliminates machine downtime and repairs.**



Absolute

Compact

- **Can be used where space is tight:** Overall diameter of only 36 mm.
- **Shaft version can be mounted on a tight radius:** fixing holes on Ø 26 mm.
- **Hollow shaft version is ideal for large shafts:** blind hollow shaft up to 10 mm.

Versatile

- **Interface of 4-20 mA, 0-10 V:** One size available for different applications.
- **Measuring range of 45°, 90°, 180° and 360°.**
- **Easy diagnosis in case of fault condition:** Error indication via red LED (only current output).
- **Hollow shaft version may be fixed individually:** Torque stop and flex coupling available.
- **May be used in outdoor applications with large fluctuations in temperature:** Resistant against humidity and condensation.

Mechanical Characteristics:

Max. speed:	6,000 RPM
Starting torque:	< 8.5 oz-in (< 0.06 Nm)
Radial load capacity of shaft:	9.0 lbs (40 N)
Axial load capacity of shaft:	4.5 lbs (20 N)
Weight:	approx. 0.44 lbs (0.2 kg)
Protection acc. to EN 60 529 / DIN 40050-9:	IP67 / IP69K
Working temperature range:	-40 to +185 °F (-40 to +85 °C)
Materials:	Shaft: stainless steel, Flange: aluminium, Housing: die cast zinc, Cable: PUR
Shock resistance acc. to EN 60068-2-27:	500 g (5,000 m/s²), 6 ms
Vibration resistance acc. to EN 600688-2-6:	30 g (300 m/s²), 10-2,000 Hz
Permanent shock resistance acc. to EN 60068-2-29:	100 g (1,000 m/s²), 2 ms
Vibration (broad-band random) to EN 60068-2-64:	5-2500 Hz, 10 g (100 m/s²) - rms

All-round protection:

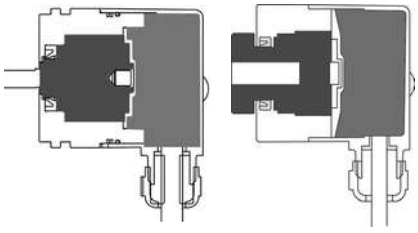

Bearing-Lock:
IP69K protection on the flange side, robust bearing assemblies with interlocking bearings, mechanically protected shaft seal.

Protected Sensor:
Fully encapsulated electronics, separate mechanical bearing assembly.

We reserve the right to make technical alterations without prior notice.

Turck Inc. | 3000 Campus Drive, Minneapolis, MN 55441 | T +1 800 544 7769 | F +1 763 553 0708 | www.turck.com

Absolute, Singleturn Encoder Type RS-06 (Shaft) / RS-07 (Blind Hollow Shaft) — Analog

Electrical Characteristics Current Interface 4-20 mA:

Sensor:	
Supply voltage:	10-30 VDC
Current consumption (without output load):	max. 38 mA
Reverse polarity protection at power supply (+V):	Yes
Measuring range:	45°, 90°, 180° or 360°
Resolution/Code:	12 bit
Linearity 77 °F (25 °C):	< 1° (360° measurement range)
Repeat accuracy 77 °F (25 °C):	< 0.1° (360 ° measurement range)
Status LED:	Red: sensor break detection, input too hight Green: reference point (CW: 0° to 1°) (CCW: 0° to -1°)
4-20 mA Current Loop:	
Output load:	max. 200 ohms at 10 VDC max. 900 ohms at 24 VDC
Setting time:	1 ms (R_{load} = 400 Ohm, 77 °F (25 °C))

Short-circuit protected outputs: when the supply voltage is correctly applied, then output to output is short-circuit protected, but not output to 0 V or to +V.

Supply voltage and sensor output signal are not galvanically isolated.

Electrical Characteristics Voltage Interface

Sensor:	
Supply voltage:	0-5 V, 10-30 VDC 0-10 V, 15-30 VDC
Current consumption (without output load):	max. 35 mA
Reverse polarity protection at power supply (+V):	Yes
Measuring range:	45°, 90°, 180° or 360°
Resolution/Code:	12 bit
Linearity 77 °F (25 °C):	< 1° (360° measurement range)
Repeat accuracy:	< 0.1° (360 ° measurement range)
Voltage Output:	
Current output:	max. 10 mA
Setting time:	< 1 ms (R_{load} ≥1 KOhm, 77 °F (25 °C))

Supply voltage and sensor output signal are not galvanically isolated.

Short-circuit protected outputs: when the supply voltage is correctly applied, then output to output is short-circuit protected, but not output to 0 V or to +V.

Status LED	Green: reference point display turns on at cw: between 0° and 1° at ccw: between 0° and -1°

General Electrical Characteristics:

RoHS compliant:	acc. to EU guideline 2011/65/EU

Standard Wiring:

Connection Type:	Common (0 V)	+V	+I	-I
Cable:	WH	BN	GN	YE
M12 Eurofast:	3	2	4	5

Wiring Diagram:

Male Encoder View

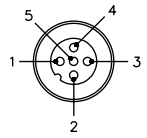

M12 Eurofast Pinout

Mating Cordset:
E-RKC 4.5T-1695-*/A

* Length in meters.

We reserve the right to make technical alterations without prior notice.

Absolute, Singleturn Encoder Type RS-06 (Shaft) / RS-07 (Blind Hollow Shaft) Analog

Note: Encoders must be ordered with a clockwise or counterclockwise profile. This determines whether the analog output increases or decreases in the given direction.

Example (Output Signal Profile):
Measuring range 45° / 90° / 180° / 360°

Clockwise (CW) Version

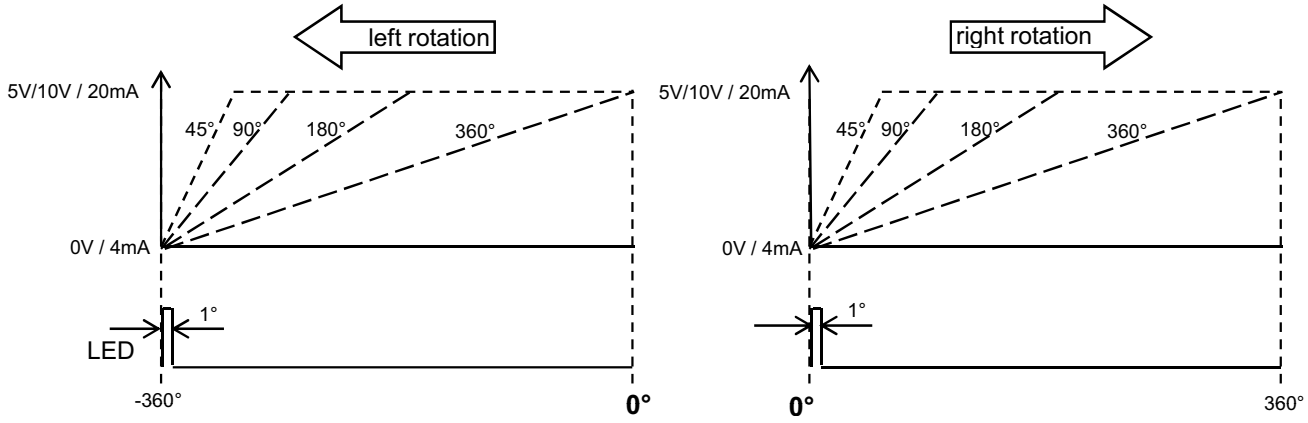

Example (Output Signal Profile):
Measuring range 45° / 90° / 180° / 360°

Counterclockwise (CCW) Version

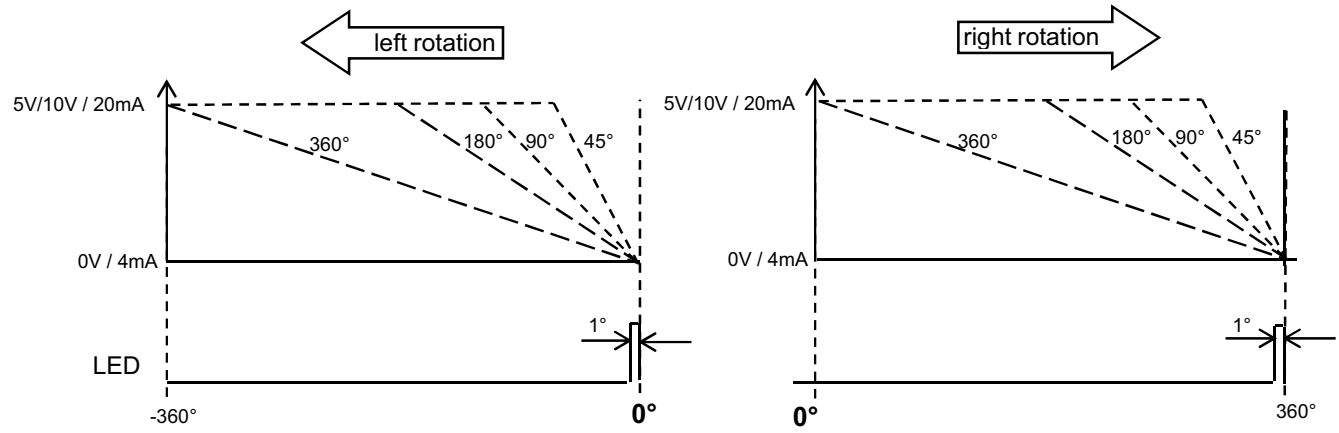

We reserve the right to make technical alterations without prior notice.

Turck Inc. | 3000 Campus Drive, Minneapolis, MN 55441 | T +1 800 544 7769 | F +1 763 553 0708 | www.turck.com

Absolute, Singleturn Encoder Type RS-06 (Shaft) / RS-07 (Blind Hollow Shaft) — Analog

Part Number Key: RS-06 Shaft Version

A	B	C		D	E		F		G
RS-06P	6	S	-	7A	AL	-	H1151	/	N0

A	Type
RS-06P	Ø 36 mm, Shaft, IP69K Shaft Seal
RS-06S	Ø 36 mm, Shaft, IP67 Shaft Seal

B	Shaft (Ø x L)
6	Ø 6 mm x 12.5 mm
8	Ø 8 mm x 12.5 mm
A0	Ø 1/4" x 12.5 mm

C	Flange
S	Servo Flange

D	Voltage Supply and Output Type
7A	10-30 VDC, 4-20 mA
8B	15-30 VDC, 0-10 V
BA	10-30 VDC, 0-5 V

E	Direction
AL	Count Direction CCW*
AR	Count Direction CW*

F	Type of Connection
H1151	Radial 5-pin M12 Eurofast® Connector
H1451	Axial 5-pin M12 Eurofast Connector
C1M	Radial Cable (1 m PUR)
CA1M	Axial Cable (1 m PUR)

G	Measurement Range
N0	1 x 360°
N4	1 x 180°
N3	1 x 90°
N1	1 x 45°

*cw = increasing code values when shaft turning clockwise (cw). Top view on shaft.

Part Number Key: RS-07 Blind Hollow Shaft Version

A	B	C		D	E		F		G
RS-07B	6	E	-	7A	AL	-	H1151	/	N0

A	Type
RS-07B	Ø 36 mm, Blind Hollow Shaft, IP69K Shaft Seal
RS-07C	Ø 36 mm, Blind Hollow Shaft, IP67 Shaft Seal

B	Bore (18 mm Insertion Depth)
6	Ø 6 mm
8	Ø 8 mm
10	Ø 10 mm
A0	Ø 1/4"

C	Flange
E	Ø 46 mm Flange w/ Slotted Flex Mount
T	Flange w/ Long Torque Stop

D	Voltage Supply and Output Type
7A	10-30 VDC, 4-20 mA
8B	15-30 VDC, 0-10 V
BA	10-30 VDC, 0-5 V

E	Direction
AL	Count Direction CCW*
AR	Count Direction CW*

F	Type of Connection
H1151	Radial 5-pin M12 Eurofast Connector
H1451	Axial 5-pin M12 Eurofast Connector
C1M	Radial Cable (1 m PUR)
CA1M	Axial Cable (1 m PUR)

G	Measurement Range
N0	1 x 360°
N4	1 x 180°
N3	1 x 90°
N1	1 x 45°

*cw = increasing code values when shaft turning clockwise (cw). Top view on shaft.

Accessories:

- See page H1, Connectivity, for cables and connectors
- See page G1, Accessories, for mounting attachments and couplings

We reserve the right to make technical alterations without prior notice.

Absolute, Singleturn Encoder Type RS-06 (Shaft) / RS-07 (Blind Hollow Shaft) — Analog

Dimensions: RS-06 Shaft Version

RS-06 Flange S
Connection C1M & CA1M

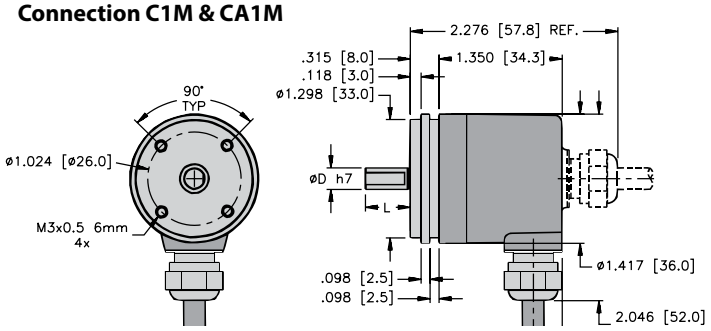

RS-06 Flange S
Connection H1151 & H1451

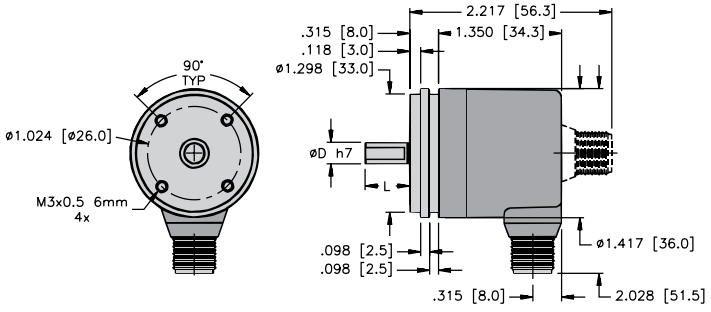

Mounting Advice:
The flanges and shafts of the encoder and drive should not be rigidly coupled together at the same time. We recommend the use of suitable couplings (see page G1, Accessories).

Dimensions: RS-07 Blind Hollow Shaft Version

RS-07 Flange T
Connection C1M & CA1M

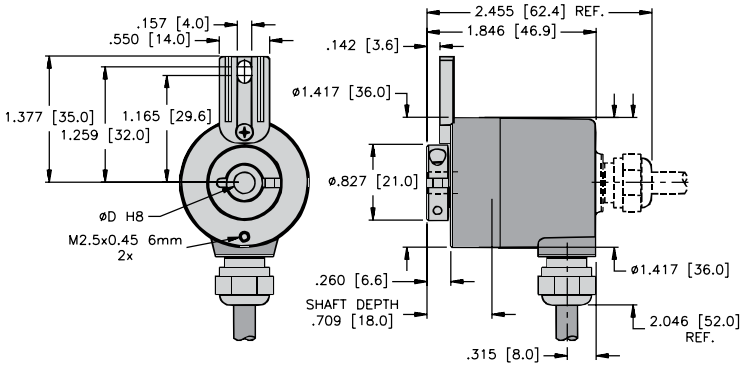

RS-07 Flange E
Connection H1151 & H1451

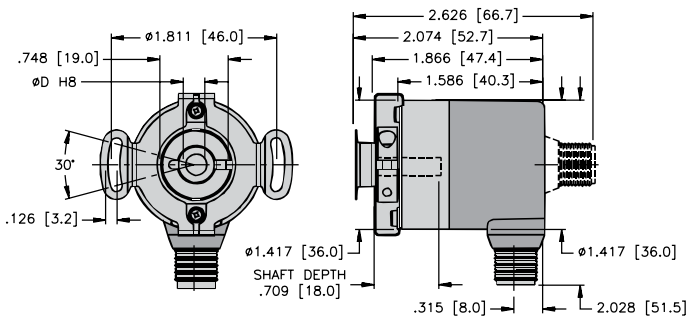

We reserve the right to make technical alterations without prior notice.

Turck Inc. | 3000 Campus Drive, Minneapolis, MN 55441 | T +1 800 544 7769 | F +1 763 553 0708 | www.turck.com

Absolute, Singleturn Encoder Type RS-52 (Shaft) / RS-53 (Blind Hollow Shaft) CANopen

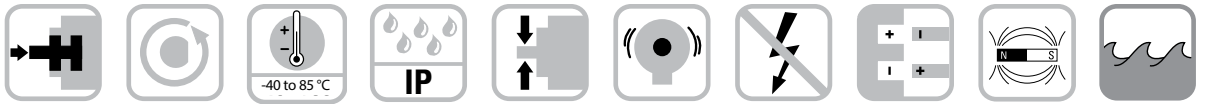

Bearing-Lock | High rotational speed | Temperature | High IP | High shaft load capacity | Shock/vibration resistant | Short-circuit protected | Reverse polarity protection | Magnetic sensor | Seawater-resistant version on request

Rugged

- Non-contact measuring system: **Ensures long service life and the reliability of the application.**
- **Stays sealed even when subjected to harsh everyday use:** Solid die-cast housing with up to IP69K protection **offers security against failures in the field.**
- Wide temperature range of -40 to +185 °F (-40 to +85 °C).
- **Increased ability to withstand vibration and installation errors:** High shock (> 500 g) and vibration resistance (> 30 g) **eliminates machine downtime and repairs.**



Absolute

CANopen

Compact

- **Can be used where space is tight:** Overall diameter of only 36 mm.
- **Shaft version can be mounted on a tight radius:** Fixing holes on Ø 26 mm.
- **Hollow shaft version is ideal for large shafts:** Blind hollow shaft up to 10 mm.

Versatile

- **CANopen fieldbus** with the latest profiles.
- **Connections for every application:** M12 connector or cable connection.
- **Real-time data: Position, speed or working area:** Variable PDO mapping in the memory.
- **Fast, error-free start-up, without setting any switches:** LSS services for configuration of the node address and baud rate via CIA DS 305 V2.0. Node address, baud rate and termination can be programmed via the bus.
- **Hollow shaft version may be fixed individually:** Torque stop and flex coupling available.
- **May be used in outdoor applications with large fluctuations in temperature:** Resistant against humidity and condensation.

Mechanical Characteristics:

Max. speed:	6,000 RPM
Starting torque:	< 8.5 oz-in (< 0.06 Nm)
Radial load capacity of shaft:	9.0 lbs (40 N)
Axial load capacity of shaft:	4.5 lbs (20 N)
Weight:	approx. 0.44 lbs (0.2 kg)
Protection acc. to EN 60 529 / DIN 40050-9:	IP67 / IP69K
Working temperature range:	-40 to +185 °F (-40 to +85 °C)
Materials:	Shaft: stainless steel, Flange: aluminium, Housing: die cast zinc, Cable: PUR
Shock resistance acc. to DIN-IEC 68-2-27:	500 g (5,000 m/s²), 6 ms
Vibration resistance acc. to DIN-IEC 68-2-6:	30 g (300 m/s²), 10-2,000 Hz
Permanent shock resistance acc. to DIN-IEC 68-2-29:	100 g (1,000 m/s²), 2 ms
Vibration (broad-band random) to DIN-IEC 68-2-64:	5-2500 Hz, 10 g (100 m/s²) - rms

All around protection:

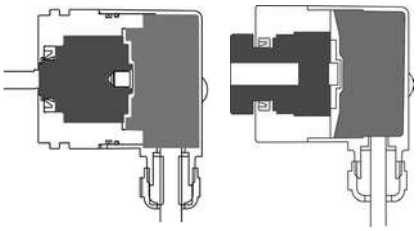

Bearing-Lock:
IP69K protection on the flange side, robust bearing assemblies with interlocking bearings, mechanically protected shaft seal.

Protected Sensor:
Fully encapsulated electronics, separate mechanical bearing assembly.

We reserve the right to make technical alterations without prior notice.

Absolute, Singleturn Encoder Type RS-52 (Shaft) / RS-53 (Blind Hollow Shaft) CANopen

General Electrical Characteristics:

Sensor:	
Supply voltage:	8-30 VDC
Current consumption (without output load):	Max. 25 mA
Reverse polarity protection at power supply (+V):	Yes
Measuring range:	360°
Linearity:	< 1
Repeat accuracy 77 °F (25 °C):	< 0.1
Data refresh rate:	400 µs
RoHS compliant acc. to EU guideline 2011/65/EU	
UL approval:	file E356899

Diagnostic LED (two-color, red/green):

LED ON or blinking red: Error display

LED ON or blinking green: Status display

Interface Characteristics CANopen:

Resolution:	1-16384 (14 bit), (scalable: 1-16384)
Default value:	16384 (14 bit)
Code:	Binary
Interface:	CAN High-Speed according to ISO 11898,
	Basic and Full CANCAN Specification 2.0 B
Protocol:	CANopen profile DS 406 V3.2 with manufacturer-specific add-ons LSS-Services DS305 V2.0
Baud rate:	10-1000 kbit/s (software configurable)
Node address:	1-127 (software configurable)
Termination switchable:	Software configurable
LSS Services:	CIA LSS protocol DS305 Global command support for node address and baud rate. Selective commands via attributes of the identity object

General Information about CANopen

The RS-52 and RS-53 series of encoders support the latest CANopen communication profile according to DS 301 V4.02 . In addition, device-specific profiles like the encoder profile DS406 V3.2 are available.

The following operating modes may be selected: Polled Mode, Cyclic Mode, Sync Mode. Moreover, scale factors, preset values, limit switch values and many other additional parameters can be programmed via the CANopen fieldbus. When switching the device on, all parameters, which have been saved on a flash memory to protect them against power failure, are loaded again.

Position and status output values may be combined in a freely variable way as mapping.

The encoders are available with a connector or a cable connection. The device address and baud rate can be set or modified by means of the software. The two-color LED indicates the operating or fault status of the CANopen fieldbus, as well as the status of the internal diagnostics.



CANopen Communication Profile DS301 V4.02

The following Class C2 functionality is integrated:

- NMT Slave
- Heartbeat Protocol
- Identity Object
- Error Behavior Object
- Variable PDO Mapping self-start programmable (power on to operational), 3 Sending PDO's
- Node address, baud rate and CANopen
- Programmable termination

CANopen Encoder Profile DS406 V3.2

The following parameters may be programmed:

- Event mode
- One work area with upper and lower limit and the corresponding output states
- Variable PDO mapping for position, speed and work area status
- Extended failure management for position sensing with integrated temperature control
- User interface with visual display of bus and failure status – one LED, two colors
- Customer-specific memory – 16 Bytes
- Watchdog controlled device

LSS Layer Setting Services DS305 V2.0

- Global support of Node-ID and baud rate
- Selective protocol via identity object (1018h)

Standard Wiring:

Connection Type:	+V	Common (0 V)	CAN GND	CAN High	CAN Low
Cable:	BN	WH	GY	GN	YE
M12 Eurofast:	2	3	1	4	5

Wiring Diagram:

Male Encoder View

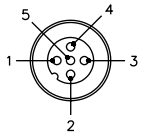

M12 Eurofast Pinout

Mating Cordset[1]:
RKC 572-*M/S3117

* Length in meters.
[1] See Connectivity section H for corresponding cable color code.

We reserve the right to make technical alterations without prior notice.

Turck Inc. | 3000 Campus Drive, Minneapolis, MN 55441 | T +1 800 544 7769 | F +1 763 553 0708 | www.turck.com

Absolute, Singleturn Encoder Type RS-52 (Shaft) / RS-53 (Blind Hollow Shaft) CANopen

Part Number Key: RS-52 Shaft Version

A	B	C		D		E
RS-52S	6	S	-	9D14B	-	H1151

A	Type
RS-52S	Ø 36 mm, Shaft, IP69K Shaft Seal
RS-52T	Ø 36 mm, Shaft, IP67 Shaft Seal

B	Shaft (Ø x L)
6	Ø 6 mm x 12.5 mm
8	Ø 8 mm x 12.5 mm
A0	Ø 1/4" x 12.5 mm

C	Flange
S	Servo Flange

D	Voltage Supply and Output Type
9D14B	8-30 VDC, CANopen DS301 V4.02

E	Type of Connection
H1151	Radial 5-pin M12 Eurofast Connector
C1M	Radial Cable (1 m PUR)

Part Number Key: RS-53 Blind Hollow Shaft Version

A	B	C		D		E
RS-53B	6	E	-	9D14B	-	H1151

A	Type
RS-53B	Ø 36 mm, Blind Hollow Shaft, IP69K Shaft Seal
RS-53C	Ø 36 mm, Blind Hollow Shaft, IP67 Shaft Seal

B	Bore (18mm Insertion Depth)
6	Ø 6 mm
8	Ø 8 mm
10	Ø 10 mm
A0	Ø 1/4"

C	Flange
E	Flange w/ Slotted Flex Mount
T	Flange w/ Long Torque Stop

D	Voltage Supply and Output Type
9D14B	8-30 VDC, CANopen DS301 V4.02

E	Type of Connection
H1151	Radial 5-pin M12 Eurofast Connector
C1M	Radial Cable (1 m PUR)

Accessories:

- See page H1, Connectivity, for cables and connectors
- See page G1, Accessories, for mounting attachments and couplings

We reserve the right to make technical alterations without prior notice.

Absolute, Singleturn Encoder Type RS-52 (Shaft) / RS-53 (Blind Hollow Shaft) CANopen

Dimensions: RS-52 Shaft Version

RS-52 Flange S
Connection C1M

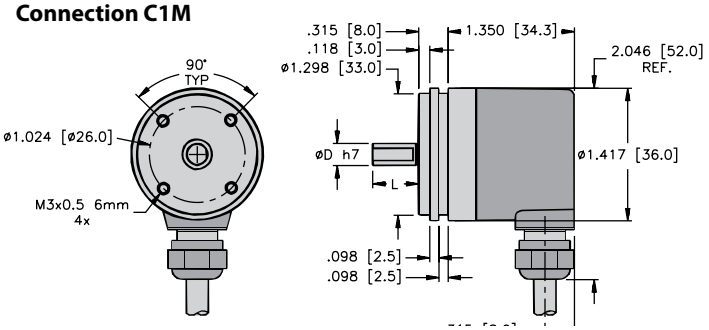

RS-52 Flange S
Connection H1151

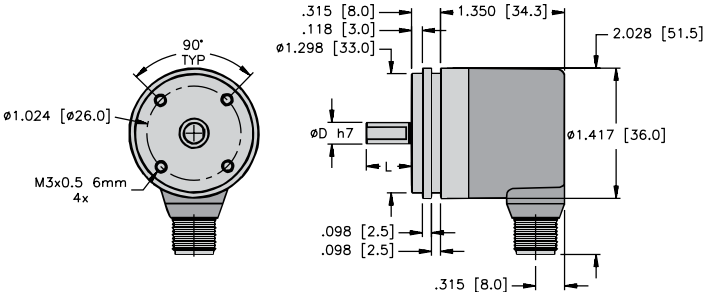

Mounting Advice:
The flanges and shafts of the encoder and drive should not be rigidly coupled together at the same time. We recommend the use of suitable couplings (see page G1, Accessories).

Dimensions: RS-53 Blind Hollow Shaft Version

RS-53 Flange T
Connection C1M

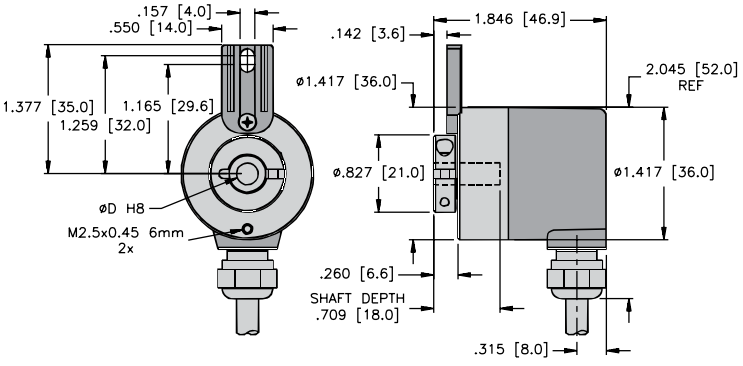

RS-53 Flange E
Connection H1151

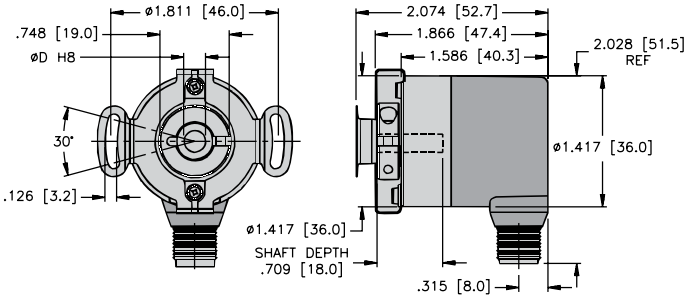

We reserve the right to make technical alterations without prior notice.

Absolute, Singleturn Encoder Type RS-52 (Shaft) / RS-53 (Blind Hollow Shaft) SAE J1939



Bearing-Lock | High rotational speed | Temperature | High IP | High shaft load capacity | Shock/vibration resistant | Short-circuit protected | Reverse polarity protection | Magnetic sensor | Seawater-resistant version on request

Rugged

- Non-contact measuring system: **Ensures long service life and the reliability of the application.**
- **Stays sealed even when subjected to harsh everyday use:** Solid die-cast housing with up to IP69K protection **offers security against failures in the field.**
- Wide temperature range of -40 to +185 °F (-40 to +85 °C).
- **Increased ability to withstand vibration and installation errors:** High shock (> 500 g) and vibration resistance (> 30 g) **eliminates machine downtime and repairs.**



Absolute

SAE J1939

Compact

- **Can be used where space is tight:** Overall diameter of only 36 mm.
- **Shaft version can be mounted on a tight radius:** Fixing holes on Ø 26 mm.
- **Hollow shaft version is ideal for large shafts:** Blind hollow shaft up to 10 mm.

Versatile

- **Latest fieldbus performance:** SAE J1939 with CAN Highspeed according to ISO 11898.
- **Connections for every application:** M12 connector or cable connection.
- **Simple, fast recognition of the operating status:** Bicolored LED signalizes Bus-Status or potential errors.
- **Fast, error-free start-up, no need to set switches:** Automatic address allocation via Address Claiming (ACL).
- **May be used in outdoor applications with large fluctuations in temperature:** Resistant against humidity and condensation.

Mechanical Characteristics:

Max. speed:	6,000 RPM
Starting torque:	< 8.5 oz-in (< 0.06 Nm)
Radial load capacity of shaft:	9.0 lbs (40 N)
Axial load capacity of shaft:	4.5 lbs (20 N)
Weight:	approx. 0.44 lbs (0.2 kg)
Protection acc. to EN 60 529 / DIN 40050-9:	IP67 / IP69K
Working temperature range:	-40 to +185 °F (-40 to +85 °C)
Materials:	Shaft: stainless steel, Flange: aluminium, Housing: die cast zinc, Cable: PUR
Shock resistance acc. to DIN-IEC 68-2-27:	500 g (5,000 m/s²), 6 ms
Vibration resistance acc. to DIN-IEC 68-2-6:	30 g (300 m/s²), 10-2,000 Hz
Permanent shock resistance acc. to DIN-IEC 68-2-29:	100 g (1,000 m/s²), 2 ms
Vibration (broad-band random) to DIN-IEC 68-2-64:	5-2500 Hz, 10 g (100 m/s²) - rms

All-round protection:

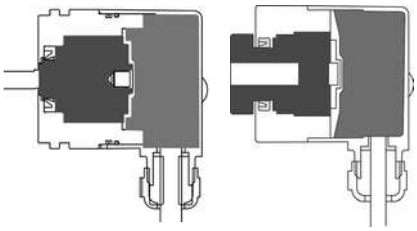

Bearing-Lock:
IP69K protection on the flange side, robust bearing assemblies with interlocking bearings, mechanically protected shaft seal.

Protected Sensor:
Fully encapsulated electronics, separate mechanical bearing assembly.

We reserve the right to make technical alterations without prior notice.

Absolute, Singleturn Encoder Type RS-52 (Shaft) / RS-53 (Blind Hollow Shaft) SAE J1939

General Electrical Characteristics:

Supply voltage:	8-30 VDC
Current consumption (without output load):	Max. 25 mA
Reverse polarity protection at power supply (+V):	Yes
Measuring range:	360°
Linearity:	< 1°
Repeat accuracy 77 °F (25 °C):	< 0.1°
Data refresh:	400 µs
RoHS compliant acc. to EU guideline 2002/95/EG	
UL approval:	file E356899

Interface Characteristics CANopen:

Resolution:	1-16384 (14 bit), (scalable: 1-16384)
Default value:	16384 (14 bit)
Code:	Binary
Interface:	CAN High-Speed according to ISO 11898, Basic and Full CANCAN Specification 2.0 B
Protocol:	J1939
Baud rate:	250 kbit/s (software configurable)
Node address:	1-255 (via address claiming)
Termination:	Software configurable

Diagnostic LED (two-color, red/green):

LED ON or blinking red: Error display
LED ON or blinking green: Status display

General Information Concerning SAE J1939

The protocol J1939 originates from the international Society of Automotive Engineers (SAE) and operates on the physical layer with high speed CAN as per ISO11898. The application emphasis lies in the area of the power train and chassis of commercial vehicles. It serves to transfer diagnostic data (for example, motor speed, position, temperature) and control information. Series RS-52 and RS-53 encoders support the total functionality of J1939.

This protocol is a multimaster system with decentralized network management that does not involve channel-based communication. It supports up to 254 logic nodes and 30 physical control devices per segment. The information is described as Parameters (signals) and combined on four memory pages (Data Pages) into Parameter Groups (PGs). Each Parameter Group can be identified via a unique number, the Parameter Group Number (PGN). Independently of this, each signal is assigned a unique SPN (Suspect Parameter Number).

The major part of the communication occurs cyclically and can be received by all control devices without the explicit request for data (Broadcast). Furthermore, the parameter groups are optimized to a length of eight data bytes. This enables very efficient utilization of the CAN protocol.

If greater amounts of data need to be transferred, then transport protocols (TP) can be used: BAM (Broadcast Announce Message) and CMDT (Connection Mode Data Transfer). With BAM TP the transfer of data occurs as a broadcast.



Encoder Implementation SAE J1939

- PGNs that are adaptable to the customer's application
- Resolution of address conflicts -> Address Claiming (ACL)
- Continuous checking whether control addresses have been assigned twice within a network
- Change of control device addresses during run-time
- Unique identification of a control device with the help of a name that is unique worldwide. This name serves to identify the functionality of a control device in the network
- Predefined PGs for Position, Speed and Alarm
- 250 kbit/s, 29-bit Identifier
- Watchdog controlled device

A two-color LED, located on the rear of the encoder, signals the operating and fault status of the J1939 protocol, as well as the status of the internal sensor diagnostics.

Standard Wiring:

Connection Type:	+V	0 V	CAN GND	CAN High	CAN Low
M12 Eurofast:	2	3	1	4	5
Cable:	BN	WH	GY	GN	YE

Wiring Diagram:

Male Encoder View

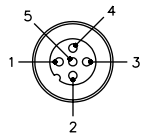

M12 Eurofast Pinout

Mating Cordset[1]:
RKC 572-*M/S3117

* Length in meters.
[1] See Connectivity section H for corresponding cable color code.

We reserve the right to make technical alterations without prior notice.

Turck Inc. | 3000 Campus Drive, Minneapolis, MN 55441 | T +1 800 544 7769 | F +1 763 553 0708 | www.turck.com

Absolute, Singleturn Encoder Type RS-52 (Shaft) / RS-53 (Blind Hollow Shaft) SAE J1939

Part Number Key: RS-52 Shaft Version

A	B	C		D		E
RS-52S	6	S	-	9F14B	-	H1151

A	Type
RS-52S	Ø 36 mm, Shaft, IP69K Shaft Seal
RS-52T	Ø 36 mm, Shaft, IP67 Shaft Seal

B	Shaft (Ø x L)
6	Ø 6 mm x 12.5 mm
8	Ø 8 mm x 12.5 mm
A0	Ø 1/4" x 12.5 mm

C	Flange
S	Servo Flange

D	Voltage Supply and Output Type
9F14B	8-30 VDC, CAN Highspeed

E	Type of Connection
H1151	Radial 5-pin M12 Eurofast Connector
C1M	Radial Cable (1 m PUR)

Part Number Key: RS-53 Blind Hollow Shaft Version

A	B	C		D		E
RS-53B	6	E	-	9F14B	-	H1151

A	Type
RS-53B	Ø 36 mm, Blind Hollow Shaft, IP69K Shaft Seal
RS-53C	Ø 36 mm, Blind Hollow Shaft, IP67 Shaft Seal

B	Bore (18mm Insertion Depth)
6	Ø 6 mm
8	Ø 8 mm
10	Ø 10 mm
A0	Ø 1/4"

C	Flange
E	Flange w/ Slotted Flex Mount
T	Flange w/ Long Torque Stop

D	Voltage Supply and Output Type
9F14B	8-30 VDC, CAN Highspeed

E	Type of Connection
H1151	Radial 5-pin M12 Eurofast Connector
C1M	Radial Cable (1 m PUR)

Accessories:

- See page H1, Connectivity, for cables and connectors
- See page G1, Accessories, for mounting attachments and couplings

We reserve the right to make technical alterations without prior notice.

Absolute, Singleturn Encoder Type RS-52 (Shaft) / RS-53 (Blind Hollow Shaft) SAE J1939

Dimensions: RS-52 Shaft Version

RS-52 Flange S
Connection C1M

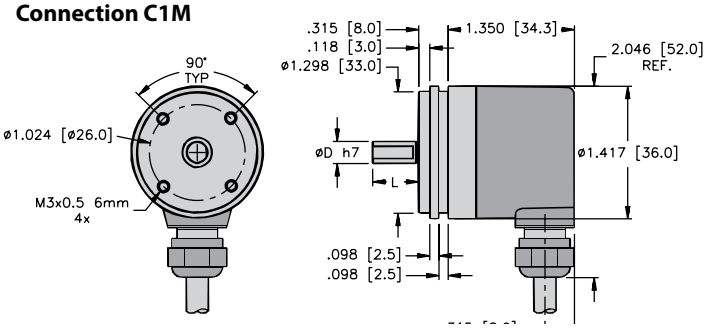

RS-52 Flange S
Connection H1151

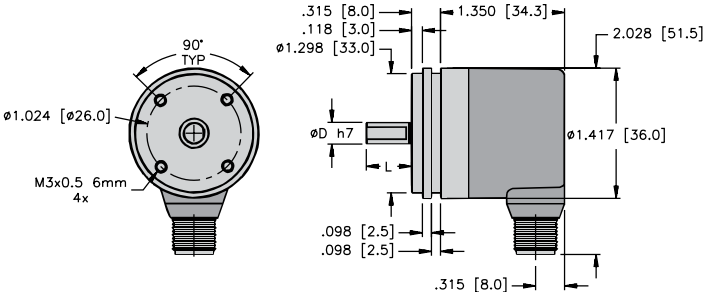

Mounting Advice:
The flanges and shafts of the encoder and drive should not be rigidly coupled together at the same time. We recommend the use of suitable couplings (see page G1, Accessories).

Dimensions: RS-53 Blind Hollow Shaft Version

RS-53 Flange T
Connection C1M

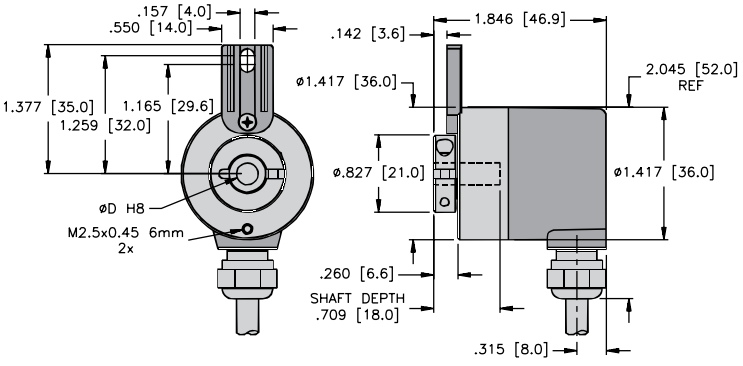

RS-53 Flange E
Connection H1151

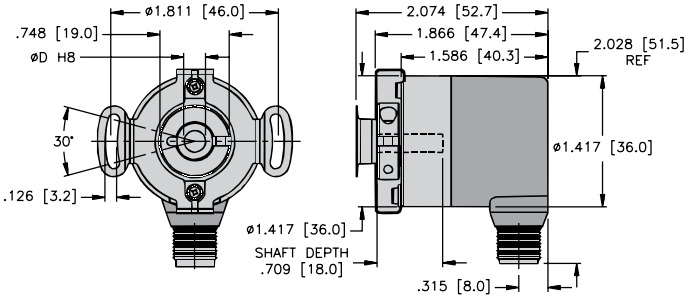

We reserve the right to make technical alterations without prior notice.

Absolute, Singleturn Magnetic Rings RMA-5 (Large Hollow Shaft)



High rotational speed | Protection level | Shock/vibration resistant | Reverse polarity protection | Wide temperature range

Robust
- **High shock and vibration resistance.**
- **Non-contact measuring system, free from wear, ensures a long service life.**
- **High resolution, 16,000 measuring steps/revolution.**
- **Direct measurement on shaft or axis.**



Compact
- **Requires very little installation space.**

Simple Installation
- **Distance monitoring by LED.**
- **Large mounting tolerance between magnetic band and sensor head.**
- **Connection by M12 connector.**

Mechanical Characteristics:

Max speed:	1000 rpm
Protection:	IP40 acc. to EN 60529
Working temperature:	+14 to +158 °F [-10 to +70 °C] (non condensing)
Storage temperature:	-13 to +185 °F [-25 to +85 °C]
Shock resistance:	500 g (5000 m/s²), 1 ms acc. to EN 60068-2-27
Vibration resistance:	30 g (300 m/s²), 10-2000 Hz acc. to EN 60068-2-6
Distance sensor head/magnetic band:	0.5 to 1.0 mm (recommended 0.8 mm)
Type of connection (standard)	M12 connector, 12-pin

Electrical Characteristics:

Power supply:	10-30 VDC ±10%
Residual ripple:	<10%
Current consumption:	max. 150 mA
Reverse polarity protected:	yes
Short circuit protected:	yes
RoHS compliant acc. to guideline 2011/65/EU	

Accuracy:

Measuring principle:	absolute
System accuracy:	±0.35 deg at 68 °F (20 °C)
Repeat accuracy:	±1 increment
Resolution:	0.0225°
LED, red:	lights up when distance too large

We reserve the right to make technical alterations without prior notice.

Absolute, Singleturn Magnetic Rings RMA-5 (Large Hollow Shaft)

SSI Interface:

Output driver:	RS485 transceiver type
Permissible load/channel:	max ±20 mA
Signal level:	
High	typ. 3.8 V
Low at I_{load} = 20 mA	typ. 1.3 V
Output Function:	25-bit (24 +1 failure bit for distance)
Code:	binary/gray(default), switchable
SSI clock rate:	80 kHz-0.4 MHz
Monoflop time:	≤40 µs
Data refresh rate:	≤250 µs

Standard Wiring:

Output Circuit JC25B:

Connection Type	Common (0V)	+V	+Clock	-Clock	+Data	-Data	-	-	-	-	-	-
M12 Eurofast:	1	2	3	4	5	6						

Part Number Key: RMA-5

A		B		C		D		E
RMA-5	-	Q20	-	30	-	JC25B	-	H11121

A	Type
RMA-5	Rotary Magnetic, 5 mm Pole Gap

B	Housing
Q20	20mm, IP40

C	Bore
30	30 MM

D	Voltage Supply and Output Type
JC25B	10-30 VDC, SSI, 25 bit

E	Type of Connection
H11121	12-pin M12 Eurofast Connector

Accessories:

- See page H1, Connectivity, for cables and connectors
- See page G1, Accessories, for mounting attachments and couplings

We reserve the right to make technical alterations without prior notice.

Absolute, Singleturn Magnetic Rings RMA-5 (Large Hollow Shaft)

Mounting orientation and permissible mounting tolerances

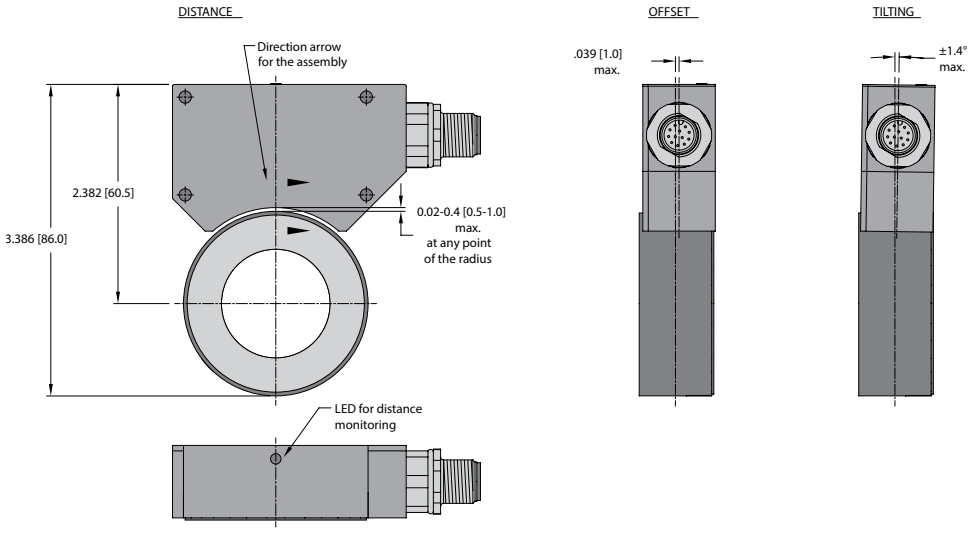

Mounting recommendation

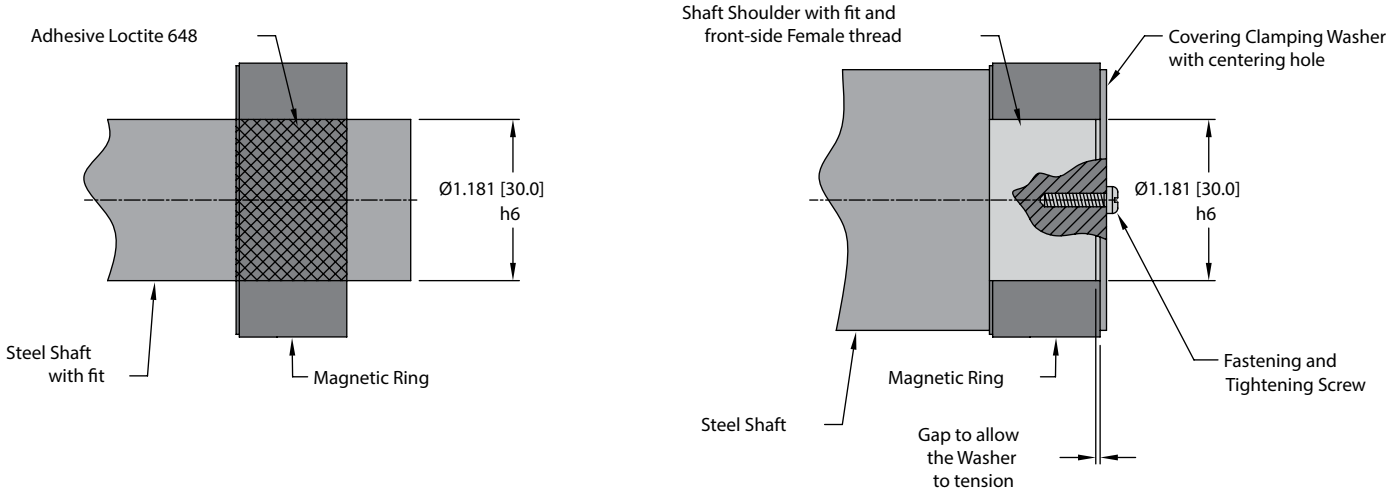

Dimensions: RMA-5

Sensor head

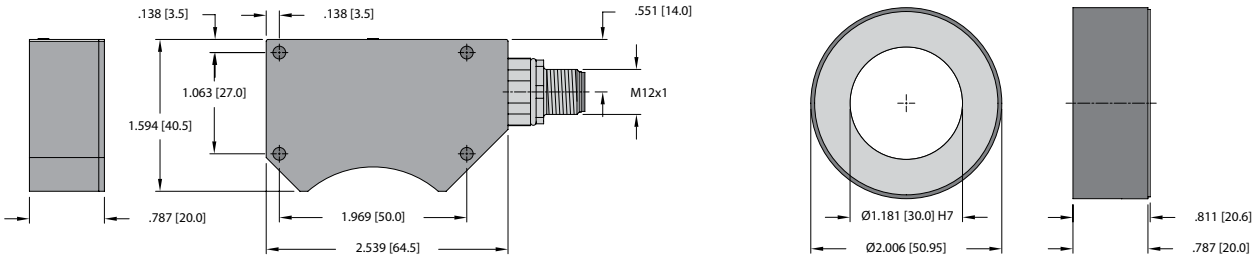

We reserve the right to make technical alterations without prior notice.

Absolute, Singleturn Type RS-44 (Shaft) / RS-48 (Blind / Hollow Shaft) SSI/BiSS-C



Bearing-Lock | High rotational speed | Temperature | High IP | High shaft load capacity | Shock/vibration resistant | Magnetic field proof | Short-circuit protected | Reverse polarity protection | SIN/COS | Optical sensor | Seawater-resistant version on request

Reliable

- **Increased ability to withstand vibration and installation errors.** Sturdy Bearing-Lock Design bearing structure **eliminates machine downtime and repairs.**
- **Fewer components and connection points increase the operational reliability:** Turck OptoASIC technology with highest integration density (Chip-on-Board).
- Die cast housing and protection up to IP67: **Remains sealed even when subjected to harsh everyday use.**
- Wide temperature range of -40 to +194 °F (-40 to +90 °C).
- **Easy diagnosis in case of fault condition.** Status indication by means of LED, sensor, voltage and temperature monitoring.



Absolute

Fast

- **High accuracy:** Update rate of the whole position value above 100 kHz for a max. jitter of 1 µs (real-time).
- **High productivity due to very short regulation cycles:** Clock rate with SSI up to 2 MHz, with BiSS-C up to 10 MHz.
- **High-resolution feedback system achievable in real-time:** SinCos incremental outputs.

Versatile

- **Connections for every application:** Tangential cable or M12 connector.
- **Open interfaces ensure flexibility and independence:** SSI or BiSS-C with Sine-Cosine-Option incremental track RS422.
- Multiple mounting brackets for easy installation.
- **Compact design.**
- **Fast and easy start-up on site:** Preset and reversal of rotation direction by control inputs.
- **Direct mounting on standard diameter shafts up to 10 mm** through hollow shaft up to 8 mm.

Mechanical Characteristics:

Max. speed: IP65 shaft or blind hollow shaft version: IP67 shaft version or IP65 hollow shaft version:	 12,000 RPM, continuous operation 10,000 RPM 10,000 RPM, continuous operation 8,000 RPM
Starting torque without shaft sealing:	< 1 oz-in (< 0.007 Nm)
Starting torque with shaft sealing:	< 1.4 oz-in (< 0.01 Nm)
Radial load capacity of shaft:	9 lbs (40 N)
Axial load capacity of shaft:	4.5 lbs (20 N)
Weight:	approx. 0.44 lbs (0.2 kg)
Protection acc. to EN 60 529:	Housing: IP67, Shaft: IP65, opt. IP67
Working temperature:	-40 to +194 °F (-40 to +90 °C)
Materials:	Shaft/Hollow shaft: stainless steel, Flange: aluminum, Housing: die cast zinc, Cable: PUR
Shock resistance acc. to DIN-IEC 68-2-27:	> 250 g (> 2,500 m/s²), 6 ms
Vibration resistance acc. to DIN-IEC 68-2-6:	> 10 g (>100 m/s²), 55-2,000 Hz

We reserve the right to make technical alterations without prior notice.

Turck Inc. | 3000 Campus Drive, Minneapolis, MN 55441 | T +1 800 544 7769 | F +1 763 553 0708 | www.turck.com

Absolute, Singleturn Type RS-44 (Shaft) / RS-48 (Blind / Hollow Shaft) SSI/BiSS-C

General Electrical Characteristics:

Supply voltage:	5 VDC ±5% or 10-30 VDC
Current consumption (without output load):	5 VDC: max. 60 mA, 10-30 VDC: max. 30 mA
Reverse polarity protection at power supply (+V):	yes
RoHS compliant according to EU guideline 2011/65/EU	
UL approval:	file E356899

General Interface Characteristics:

Output driver:	RS485 transceiver type
Permissible load/channel:	max. ±30 mA
Signal level high:	typ. 3.8 V
Signal level low at I_{load} = 20 mA:	typ. 1.3 V
Short-circuit protected outputs:	yes [1]

Interface Characteristics SSi:

Singleturn resolution:	10-17 bit
Code:	Binary or Gray
SSI clock rate:	≤ 14 bit: 50 kHz-2 MHz ≥ 15 bit: 50 kHz-125 kHz
Monoflop time:	≤ 15 µs
Note: If clock starts cycling within monoflop time, a second data transfer starts with the same data. If clock starts cycling after monoflop time, the data transfer starts with updated values. Max. update rate is dependent on clock speed, data length and monoflop time.	
Time jitter (data request to position latch):	≤ 1 µs up to 14 bits, 4 µs up to 15-17 bits
Status and Parity bit:	optional on request

Interface Characteristics BiSS-C:

Singleturn resolution:	10-17 bit
Code:	Binary
Clock rate:	up to 10 MHz
Max. update rate:	< 10 µs, depending on clock speed and data length
Time jitter (data request to position latch):	≤ 1 µs

Note:
- Bidirectional, programmable parameters are: resolution, code, direction, alarms and warnings
- CRC data verification

Incremental Output (A/B) 2048 ppr:

	Sin/Cos	RS 422 (TTL compatible)
Max. -3dB frequency:	400 kHz	400kHz
Signal level:	1 Vpp (±20%)	high: min. 2.5 V low: max. 0.5 V
Short-circuit proof:	yes [1]	yes [1]

[1] Short-circuit to 0 V or to output, one channel at a time, supply voltage correctly applied

SET Input:

Input characteristics:	active HIGH
Input type:	comparator
Signal level high:	min. 60% of V+ (supply voltage), max: V+
Signal level low:	max. 30% of V+ (supply voltage)
Input current:	< 0.5 mA
Min. pulse duration (SET):	10 ms
Input delay:	1 ms
New position data readable after:	1 ms
Internal processing time:	200 ms

The encoder can be set to zero at any position by means of a HIGH signal on the SET input. Other preset values can be factory programmed. The SET input has a signal delay time of approximately 1 ms. Once the SET function has been triggered, the encoder requires an internal processing time of approximately 200 ms before the new position data can be read. During this time the supply voltage must not be switched off. The set function should only be carried out when the encoder is at rest.

DIR Input:

A HIGH signal switches the direction of rotation from the default CW to CCW. This inverted function can also be factory programmed. If DIR is changed when the device is already switched on, then this will be interpreted as an error. The LED will come ON and the status output will switch to LOW.

Status Output:

Output driver:	Open collector, internal pull up resistor 22 kOhm
Permissible load:	max 20 mA
Signal level high:	+V
Signal level low:	< 1 V
Active at:	Low

The status output serves to display various alarm or error messages. In normal operation the status output is HIGH (open-collector with int. pull-up 22k).

An active status output (LOW) indicates:
- LED error (failure or aging)
- Over temperature
- Undervoltage

In the SSI mode, the fault indication can only be reset by switching off the power supply to the device.

Power-On Delay:

After Power-ON the device requires a time of approx. 150 ms before valid data can be read. Hot swapping of the encoder should be avoided.

We reserve the right to make technical alterations without prior notice.

Absolute, Singleturn Type RS-44 (Shaft) / RS-48 (Blind / Hollow Shaft) SSI/BiSS-C

Standard Wiring:

Output *C & *F (SSI or BiSS-C, SET, DIR, Status) (Connection CT*M)

Connection Type:	Common (0 V)	+V	+Clock	-Clock	+Data	-Data	SET	DIR	Status	PE
Cable:	WH	BN	GN	YE	GY	PK	BU	RD	VT	Shield

Output *C & *F (SSI or BiSS-C, SET, DIR) (Connection H1481)

Connection Type:	GND	+V	+Clock	-Clock	+Data	-Data	SET	DIR	Sheild/PE
M12 Eurofast	1	2	3	4	5	6	7	8	PH

Output *E & *G (SSI or BiSS-C, SET, DIR, 2048 Sin/Cos) (Connection CT*M)

Connection Type:	GND	+V	+Clock	-Clock	+Data	-Data	SET	DIR	A	A inv	B	B inv	PE
Cable:	WH	BN	GN	YE	GY	PK	BU	RD	BK	VT	GY/PK	RD/BU	Shield

Output *H (SSI or BiSS-C, SET, DIR, Voltage Sense Outputs) (Connection CT*M)

Connection Type:	GND	+V	+Clock	-Clock	+Data	-Data	SET	DIR	0 V sens	+V sens	PE
Cable:	WH	BN	GN	YE	GY	PK	BU	RD	VT	RD/BU	Shield

Output *J (SSI or BiSS-C, SET, DIR, 2048 Sin/Cos, Voltage Sense Outputs) (Connection CT*M)

Connection Type:	GND	+V	+Clock	-Clock	+Data	-Data	0 V sens	+V sens	A	A inv	B	B inv	PE
Cable:	WH	BN	GN	YE	GY	PK	BU	RD	BK	VT	GY/PK	RD/BU	Shield

Output *K & *L (SSI or BiSS-C, SET, DIR, 2048 inc. RS422) (Connection CT*M)

Connection Type:	GND	+V	+Clock	-Clock	+Data	-Data	A	A inv	B	B inv	PE
Cable:	WH	BN	GN	YE	GY	PK	BK	VT	GY/PK	RD/BU	Shield

Wiring Diagrams:

Male Encoder View

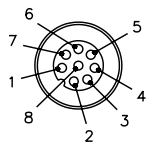

M12 Eurofast Pinout

Mating Cordset:
E-RKC 8T-264-*

* Length in meters.

We reserve the right to make technical alterations without prior notice.

Turck Inc. | 3000 Campus Drive, Minneapolis, MN 55441 | T +1 800 544 7769 | F +1 763 553 0708 | www.turck.com

Absolute, Singleturn Type RS-44 (Shaft) / RS-48 (Blind / Hollow Shaft) SSI/BiSS-C

Part Number Key: RS-44 Shaft Version

A	B	C		D	E		F
RS-44S	6	C	-	5F	10B	-	H1481

A	Type
RS-44S	Ø 39 mm, Shaft, IP67 Shaft Seal
RS-44T	Ø 39 mm, Shaft, IP65 Shaft Seal

B	Shaft (Ø x L)
6	Ø 6 mm x 12.5 mm
8	Ø 8 mm x 15 mm
10	Ø 10 mm x 20 mm
A0	Ø 1/4'' x 12.5 mm
A1	Ø 3/8'' x 5/8''

C	Flange
C	Ø 36 mm Clamping Flange
S	Ø 36 mm Servo Flange

D	Voltage Supply and Output Type			
	SSI (B)	SSI (G)	BiSS-C	Features
5 VDC	5F	3F	DF	
	5E	3E	DE	2048 PPR SinCos
	5H	3H	DH	Voltage Monitoring
	5J	3J	DJ	2048 PPR SinCos Plus Voltage Monitoring
	5K	3K	DK	2048 PPR Incr., RS422 (TTL Compatible)
10-30 VDC	5C	3C	DC	
	5G	3G	DG	2048 PPR SinCos
	5L	3L	DL	2048 PPR Incr., RS422

(B) = Binary, (G) = Gray

E	Resolution
10B	10 bit ST
12B	12 bit ST
13B	13 bit ST
14B	14 bit ST
17B	17 bit ST

F	Type of Connection
H1481	Axial 8-pin M12 Eurofast Connector*
CT1M	Tangential Cable (1 m PUR)
CT5M	Tangential Cable (5 m PUR)

* Only Available with Output '*F' and '*C'

Accessories:

- See page H1, Connectivity, for cables and connectors
- See page G1, Accessories, for mounting attachments and couplings

We reserve the right to make technical alterations without prior notice.

Absolute, Singleturn Type RS-44 (Shaft) / RS-48 (Blind / Hollow Shaft) SSI/BiSS-C

Part Number Key: RS-48 Blind / Hollow Shaft Version

A	B	C		D	E		F
RS-48B	6	E	-	5F	10B	-	H1481

A	Type
RS-48B	Ø 39 mm, Blind Hollow Shaft, IP65 Shaft Seal
RS-48H	Ø 39 mm, Hollow Shaft, IP65 Shaft Seal

B	Bore
6	Ø 6 mm
8	Ø 8 mm
10	Ø 10 mm* (14.5 mm Insertion Depth)
A0	Ø 1/4"

* Only available with RS-48B

C	Flange
E	Ø 36 mm Flange w/ Slotted Flex Mount
T	Ø 36 mm Flange w/ Long Torque Stop
T1	Ø 36 mm Flange w/ Short Torque Stop

E	Resolution
10B	10 bit ST
12B	12 bit ST
13B	13 bit ST
14B	14 bit ST
17B	17 bit ST

F	Type of Connection
H1481	Axial 8-pin M12 Eurofast Connector*
CT1M	Tangential Cable (1 m PUR)
CT5M	Tangential Cable (5 m PUR)

* Only available with output '*F' and '*C'

D	Voltage Supply and Output Type			
	SSI (B)	SSI (G)	BiSS-C	Features
5 VDC	5F	3F	DF	
	5E	3E	DE	2048 PPR SinCos
	5H	3H	DH	Voltage Monitoring
	5J	3J	DJ	2048 PPR SinCos Plus Voltage Monitoring
	5K	3K	DK	2048 PPR Incr., RS422 (TTL Compatible)
10-30 VDC	5C	3C	DC	
	5G	3G	DG	2048 PPR SinCos
	5L	3L	DL	2048 PPR Incr., RS422

(B) = Binary, (G) = Gray

We reserve the right to make technical alterations without prior notice.

Accessories:

- See page H1, Connectivity, for cables and connectors
- See page G1, Accessories, for mounting attachments and couplings

Absolute, Singleturn Type RS-44 (Shaft) / RS-48 (Blind / Hollow Shaft) SSI/BiSS-C

Dimensions: RS-44 Shaft Version

RS-44 Flange C
Connection CT*M

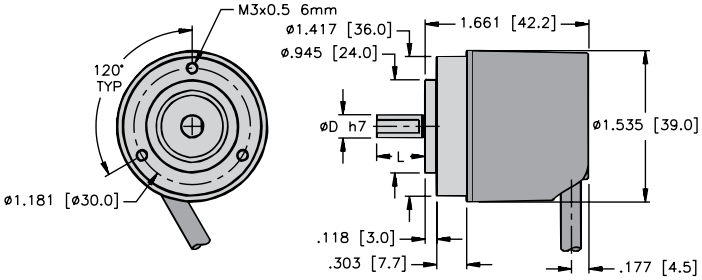

RS-44 Flange S
Connection H1481

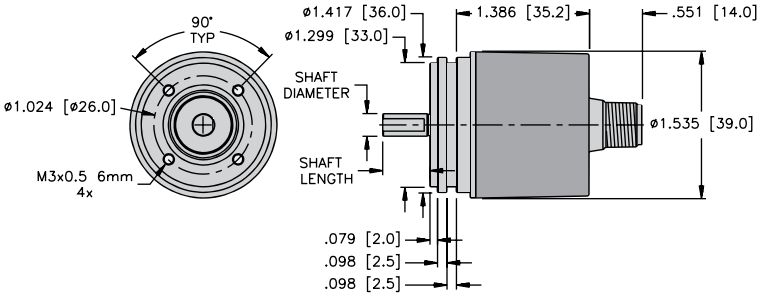

Mounting Advice:
The flanges and shafts of the encoder and drive should not be rigidly coupled together at the same time. We recommend the use of suitable couplings (see page G1, Accessories).

Dimensions: RS-48 Hollow Shaft Version

RS-48 Flange T1 & T (dotted)
Connection CT*M

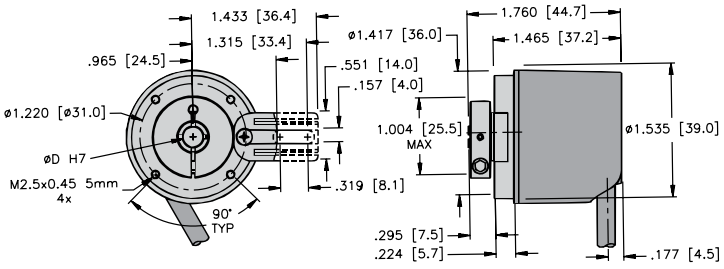

RS-48 Flange E (Blind Hollow Shaft)
Connection H1481

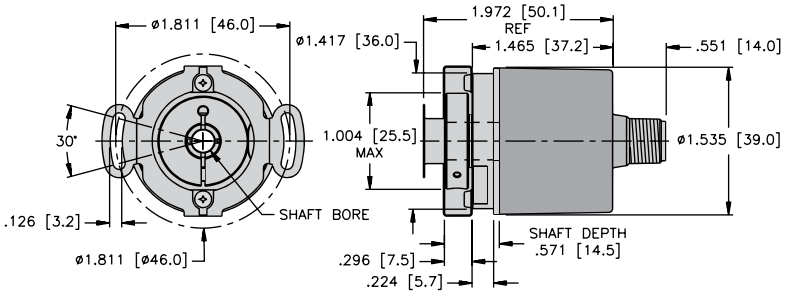

We reserve the right to make technical alterations without prior notice.

Absolute, Singleturn Type RS-45 (Shaft) / RS-49 (Blind Hollow Shaft) CANopen



Bearing-Lock | High rotational speed | Temperature | High IP | High shaft load capacity | Shock/vibration resistant | Magnetic field proof | Short-circuit protected | Reverse polarity protection

Rugged
- Sturdy bearing construction: Bearing-Lock design for resistance against vibration and installation errors.
- Ideal for use outdoors, thanks to IP67 protection.
- Wide temperature range: -40 to +185 °F (-40 to +85 °C).



Absolute

Compact
- **Overall size of 36 x 42 mm:** Hollow shaft of up to 8 mm, blind hollow shaft of up to 10 mm.

Versatile
- CANopen with current encoder profile.
- LSS services for configuration of the node address and baud rate.
- Variable PDO mapping in the memory.
- High-precision optical sensor technology can achieve a resolution of up to 17 bits.

Mechanical Characteristics:

Max. speed: IP65 shaft or blind hollow shaft version: IP67 shaft version or IP65 hollow shaft version:	12,000 RPM, continuous operation 10,000 RPM 10,000 RPM, continuous operation 8,000 RPM
Starting torque without shaft sealing:	< 1 oz-in (< 0.007 Nm)
Starting torque with shaft sealing:	< 1.4 oz-in (< 0.01 Nm)
Radial load capacity of shaft:	9.0 lbs (40 N)
Axial load capacity of shaft:	4.5 lbs (20 N)
Weight:	approx. 0.44 lbs (0.2 kg)
Protection acc. to EN 60 529:	Housing: IP67 Shaft: IP65, opt. IP67
Working temperature:	-40 to +185 °F (-40 to +85 °C)
Materials:	Shaft/Hollow shaft: stainless steel, Flange: aluminum, Housing: die cast zinc, Cable: PUR
Shock resistance acc. to DIN-IEC 68-2-27:	> 250g (> 2,500 m/s²), 6 ms
Vibration resistance acc. to DIN-IEC 68-2-6:	> 10 g (>100 m/s²), 55-2,000 Hz

Diagnostic LED (two-color, red/green):

LED ON or blinking	red:	error display
	green:	status display

General Electrical Characteristics:

Supply voltage:	10-30 VDC
Current consumption (no load):	80 mA
Reverse connection of the supply voltage (+V):	yes
RoHS compliant acc. to EG-guideline 2002/95/EG	
UL approval:	file E356899

Interface Characteristics CANopen:

Resolution Singleturn:	1-65536 (16 bit), scaleable: 1-65536
Default value Singleturn:	8192 (13 bit)
Code:	Binary
Interface:	CAN High-Speed according to ISO 11898, Basic and Full-CAN , CAN Specification 2.0 B
Protocol:	CANopen profile DS 406 V3.2 with manufacturer specific add-ons LSS-Service DS305 V2.0
Baud rate:	10-1000 kbit/s (software configurable)
Node address:	1-127 (software configurable)
Termination switchable:	Software configurable
LSS Protocol	CIA LSS protocol DS305 Global command support for node address and baud rate. Selective commands via attributes of the identity object

We reserve the right to make technical alterations without prior notice.

Turck Inc. | 3000 Campus Drive, Minneapolis, MN 55441 | T +1 800 544 7769 | F +1 763 553 0708 | www.turck.com

Absolute, Singleturn Type RS-45 (Shaft) / RS-49 (Blind Hollow Shaft) CANopen

General Information About CANopen

The CANopen encoder series support the latest CANopen communication profile according to DS 301 V4.02 . In addition, device specific profiles, like the DS 406 V3.2, are available.

The following operating modes may be selected: Polled Mode, Cyclic Mode, Sync Mode. Moreover, scale factors, preset values, limit switch values and many other additional parameters can be programmed via the CANbus. When switching the device on, all parameters, which have been saved on a flash memory to protect them against power failure, are loaded again. Position, speed and status of the working area output values may be combined in a freely variable way as PDO mapping.

The encoders are available with a connector or a cable connection. The device address and baud rate may be set/modified by means of the software. A two-color LED indicates the operating or fault status of the CANbus, as well as the status of the internal diagnostics.

CANopen Communication Profile DS301 V4.02

The following functionality is integrated. Class C2 functionality:

- NMT Slave
- Heartbeat Protocol
- Identity Object
- Error Behavior Object
- Variable PDO Mapping self-start programmable (Power on to operational), 3 sending PDO's
- Node address, baud rate and CANbus/programmable termination

CANopen Encoder Profile DS406 V3.2

The following parameters may be programmed:

- Event mode
- One work area with upper and lower limit and the corresponding output states
- Variable PDO mapping for position, speed, work area status
- Extended failure management for position sensing
- User interface with visual display of bus and failure status: 1 LED, two-color
- Customer-specific memory - 16 bytes
- Customer-specific protocol
- "Watchdog controlled" device

LSS Layer Setting Services DS305 V2.0

- Global support of Node-ID and baud rate
- Selective protocol via identity object (1018h)

We reserve the right to make technical alterations without prior notice.

Standard Wiring:

Connection Type:	+V	0 V	CAN GND	CAN High	CAN Low
Cable:	BN	WH	GY	GN	YE

Absolute, Singleturn Type RS-45 (Shaft) / RS-49 (Blind Hollow Shaft) CANopen

Part Number Key: RS-45 Shaft Version

A	B	C		D		E
RS-45S	6	C	-	9D16B	-	CT1M

A	Type
RS-45S	Ø 39 mm, Shaft, IP67 Shaft Seal
RS-45T	Ø 39 mm, Shaft, IP65 Shaft Seal

B	Shaft (Ø x L)
6	Ø 6 mm x 12.5 mm
8	Ø 8 mm x 15 mm
10	Ø 10 mm x 20 mm
A0	Ø 1/4" x 12.5 mm
A1	Ø 3/8" x 5/8"

C	Flange
C	Ø 36 mm Clamping Flange
S	Ø 36 mm Servo Flange

D	Voltage Supply and Output Type
9D16B	10-30 VDC, CANopen DS301 V4.02

E	Type of Connection
CT1M	Tangential Cable (1 m PUR)
CT5M	Tangential Cable (5 m PUR)

Part Number Key: RS-49 Blind Hollow Shaft Version

A	B	C		D		E
RS-49B	6	E	-	9D16B	-	CT1M

A	Type
RS-49B	Ø 39 mm, Blind Hollow Shaft, IP65 Shaft Seal

B	Bore (14.5 mm Insertion Depth)
6	Ø 6 mm
8	Ø 8 mm
10	Ø 10 mm
A0	Ø 1/4"

C	Flange
E	Ø 36 mm Flange w/ Slotted Flex Mount
T	Ø 36 mm Flange w/ Long Torque Stop
T1	Ø 36 mm Flange w/ Short Torque Stop

D	Voltage Supply and Output Type
9D16B	10-30 VDC, CANopen DS301 V4.02

E	Type of Connection
CT1M	Tangential Cable (1 m PUR)
CT5M	Tangential Cable (5 m PUR)

We reserve the right to make technical alterations without prior notice.

Accessories:

- See page H1, Connectivity, for cables and connectors
- See page G1, Accessories, for mounting attachments and couplings

Absolute, Singleturn Type RS-45 (Shaft) / RS-49 (Blind Hollow Shaft) CANopen

Dimensions: RS-45 Shaft Version

RS-45 Flanges C
Connection CT*M

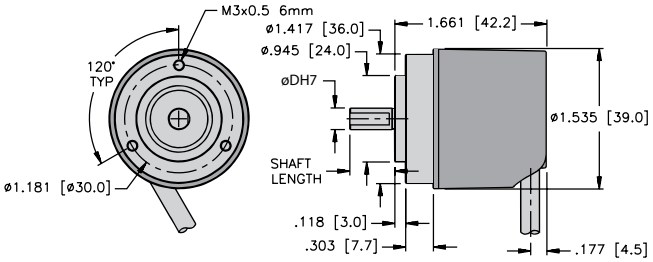

RS-45 Flanges S
Connection CT*M

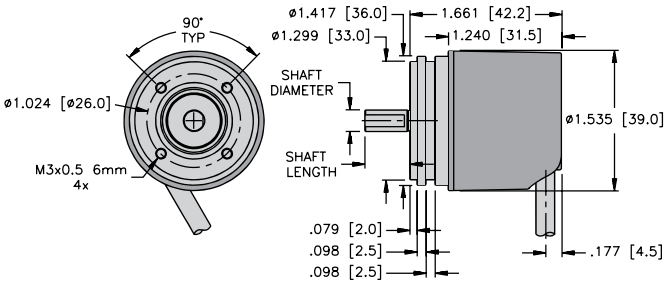

Mounting Advice:
The flanges and shafts of the encoder and drive should not be rigidly coupled together at the same time. We recommend the use of suitable couplings (see page G1, Accessories).

Dimensions: RS-49 Blind Hollow Shaft Version

RS-49 Flange T1 and T (dotted)
Connection CT*M

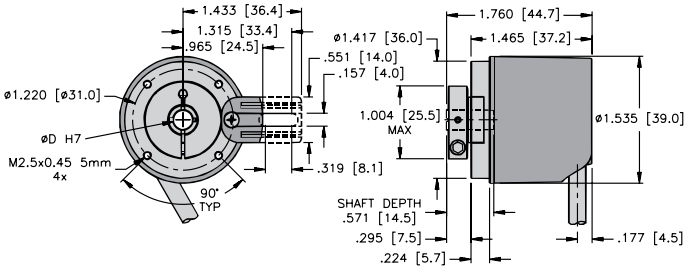

RS-49 Flanges E
Connection CT*M

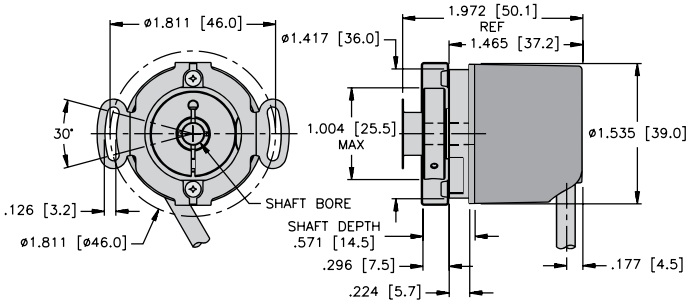

We reserve the right to make technical alterations without prior notice.

Absolute, Singleturn Type RS-24 (Shaft) / RS-31 (Hollow Shaft) SSI/BiSS-C



Bearing-Lock | High rotational speed | Temperature | High IP | High shaft load capacity | Shock/vibration resistant | Magnetic field proof | Short-circuit protected | Reverse polarity protection | SIN/COS | Optical sensor | Seawater-resistant version on request

Reliable

- **Increased ability to withstand vibration and installation errors.** Sturdy Bearing-Lock design structure **eliminates machine downtime and repairs.**
- **Fewer components and connection points increase the operational reliability.** Turck OptoASIC technology with highest integration density (Chip-on-Board).
- Die cast housing and protection up to IP67: **Remains sealed even when subjected to harsh everyday use.**
- Wide temperature range of -40 to +194 °F (-40 to +90 °C).
- **Easy diagnosis in case of fault condition.** Status indication by means of LED, sensor, voltage and temperature monitoring.



Absolute

Fast

- **High accuracy:** Update rate of the whole position value above 100 kHz for a max. jitter of 1 µs (real-time).
- **High productivity due to very short regulation cycles:** Clock rate with SSI up to 2 MHz, with BiSS-C up to 10 MHz.
- **High-resolution feedback system achievable in real-time:** SinCos incremental outputs.

Versatile

- **Connections for every application:** Cable, M12 connector or M12 connector.
- **Open interfaces ensure flexibility and independence:** SSI or BiSS-C with Sine-Cosine-Option.
- Multiple mounting brackets for easy installation.
- **Only the functionality really needed by the user is implemented:** Status LED and set key are optional.
- **Fast and easy start-up:** Set key or preset by means of a control input.
- **Direct mounting on large diameter shafts** through hollow shaft up to 15 mm.

Mechanical Characteristics:

Shaft Version:	
Max. speed without shaft sealing (IP65) up to 158 °F (70 °C):	12,000 RPM, continuous 10,000 RPM
Max. speed without shaft sealing (IP65) up to Tmax:	8,000 RPM, continuous 5,000 RPM
Max. speed with shaft sealing (IP67) up to 158 °F (70 °C):	11,000 RPM, continuous, 9 000 RPM
Max. speed with shaft sealing (IP67) up to Tmax:	8,000 RPM, continuous 5,000 RPM
Hollow Shaft Version:	
Max. speed without shaft sealing (IP65) up to 158 °F (70 °C):	9,000 RPM, continuous 6,000 RPM
Max. speed without shaft sealing (IP65) up to Tmax:	6,000 RPM, continuous 3,000 RPM
Max. speed with shaft sealing (IP67) up to 158 °F (70 °C):	8,000 RPM, continuous 4,000 RPM
Max. speed with shaft sealing (IP67) up to Tmax:	4,000 RPM, continuous 2,000 RPM
Starting torque without shaft sealing (IP65):	Shaft version: < 1.4 oz-in (< 0.01 Nm) Hollow shaft version: < 4.25 oz-in (< 0.03 Nm)
Starting torque with shaft sealing (IP67):	< 7 oz-in (< 0.05 Nm)
Moment of inertia:	Shaft version: 0.16 oz-in^2 (3.0 x 10^{-6} kgm^2) Hollow shaft version: 0.328 oz-in^2 (6.0 x 10^{-6} kgm^2)
Radial load capacity of shaft:	18 lbs (80 N)
Axial load capacity of shaft:	9 lbs (40 N)
Weight:	approx. 0.77 lbs (0.35 kg)
Protection acc. to EN 60 529:	Housing: IP67, Shaft: IP65, opt. IP67
Working temperature:	-40 to +194 °F (-40 to +90 °C) [1]
Materials:	Shaft/hollow shaft: stainless steel, Flange: aluminum, Housing: die cast zinc, Cable: PVC
Shock resistance acc. to DIN-IEC 68-2-27:	> 250 g (> 2,500 m/s^2), 6 ms
Vibration resistance acc. to DIN-IEC 68-2-6:	> 10 g (>100 m/s^2), 55-2,000 Hz

[1] Cable versions: -22 to +167 °F (-30 to +75 °C)



Encoder with tangential cable outlet

We reserve the right to make technical alterations without prior notice.

Absolute, Singleturn Type RS-24 (Shaft) / RS-31 (Hollow Shaft) SSI/BiSS-C

General Electrical Characteristics:

Supply voltage:	5 VDC + 5% or 10-30 VDC
Current consumption (without output load):	5 VDC: max. 70 mA, 10-30 VDC: max. 45 mA
Reverse polarity protection at power supply (+V):	Yes (only 10-30 VDC)
RoHS compliant acc. to EU guideline 2011/65/EU	
UL approval:	file E356899

General Interface Characteristics:

Output driver:	RS485 Transceiver type
Permissible load/channel:	max. 20 mA
Signal level high:	typ. 3.8 V
Signal level low at I_{load} = 20 mA:	typ. 1.3 V
Short-circuit protected:	Yes [2]

Interface Characteristics SSi:

Singleturn resolution:	10-14 bits and 17 bits [3]
Code:	Binary or Gray
SSI clock rate:	≤ 14 bit 50 kHz-2 MHz ≥ 15 bit 50 kHz-125 kHz
Monoflop time:	≥ 15 µs [3]

Note:
If clock starts cycling within monoflop time, a second data transfer starts with the same data. If clock starts cycling after monoflop time, the data transfer starts with updated values. Maximum update rate is dependent on clock speed, data length and monoflop time.

Time jitter (data request to position latch):	< 1 µs up to 14 bits, 4 µs at 15-17 bits
Status and Parity bit:	optional on request

Interface Characteristics BiSS-C:

Singleturn resolution:	10-14 bits and 17 bits customer programmable [3]
Code:	Binary
Interfaces:	RS485
Clock rate:	up to 10 MHz
Max. update rate:	< 10 µs, depending on clock speed and data length
Time jitter (data request to position latch):	≤ 1 µs

Note:
- Bidirectional, programmable parameters are: resolution, code, direction, alarms and warnings
- Multicycle data output, e.g. for temperature
- CRC data verification

[2] Short-circuit to 0 V or to output, one channel at a time, supply voltage correctly applied
[3] Other options upon request

SET (zero or defined value) and DIRection (CW/CCW) Control Inputs:

Input characteristics:	High active
Receiver type:	Comparator
Signal level high:	min. 60% of V+ (Supply voltage), max: V+
Signal level low:	max. 25% of V+ (Supply voltage)
Input current:	< 0.5 mA
Min. pulse duration (SET):	10 ms
Timeout after SET input:	14 ms
Reaction Time (DIR input):	1 ms

The encoder can be set to zero at any position by means of a HIGH signal on the SET input or by pressing the optional SET key. Other preset values can be factory-programmed. The SET input has a signal delay time of approximately 1 ms. Once the SET function has been triggered, the encoder requires an internal processing time of approximately 15 ms before the new position data can be read. During this time, the LED is ON and the status output is at LOW.

Status Output and LED:

Output driver:	Open collector, internal pull up resistor 22 kOhm
Permissible load:	Max. 20 mA
Signal level high:	+V
Signal level low:	< 1 V
Active at:	Low

The optional LED (red) and the status output serve to display various alarm or error messages. In normal operation the LED is OFF and the status output is HIGH (open-collector with int. pull-up 22k).

If the LED is ON (status output LOW) this indicates:
- Sensor error, singleturn or multiturn (soiling, glass breakage etc.)
- LED error, failure or aging
- Over or under-temperature

In the SSI mode, the fault indication can only be reset by switching off the power-supply to the device.

DIR Input:

A HIGH signal switches the direction of rotation from the default clockwise to counter-clockwise. This inverted function can also be factory-programmed. If DIR is changed when the device is already switched on, then this will be interpreted as an error. The LED will come ON and the status output will switch to LOW.

Option Incremental Output (A/B), 2048 ppr:

	Sin/Cos	RS422 (TTL compatible)
-3dB frequency:	400 kHz	400 kHz
Signal level:	1 Vpp (± 20 %)	high: min. 2.5 V low: max. 0.5 V
Short-circuit proof:	Yes	Yes

Power-On Delay:

After Power-ON the device requires a time of approx. 150 ms before valid data can be read.

We reserve the right to make technical alterations without prior notice.

Absolute, Singleturn Type RS-24 (Shaft) / RS-31 (Hollow Shaft) SSI/BiSS-C

Standard Wiring:

Output Circuit *C or *F and (2 Control Inputs, 1 Status Output) (Connection C*1M or 12M23*)

Connection Type:	Common (0 V)	+V	+Clock	-Clock	+Data	-Data	ST	DIR	Status	NC	NC	NC	PE
M23 Multifast:	1	2	3	4	5	6	7	8	9	10	11	12	PH
Cable:	WH	BN	GN	YE	GY	PK	BU	RD	BK	-	-	-	Shield

Output Circuit *H and (2 Control Inputs, 1 Status Output, Voltage Monitor Outputs) (Connection C*1M or 12M23*)

Connection Type:	Common (0 V)	+V	+Clock	-Clock	+Data	-Data	ST	DIR	Status	NC	0 V Sens	+V Sens	PE
M23 Multifast:	1	2	3	4	5	6	7	8	9	10	11	12	PH
Cable:	WH	BN	GN	YE	GY	PK	BU	RD	BK	-	GY/PK	RD/BU	Shield

Output Circuit *E, *G, *K or *L, and (2 Control Inputs, Incremental Track or Sine/Cosine) (Connection C*1M or 12M23*)

Connection Type:	Common (0 V)	+V	+Clock	-Clock	+Data	-Data	ST	DIR	Sin A	Sin inv A-	Cos B	Cos inv B-	PE
M23 Multifast:	1	2	3	4	5	6	7	8	9	10	11	12	PH
Cable:	WH	BN	GN	YE	GY	PK	BU	RD	BK	VT	GY/PK	RD/BU	Shield

Output Circuit *J or *M, and (Sine/Cosine or Incremental Monitor, Voltage Outputs) (Connection C*1M or 12M23*)

Connection Type:	Common (0 V)	+V	+Clock	-Clock	+Data	-Data	Sin A	Sin inv A-	Cos B	Cos inv B-	0 V Sens	+V Sens	PE
M23 Multifast:	1	2	3	4	5	6	7	8	9	10	11	12	PH
Cable:	WH	BN	GN	YE	GY	PK	BU	RD	BK	VT	GY/PK	RD/BU	Shield

Output Circuit *C or *F, and (2 Control Inputs) (Connection H1*81)

Connection Type:	Common (0 V)	+V	+Clock	-Clock	+Data	-Data	SET	DIR	Shield/PE
M12 Eurofast:	1	2	3	4	5	6	7	8	PH

Wiring Diagrams:

Male Encoder View	
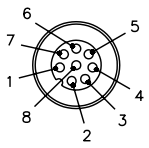	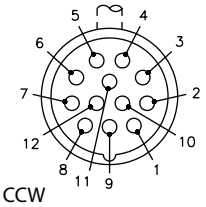
M12 Eurofast Pinout	M23 Multifast Pinout
Mating Cordset: **E-RKC 8T-264-***	Mating Cordset: **E-CKM 12-1687-*/A**

* Length in meters.



SET key: For quick, simple on-site start-up.

LED: Status indication for sensor, voltage and temperature monitoring.

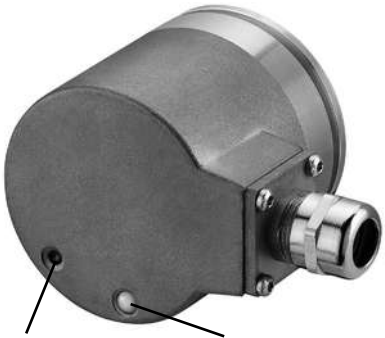

SET key: For quick, simple on-site start-up.

LED: Status indication for sensor, voltage and temperature monitoring.

We reserve the right to make technical alterations without prior notice.

Absolute, Singleturn Type RS-24 (Shaft) / RS-31 (Hollow Shaft) SSI/BiSS-C

Part Number Key: RS-24 Shaft Version

A	B	C		D	E		F		G
RS-24S	6	C	-	5F	10B	-	H1181	/	N16

A	Type
RS-24S	Ø 58 mm, Shaft, IP67 Shaft Seal
RS-24T	Ø 58 mm, Shaft, IP65 Shaft Seal

B	Shaft (Ø x L)
6	Ø 6 mm x 10 mm
10	Ø 10 mm x 20 mm
A0	Ø 1/4" x 7/8"
A1	Ø 3/8" x 7/8"

C	Flange
C	Ø 58 mm Clamping Flange
S	Ø 58 mm Servo Flange
R	2.5" Square Flange

E	Resolution
10B	10 bit ST
11B	11 bit ST
12B	12 bit ST
13B	13 bit ST
14B	14 bit ST
17B	17 bit ST
21B	21 bit ST[1]

[1] Only available with output '*F' and '*C'

F	Type of Connection
H1181	Radial 8-pin M12 Eurofast Connector[2]
H1481	Axial 8-pin M12 Eurofast Connector[2]
12M23	Radial 12-pin M23 Multifast Connector
12M23A	Axial 12-pin M23 Multifast Connector
C1M	Radial Cable (1 m PVC)
CA1M	Axial Cable (1 m PVC)

[2] Only available with output '*F' and '*C'

G	Options
(BLANK)	SET Button and Status LED (Standard)
N16	No Options
N43	Status LED

D	Voltage Supply and Output Type			
	SSI (B)	SSI (G)	BiSS-C	Features
5VDC	5F	3F	DF	
	5E	3E	DE	2048 PPR SinCos
	5H	3H	DH	Voltage Monitoring
	5J	3J	DJ	2048 PPR SinCos Plus Voltage Monitoring
	5K	3K	DK	2048 PPR Incr., RS422 (TTL-Compatible)
	5M	3M	DM	2048 PPR Incr., RS422 (TTL-compatible) Plus Voltage Monitoring
10-30VDC	5C	3C	DC	
	5G	3G	DG	2048 PPR SinCos
	5L	3L	DL	2048 PPR Incr., RS422

(B) = Binary, (G) = Gray

We reserve the right to make technical alterations without prior notice.

Absolute, Singleturn Type RS-24 (Shaft) / RS-31 (Hollow Shaft) SSI/BiSS-C

Part Number Key: RS-31 Hollow Shaft Version

A	B	C		D	E		F		G
RS-31H	10	E	-	5F	10B	-	H1181	/	N16

A	Type
RS-31H	Ø 58 mm, Hollow Shaft, IP67 Shaft Seal
RS-31I	Ø 58 mm, Hollow Shaft, IP65 Shaft Seal

B	Bore
10	Ø 10 mm
12	Ø 12 mm
14	Ø 14 mm
15	Ø 15 mm
A1	Ø 3/8"
A3	Ø 1/2"

C	Flange
E	Flange w/ Ø 63 mm Slotted Flex Mount
E1	Flange w/ Ø 65 mm Flex Mount
T	Flange w/ Torque Stop

E	Resolution
10B	10 bit ST
11B	11 bit ST
12B	12 bit ST
13B	13 bit ST
14B	14 bit ST
17B	17 bit ST
21B	21 bit ST[1]

[1] Only available with output '*F' and '*C'

F	Type of Connection
H1181	Radial 8-pin M12 Eurofast Connector[2]
12M23	Radial 12-pin M23 Multifast Connector[2]
C1M	Radial Cable (1 m PVC)
CT1M	Tangential Cable (1 m PVC)

[2] Only available with output '*F' and '*C'

G	Options
(BLANK)	SET Button and Status LED (Standard)
N16	No Option
N43	Status LED

D	Voltage Supply and Output Type			
	SSI (B)	SSI (G)	BiSS-C	Features
5VDC	5F	3F	DF	
	5E	3E	DE	2048 PPR SinCos
	5H	3H	DH	Voltage Monitoring
	5J	3J	DJ	2048 PPR SinCos Plus Voltage Monitoring
	5K	3K	DK	2048 PPR Incr., RS422 (TTL-Compatible)
	5M	3M	DM	2048 PPR Incr., RS422 (TTL-compatible) Plus Voltage Monitoring
10-30VDC	5C	3C	DC	
	5G	3G	DG	2048 PPR SinCos
	5L	3L	DL	2048 PPR Incr., RS422

(B) = Binary, (G) = Gray

We reserve the right to make technical alterations without prior notice.

Turck Inc. | 3000 Campus Drive, Minneapolis, MN 55441 | T +1 800 544 7769 | F +1 763 553 0708 | www.turck.com

Absolute, Singleturn Type RS-24 (Shaft) / RS-31 (Hollow Shaft) SSI/BiSS-C

Dimensions: RS-24 Shaft Version

RS-24 Flange R
Connection C1M & CA1M

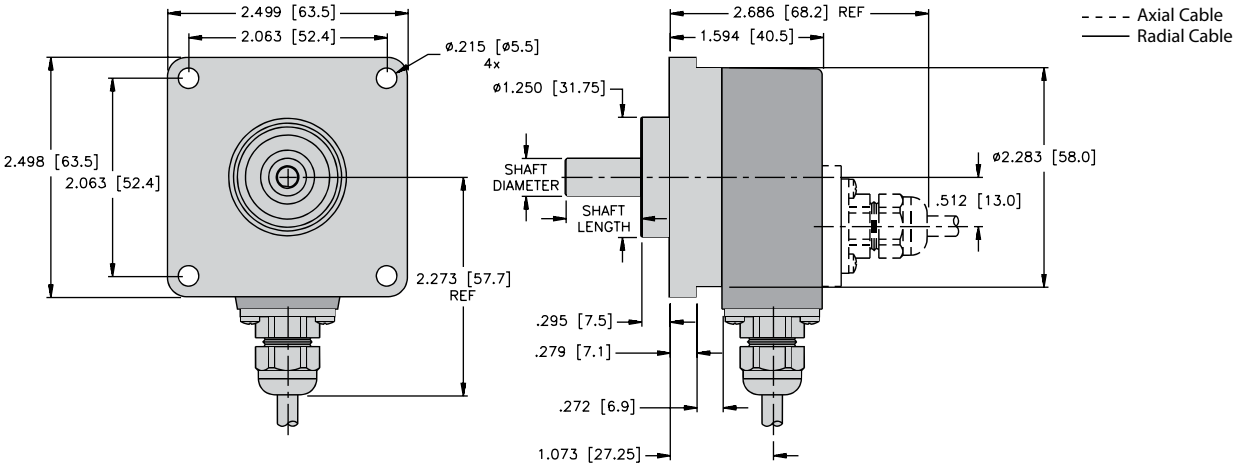

RS-24 Flange S
Connection H1181 & H1481

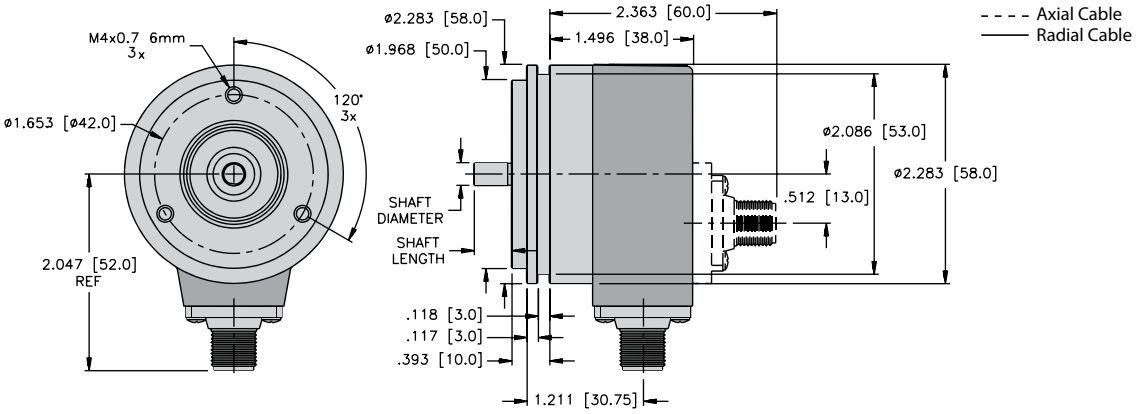

RS-24 Flange C
Connection 12M23 & 12M23A

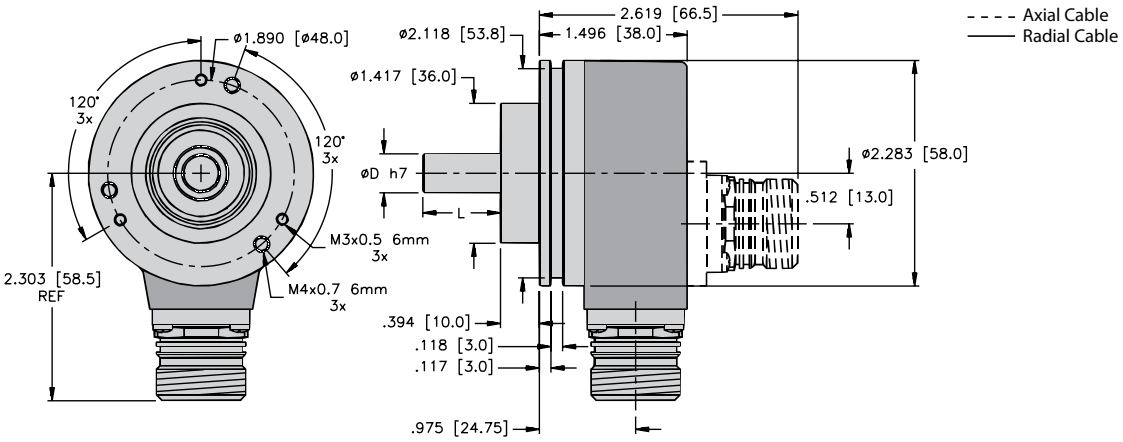

We reserve the right to make technical alterations without prior notice.

Absolute, Singleturn Type RS-24 (Shaft) / RS-31 (Hollow Shaft) SSI/BiSS-C

Dimensions: RS-31 Hollow Shaft Version

RS-31 Flange E1
Connection C1M

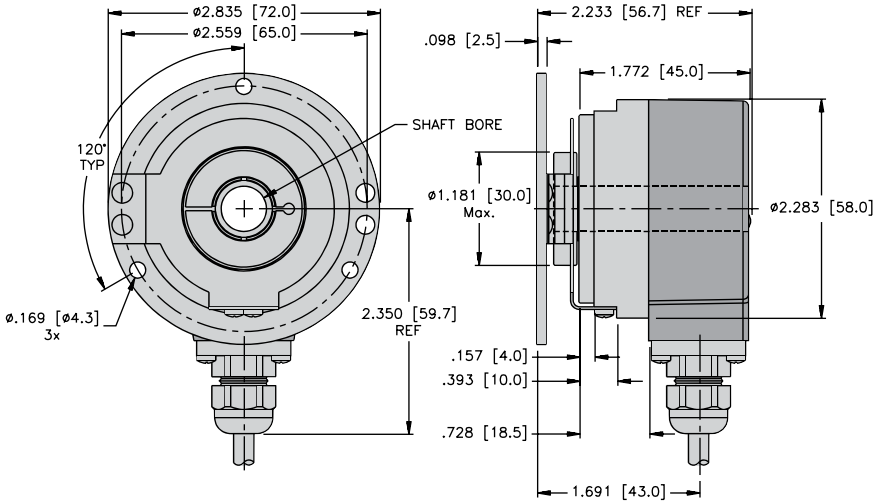

RS-31 Flange E
Connection 12M23

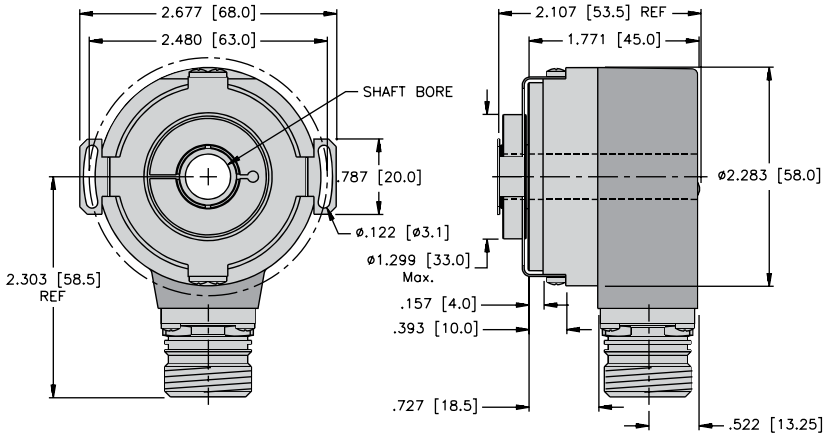

RS-31 Flange T
Connection H1181

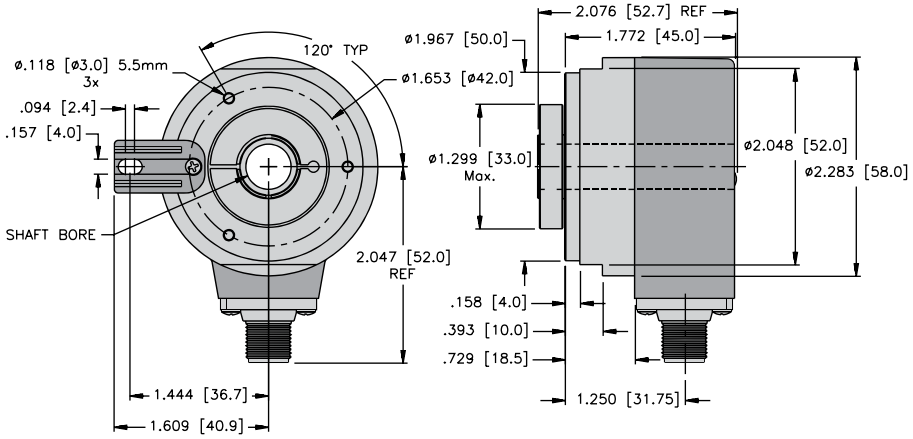

We reserve the right to make technical alterations without prior notice.

Turck Inc. | 3000 Campus Drive, Minneapolis, MN 55441 | T +1 800 544 7769 | F +1 763 553 0708 | www.turck.com

Absolute, Singleturn Type RS-24 (Shaft) / RS-31 (Hollow Shaft) SSI/BiSS-C

Dimensions: RS-31 Hollow Shaft Version

RS-31 Flange T
Connection CT1M

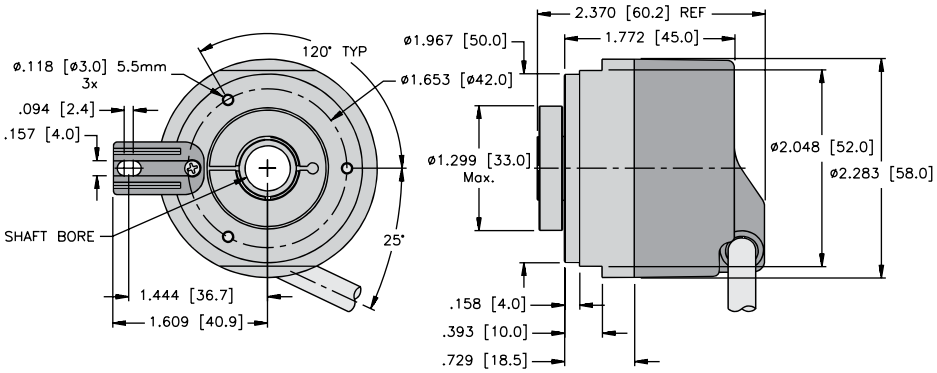

We reserve the right to make technical alterations without prior notice.

Absolute, Singleturn Type RS-25 (Shaft) / RS-33 (Blind Hollow Shaft) CANopen



Bearing Lock | High rotational speed | Temperature | High IP | High shaft load capacity | Shock/vibration resistant | Magnetic field proof | Short-circuit protected | Reverse polarity protection | Optical sensor | Seawater-resistant version on request

Reliable

- **Increased ability to withstand vibration and installation errors.** Sturdy Bearing Lock design structure **eliminates machine downtime and repairs.**
- **Fewer components and connection points increase the operational reliability.** Turck OptoASIC technology with highest integration density (Chip-on-Board).
- Die cast housing and protection up to IP67: **remains sealed even when subjected to harsh everyday use.**
- Wide temperature range.



Absolute

Fast

- **Genuine time-servo position detection of several axes.** Extended CAN Sync Mode with real-time position acquisition.
- **Fast data availability while reducing the load on the bus and the controller.** Intelligent functions like the transmission of speed, acceleration or exiting a working area.

Versatile

- **CANopen fieldbus** with the latest profiles.
- **Connections for every application:** Bus terminal cover with M12 connector or cable connection or fixed connection with M12, M23 or D-Sub connector.
- **Real-time data: Position, speed or working area.** Variable PDO mapping in the memory.
- **Fast, error-free start-up, without setting any switches.** Node address, baud rate and termination can be programmed via the bus.

Mechanical Characteristics:

Max. speed without shaft sealing (IP65) up to 158 °F (70 °C): Max. speed without shaft sealing (IP65) up to Tmax: Max. speed with shaft sealing (IP67) up to 158 °F (70 °C): Max. speed with shaft sealing (IP67) up to Tmax:	9,000 RPM, continuous 7,000 RPM 7,000 RPM, continuous 4,000 RPM 8,000 RPM, continuous 6,000 RPM 6,000 RPM, continuous 3,000 RPM
Starting torque without shaft sealing (IP65):	< 1.4 oz-in (< 0.01 Nm)
Starting torque with shaft sealing (IP67):	Shaft version: < 7 oz-in (< 0.05 Nm) Hollow shaft version: < 4.25 oz-in (<0.03 Nm)
Moment of inertia:	Shaft version: 0.16 oz-in^2 (3.0 x 10^{-6} kgm^2) Hollow shaft version: 0.328 oz-in^2 (6.0 x 10^{-6} kgm^2)
Radial load capacity of shaft:	18 lbs (80 N)
Axial load capacity of shaft:	9 lbs (40 N)
Weight:	approx. 1.17 lbs (0.53 kg) with bus terminal cover approx. 1.10 lbs (0.50 kg) with fixed connection
Protection acc. to EN 60 529:	Housing: IP67, Shaft: IP65, opt. IP67
Working temperature:	-40 to +176 °F (-40 to +80 °C) [1]
Materials:	Shaft/hollow shaft: stainless steel, Flange: aluminum, Housing: die cast zinc, Cable: PVC
Shock resistance acc. to DIN-IEC 68-2-27:	> 250 g (> 2,500 m/s^2), 6 ms
Vibration resistance acc. to DIN-IEC 68-2-6:	> 10 g (> 100 m/s^2), 55-2,000 Hz

[1] Cable version: -22 to +167 °F (-30 to +75 °C)



SET key: For quick, simple on-site start-up.

Green, red and yellow LEDs: Failure-free operation immediately visible on the bus.

We reserve the right to make technical alterations without prior notice.

Absolute, Singleturn Type RS-25 (Shaft) / RS-33 (Blind Hollow Shaft) CANopen

General Electrical Characteristics:

Supply voltage:	10-30 VDC
Current consumption (without output load):	Max. 90 mA
Reverse polarity protection at power supply (+V):	Yes
RoHS compliant acc. to EU guideline 2011/65/EU	
UL approval:	file E356899

SET Control Button (zero or defined value, option):

Protected against accidental activation, can only be depressed with the tip of a ball pen or similar.

Diagnostic LED (yellow):

LED on with: optical sensor path faulty (code error, LED error low voltage and over-temperature

Interface Characteristics CANopen:

Singleturn resolution (maximum, scalable):	1-65536 (16 bits), default scale value is set to 8192 (13 bits)
Code:	Binary
Interface:	CAN High-Speed according ISO 11898, Basic and Full CANCAN Specification 2.0 B
Protocol:	CANopen profile DS 406 V3.2 with manufacturer-specific add-ons
Baud rate:	10-1000 kbits/s (set by DIP switches/software configurable)
Node address:	1-127 (set by rotary switches/software configurable)
Termination switchable:	Set by DIP switches, software configurable

General Information about CANopen

The RS-25/33 series of encoders support the latest CANopen communication profile according to DS 301 V4.02. In addition, device-specific profiles are available, such as DS 406 V3.2.

The following operating modes may be selected: Polled Mode, Cyclic Mode, Sync Mode. Moreover, scale factors, preset values, limit switch values and many other additional parameters may be programmed via the CANopen fieldbus. When switching the device on, all parameters, which have been saved on a flash memory to protect them against power failure, are loaded again.

Position, speed, acceleration and status output values may be combined in a freely variable way as PDO mapping.

The encoders are available with a connector or a cable connection. The device address and baud rate can be set or modified by means of the software. Models with a bus terminal cover and integrated T-shaped coupler allow a particularly easy installation via M12 connectors. The device address is set by means of two hexadecimal rotary switches. Furthermore, another DIP switch allows setting the baud rate and switching on a termination resistor. Three LEDs indicate the operating or fault status of the CANopen fieldbus, as well as the status of internal diagnostics.

CANopen Communication Profile DS 301 V4.02

The following Class C2 functionality is integrated:

- NMT Slave
- Heartbeat Protocol
- High Resolution Sync Protocol Identity Object
- Error Behavior Object
- Variable PDO Mapping self-start programmable (power on to operational), 3 Sending PDO's
- One receiving PDO for servo preset operation with minimal jitter
- Node address, baud rate and CANbus
- Programmable termination

CANopen Encoder Profile DS 406 V3.2

The following parameters may be programmed:

- Event mode
- Units for speed selectable (Steps/Sec or RPM)
- Factor for speed calculation (e.g. measuring wheel periphery), integration time for speed value of 1 to 32
- Two work areas with two upper and lower limits and the corresponding output states
- Variable PDO mapping for position, speed, acceleration and work area status
- Extended failure management for position sensing with integrated temperature control
- User interface with visual display of bus and failure status – 3 LEDs
- Optional – 32 CAMs programmable
- Customer-specific memory – 16 bytes

Key features:

The object 6003h "Preset" is assigned to an integrated key, accessible from the outside .
"Watchdog-controlled" device

We reserve the right to make technical alterations without prior notice.

Absolute, Singleturn Type RS-25 (Shaft) / RS-33 (Blind Hollow Shaft) CANopen

Standard Wiring:
Bus Terminal Cover with Terminal Box (Connection RC)

Direction	OUT					IN				
Signal:	CAN Ground	CAN_Low (-)	CAN_High (+)	Common (0 V) power supply	+V power supply	Common (0 V) power supply	+V power supply	CAN_Low (-)	CAN_High (+)	CAN Ground
Abbrv:	CG	CL	CH	0 V	+V	0 V	+V	CL	CH	CG

Standard Wiring:
Cable Connection (Connection BC)

Direction	IN				
Signal:	Common (0 V) power supply	+V power supply	CAN_Low (-)	CAN_High (+)	CAN Ground
Abbrv:	0 V	+V	CL	CH	CG
Color:	WH	BN	YE	GN	GY

Standard Wiring:
M23 Connector (Connection B1M23) or M12 Connector (Connection B1M12)

Direction	IN					Pinout
Signal:	Common (0 V) power supply	+V power supply	CAN_Low (-)	CAN_High (+)	CAN Ground	
Abbrv:	0 V	+V	CL	CH	CG	
M23 pin:	10	12	2	7	3	A
M12 pin:	3	2	5	4	1	C

Standard Wiring:
Bus Terminal Cover with 2 - M12, 2 - M12, 2 - M23 (Connection R2M12) (Connection B2M12) (Connection B2M23)

Direction	OUT					Pinout	IN					Pinout
Signal:	CAN Ground	CAN_Low (-)	CAN_High (+)	0 V power supply	+V power supply		0 V power supply	+V power supply	CAN_Low (-)	CAN_High (+)	CAN Ground	
Abbrv:	CG	CL	CH	0 V	+V		0 V	+V	CL	CH	CG	
M23 pin:	3	2	7	10	12	A	10	12	2	7	3	A
M12 pin:	1	5	4	3	2	B	3	2	5	4	1	C

Wiring Diagrams:

A	B	C
Male Encoder View	**Female Encoder View**	**Male Encoder View**
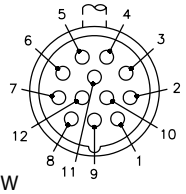 CCW	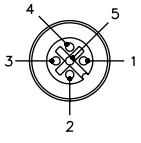	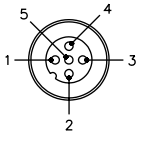
Bus In and Out M23 Multifast Pinout	**Bus Out** M12 Eurofast Pinout	**Bus In** M12 Eurofast Pinout
Mating Cordset: [1] Consult factory	Mating Cordset: [1] **RSC 572-*/S3118**	Mating Cordset: [1] **RKC 572-*/S3117**

[1] See Connectivity section H for mating cordset color codes.
* Length in meters. Available in 0.1 meters increments ≥0.2 meters.

We reserve the right to make technical alterations without prior notice.

Absolute, Singleturn Type RS-25 (Shaft) / RS-33 (Blind Hollow Shaft) CANopen

Part Number Key: RS-25 Shaft Version

A	B	C		D		E		F
RS-25S	6	C	-	9D16B	-	B1M12	/	N46

A	Type
RS-25S	Ø 58 mm, Shaft, IP67 Shaft Seal
RS-25T	Ø 58 mm, Shaft, IP65 Shaft Seal

B	Shaft (Ø x L)
6	Ø 6 mm x 10 mm
10	Ø 10 mm x 20 mm
A0	Ø 1/4'' x 7/8''
A1	Ø 3/8'' x 7/8''

C	Flange
C	Ø 58 mm Clamping Flange
S	Ø 58 mm Servo Flange
R	2.5" Square Flange

D	Power Supply and Output Type
9D16B	10-30 VDC, CANopen DS 301 V4.02

E	Type of Connection
B1M12	Radial 1 x M12 Eurofast Connector w/o Bus Terminal Cover
B2M12	Radial 2 x M12 Eurofast Connectors w/o Bus Terminal Cover
R2M12	Radial 2 x M12 Eurofast Connectors w/ Bus Terminal Cover
B1M23	Radial 1 x M23 Multifast Connector w/o Bus Terminal Cover
B2M23	Radial 2 x M23 Multifast Connectors w/o Bus Terminal Cover
BC	Radial Cable (2 m PVC) w/o Bus Terminal Cover
RC	Radial Cable Gland w/ Bus Terminal Cover

F	Options
(BLANK)	No Options
N46	SET

Part Number Key: RS-33 Blind Hollow Shaft Version

A	B	C		D		E		F
RS-33B	10	E	-	9D16B	-	B1M12	/	N46

A	Type
RS-33B	Ø 58 mm, Blind Hollow Shaft, IP67 Shaft Seal
RS-33C	Ø 58 mm, Blind Hollow Shaft, IP65 Shaft Seal

B	Bore (30 mm Insertion Depth)
10	Ø 10 mm
12	Ø 12 mm
14	Ø 14 mm
15	Ø 15 mm
A1	Ø 3/8''
A3	Ø 1/2''

C	Flange
E	Flange w/ Ø 63 mm Slotted Flex Mount
E1	Flange w/ Ø 65 mm Flex Mount
T	Flange w/ Torque Stop

D	Power Supply and Output Type
9D16B	10-30 VDC, CANopen DS 301 V4.02

E	Type of Connection
B1M12	Radial 1 x M12 Eurofast Connector w/o Bus Terminal Cover
B2M12	Radial 2 x M12 Eurofast Connectors w/o Bus Terminal Cover
R2M12	Radial 2 x M12 Eurofast Connectors w/ Bus Terminal Cover
B1M23	Radial 1 x M23 Multifast Connector w/o Bus Terminal Cover
B2M23	Radial 2 x M23 Multifast Connectors w/o Bus Terminal Cover
BC	Radial Cable (2 m PVC) w/o Bus Terminal Cover
RC	Radial Cable Gland w/ Bus Terminal Cover

F	Options
(BLANK)	No Options
N46	SET

Accessories:

- See page H1, Connectivity, for cables and connectors
- See page G1, Accessories, for mounting attachments and couplings

We reserve the right to make technical alterations without prior notice.

Absolute, Singleturn Type RS-25 (Shaft) / RS-33 (Blind Hollow Shaft) CANopen

Dimensions: RS-25 Shaft Version

RS-25 Flange S
Connection RC

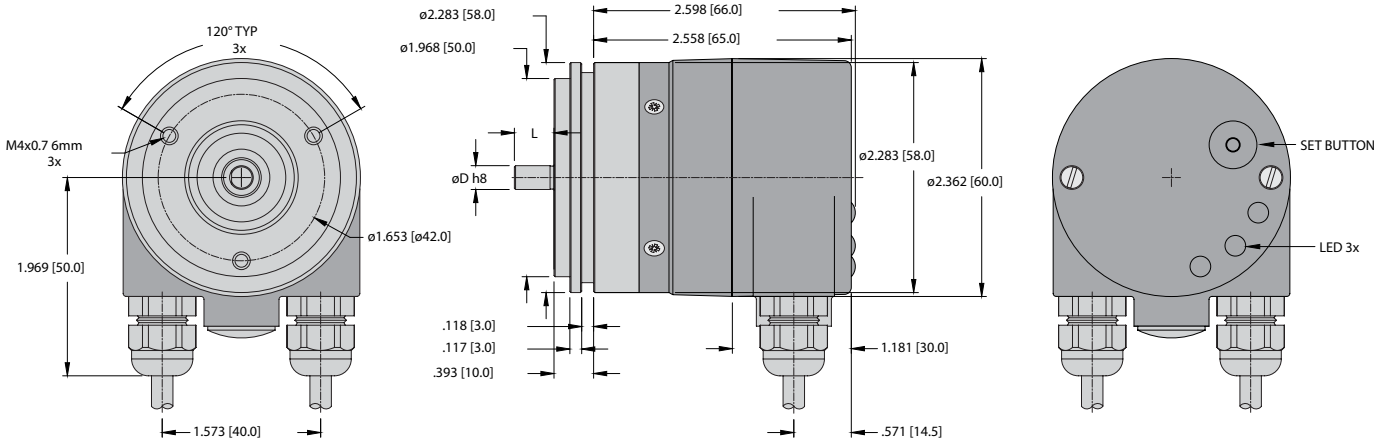

RS-25 Flanges C
Connection R2M12

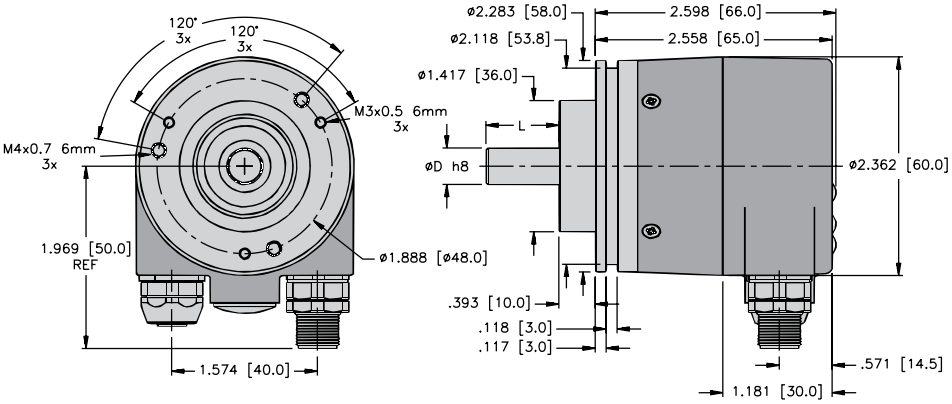

RS-25 Flange C
Connection BC

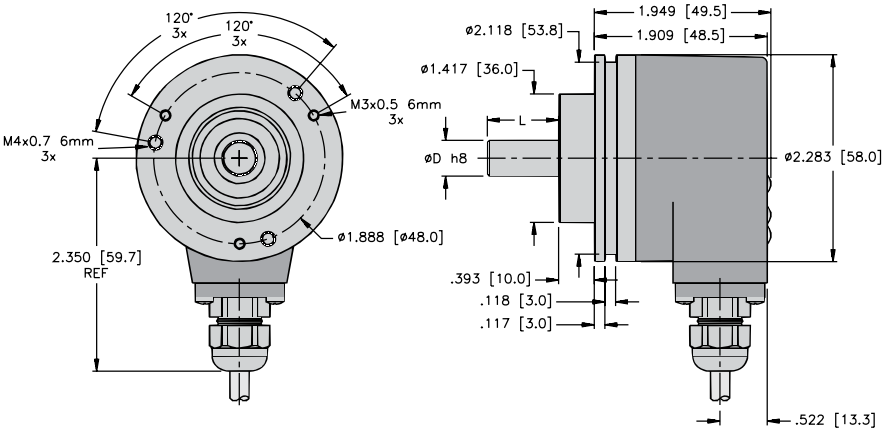

We reserve the right to make technical alterations without prior notice.

Turck Inc. | 3000 Campus Drive, Minneapolis, MN 55441 | T +1 800 544 7769 | F +1 763 553 0708 | www.turck.com

Absolute, Singleturn Type RS-25 (Shaft) / RS-33 (Blind Hollow Shaft) CANopen

Dimensions: RS-25 Shaft Version

RS-25 Flange C
Connection B1M12

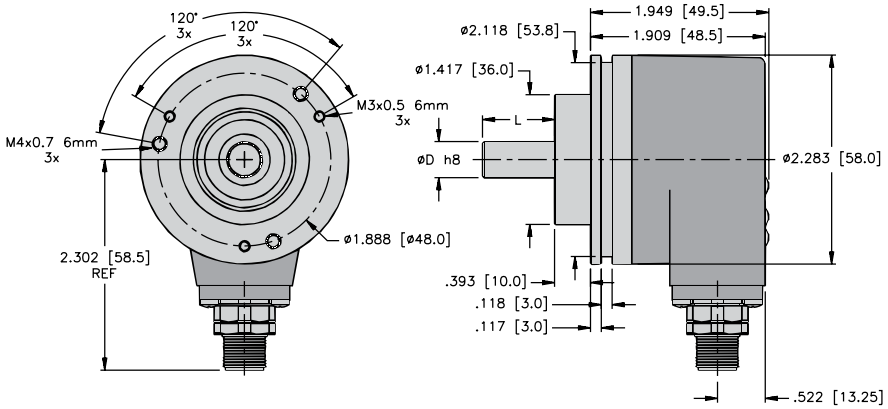

RS-25 Flange C
Connection B2M12

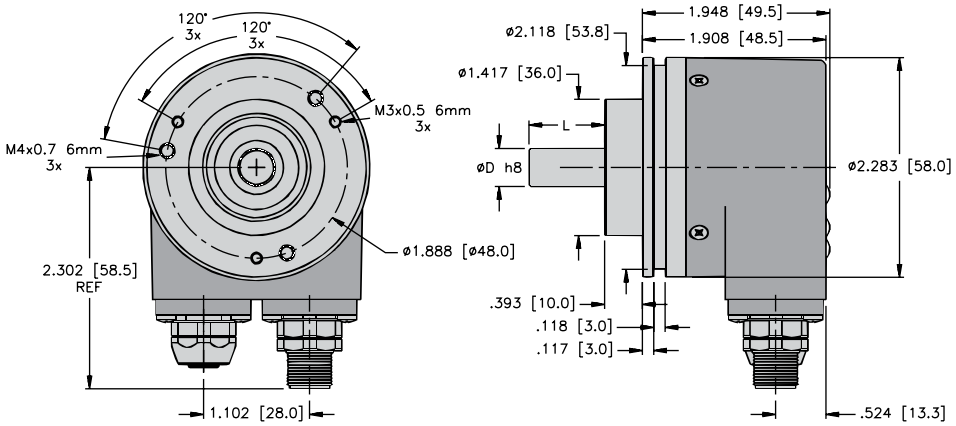

RS-25 Flange S
Connection B1M23

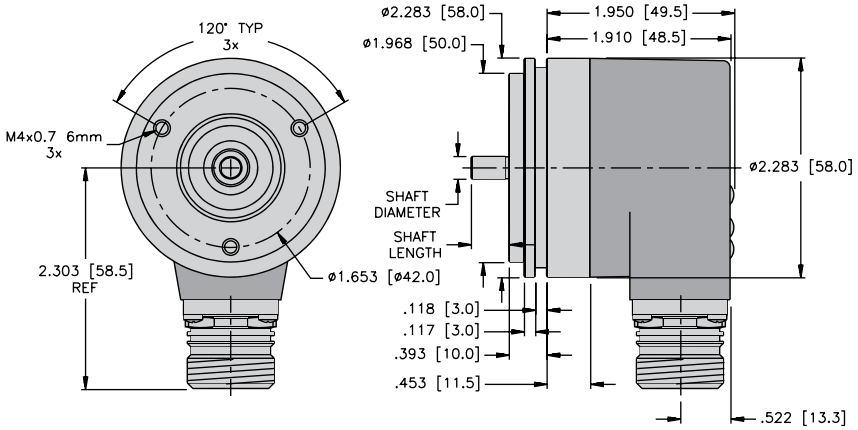

We reserve the right to make technical alterations without prior notice.

Absolute, Singleturn Type RS-25 (Shaft) / RS-33 (Blind Hollow Shaft) CANopen

Dimensions: RS-25 Shaft Version

RS-25 Flange R
Connection B2M23

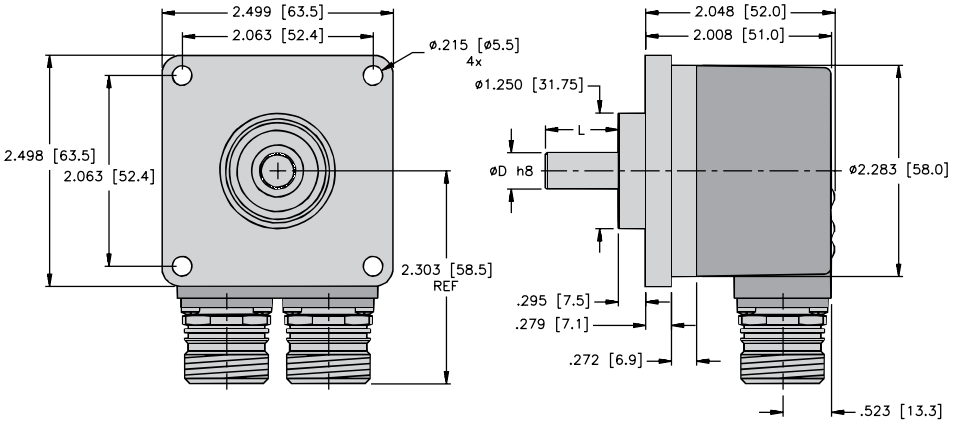

We reserve the right to make technical alterations without prior notice.

Absolute, Singleturn Type RS-25 (Shaft) / RS-33 (Blind Hollow Shaft) CANopen

Dimensions: RS-33 Blind Hollow Shaft Version

RS-33 Flange E
Connection RC

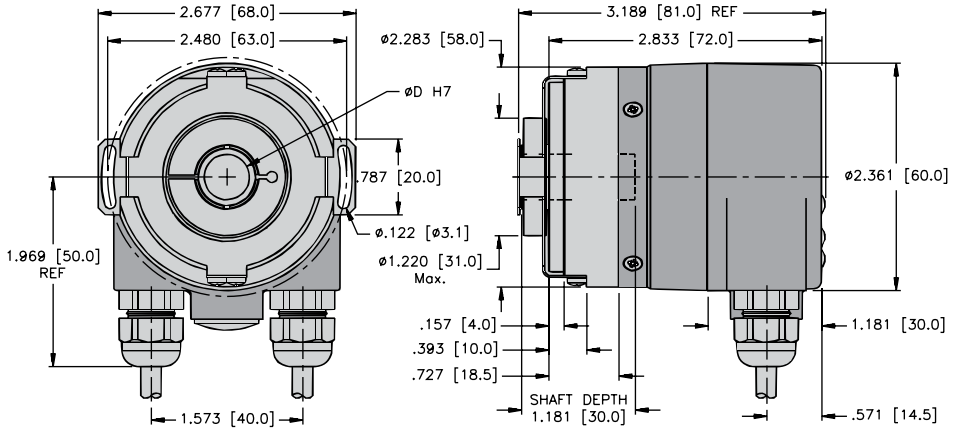

RS-33 Flange E1
Connection R2M12

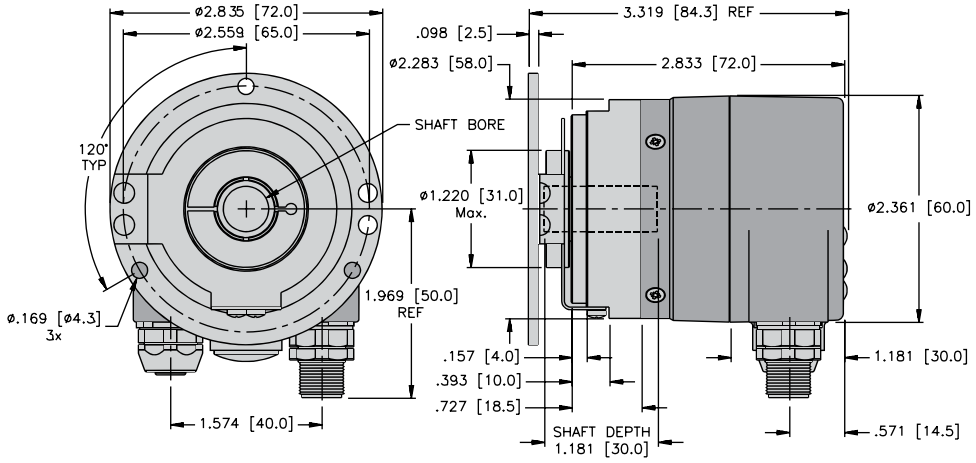

RS-33 Flange T
Connection R2M12

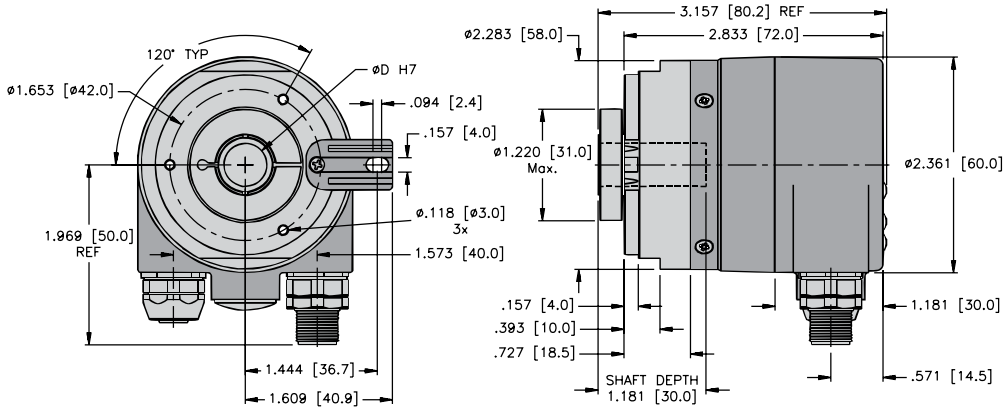

We reserve the right to make technical alterations without prior notice.

Absolute, Singleturn Type RS-25 (Shaft) / RS-33 (Blind Hollow Shaft) CANopen

Dimensions: RS-33 Blind Hollow Shaft Version

RS-33 Flange E1
Connection BC

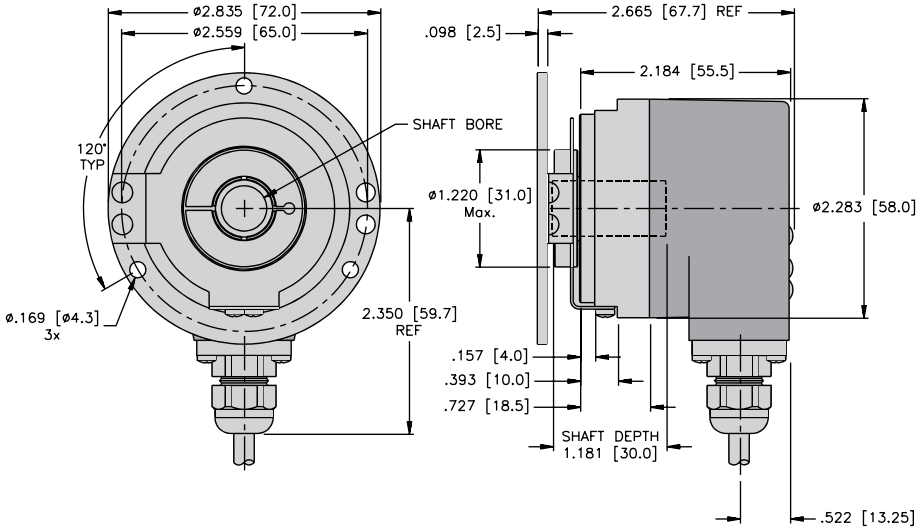

RS-33 Flange E
Connection B1M12

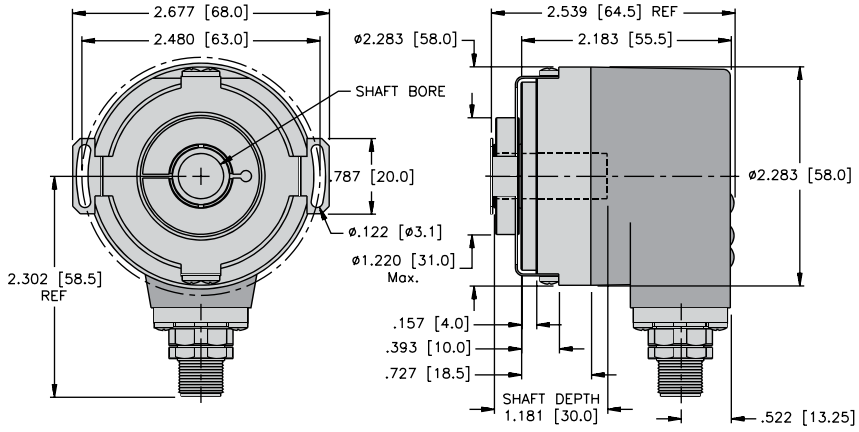

RS-33 Flange T
Connection B2M12

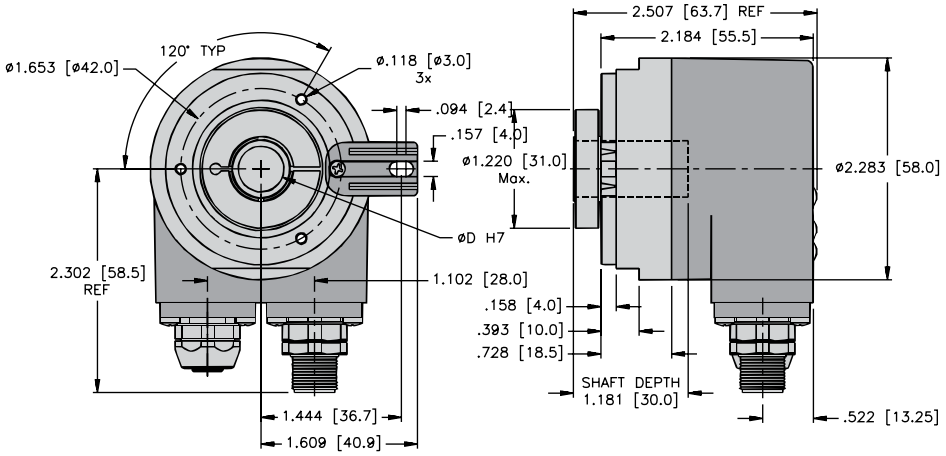

We reserve the right to make technical alterations without prior notice.

Turck Inc. | 3000 Campus Drive, Minneapolis, MN 55441 | T +1 800 544 7769 | F +1 763 553 0708 | www.turck.com

Absolute, Singleturn Type RS-25 (Shaft) / RS-33 (Blind Hollow Shaft) CANopen

Dimensions: RS-33 Blind Hollow Shaft Version

RS-33 Flange T
Connection B1M23

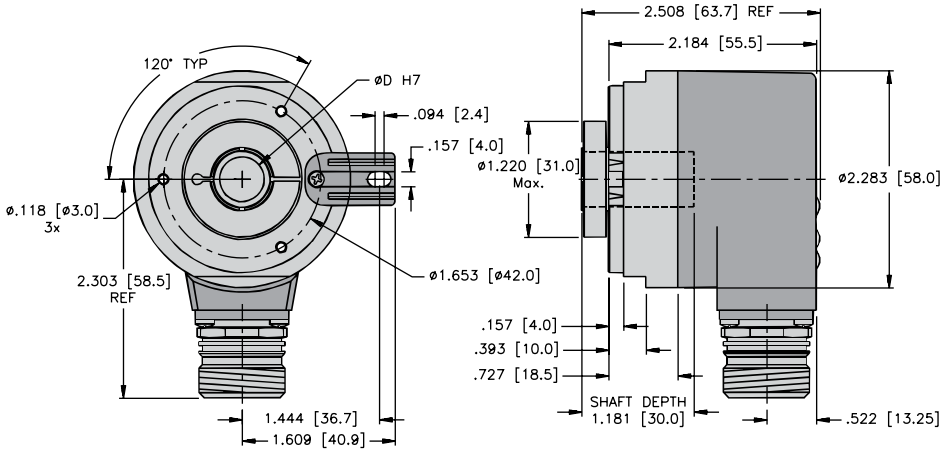

RS-33 Flange E1
Connection B2M23

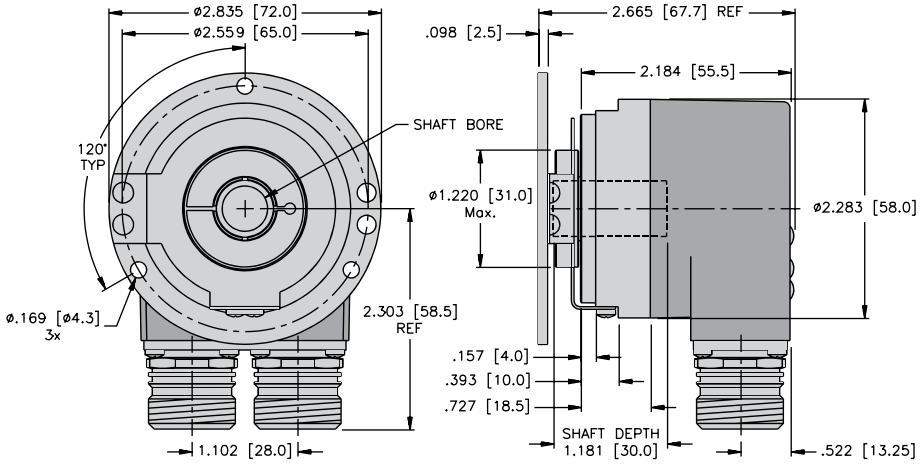

We reserve the right to make technical alterations without prior notice.

Absolute, Singleturn Type RS-25 (Shaft) / RS-33 (Blind Hollow Shaft) EtherCAT



Bearing-Lock | High rotational speed | Temperature | High IP | High shaft load capacity | Shock/vibration resistant | Magnetic field proof | Short-circuit protected | Reverse polarity protection | Optical sensor | Seawater-resistant version on request

Reliable

- **Increased ability to withstand vibration and installation errors.** Sturdy Bearing-Lock design structure **eliminates machine downtime and repairs.**
- **Fewer components and connection points increase the operational reliability.** Turck OptoASIC technology with highest integration density (Chip-on-Board).
- Die cast housing and protection up to IP67: **Remains sealed even when subjected to harsh everyday use.**
- Wide temperature range of: -40 to +176 °F (-40 to +80 °C).



Absolute

EtherCAT

Fast

- **Genuine time-servo position detection of several axes:** Distributed clock for real-time position detection.
- **Fast data availability with reduced loading on the bus and controller:** Intelligent functions such as transmission of speed/velocity, acceleration or leaving a working area.
- **Fast, simple, error-free connection:** Bus terminal cover with 3 x M12 connectors.

Versatile

- **Up-to-the minute fieldbus performance in the CoE application.**
- Real-time data access including **position, speed/velocity, acceleration or working area:** PDO mapping in the memory.
- **Fast, error-free start-up without setting switches.** All parameters can be programmed via the bus.
- **Numerous special functions:** Temperature monitoring, operating time, customer data (e.g., installation location)

Mechanical Characteristics:

Max. speed without shaft sealing (IP65) up to 158 °F (70 °C): Max. speed without shaft sealing (IP65) up to Tmax: Max. speed with shaft sealing (IP67) up to 158 °F (70 °C): Max. speed with shaft sealing (IP67) up to Tmax:	9,000 RPM, continuous 7,000 RPM 7,000 RPM, continuous 4,000 RPM 8,000 RPM, continuous 6,000 RPM 6,000 RPM, continuous 3,000 RPM
Starting torque without shaft sealing (IP65):	< 1.4 oz-in (< 0.01 Nm)
Starting torque with shaft sealing (IP67):	Shaft version: < 7 oz-in (< 0.05 Nm) Hollow shaft version: < 4.25 oz-in (<0.03 Nm)
Moment of inertia:	Shaft version: 0.16 oz-in^2 (3.0 x 10^{-6} kgm^2) Hollow shaft version: 0.328 oz-in^2 (6.0 x 10^{-6} kgm^2)
Radial load capacity of shaft:	18 lbs (80 N)
Axial load capacity of shaft:	9 lbs (40 N)
Weight:	approx. 1.10 lbs (0.50 kg)
Protection acc. to EN 60 529:	Housing: IP67, Shaft: IP65, opt. IP67
Working temperature:	-40 to +176 °F (-40 to +80 °C)
Materials:	Shaft/hollow shaft: stainless steel, Flange: aluminum, Housing: die cast zinc
Shock resistance acc. to DIN-IEC 68-2-27:	> 250 g (> 2,500 m/s^2), 6 ms
Vibration resistance acc. to DIN-IEC 68-2-6:	> 10 g (> 100 m/s^2), 55-2,000 Hz

We reserve the right to make technical alterations without prior notice.

Turck Inc. | 3000 Campus Drive, Minneapolis, MN 55441 | T +1 800 544 7769 | F +1 763 553 0708 | www.turck.com

Absolute, Singleturn Type RS-25 (Shaft) / RS-33 (Blind Hollow Shaft) EtherCAT

General Electrical Characteristics:

Supply voltage:	10-30 VDC
Current consumption (without output load):	Max. 110 mA
Reverse polarity protection at power supply (+V):	Yes
RoHS compliant according to EU guideline 2011/65/EU	
UL approval:	file E356899

Device Characteristics:

Singleturn resolution:	1-65535 (16 bit), (scalable: 1-65535)
Default value:	8192 (13 bit)
Total resolution:	scalable from 1 to 65535 (16 bit)
Interface:	Binary
Protocol:	EtherNet/EtherCAT

Diagnostic LED (Red):

LED is ON with the following fault conditions:
Sensor error (internal code or LED error), low voltage, over-temperature

Run LED (Green):

LED is ON with the following conditions:
Preop-, Safeop and Op-State (EtherCat status machine)

2 x Link LED (Yellow):

LED is ON with the following conditions (Port A and B)
Link detected

Modes:

Freerun, Distributed Clock (cycle time for Sync 0 pulse min. 125 µs or 62.5 µs with restrictions), Sync-Mode

General Information about CoE (CAN over EtherCAT)

The RS-25/33 series of EtherCAT encoders support the CANopen communication profile according to DS 301. In addition, device-specific profiles are available.

Scaling, preset values, limit switch values and many other parameters can be programmed via the EtherCAT bus. When switching the device on, all parameters, which have been saved on a flash memory to protect them against power failure, are loaded again.

Position, speed, acceleration and status output values may be combined in a freely variable way as PDO mapping.

CANopen Encoder Profile CoE (CAN over EtherCAT)

The following parameters are programmable:

- Units for speed selectable (Steps/Sec or RPM)
- Factor for speed calculation (e.g., circumference of measuring wheel)
- Integration time for the speed value from 1 to 32
- Two working areas with two upper and lower limits and the corresponding output states
- PDO mapping of position, speed/velocity, acceleration and working area
- Extended error management for position sensing with integrated temperature control
- User interface with visual display of bus and fault status – 4 LEDs
- Alarm and warning messages

Standard Wiring (Bus): (M12 Connection R3M12, D-coded)

Direction:	Port A				Port B			
Signal:	Transmit data+	Receive data+	Transmit data-	Receive data-	Transmit data+	Receive data+	Transmit data-	Receive data-
Abbrv:	TxD+	RxD+	TxD-	RxD-	TxD+	RxD+	TxD-	RxD-
M12 pin:	1	2	3	4	1	2	3	4

Standard Wiring (Power Supply): M12 Connector

Signal:	Power supply	N/C	Common	N/C
Abbrv:	+V	-	0 V	-
M12 pin:	1	2	3	4

Wiring Diagrams:

Bus	Power Supply
Female Encoder View	Male Encoder View
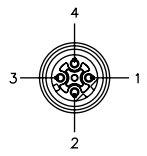	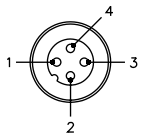
M12 Eurofast Pinout	M12 Eurofast Pinout
Mating Cordset: **RSSD 441-***	Mating Cordset: **RK 4.4T-***

We reserve the right to make technical alterations without prior notice.

Absolute, Singleturn Type RS-25 (Shaft) / RS-33 (Blind Hollow Shaft) EtherCAT

Part Number Key: RS-25 Shaft Version

A	B	C		D		E
RS-25S	6	C	-	9C16B	-	R3M12

A	Type
RS-25S	Ø 58 mm, Shaft, IP67 Shaft Seal
RS-25T	Ø 58 mm, Shaft, IP65 Shaft Seal

B	Shaft (Ø x L)
6	Ø 6 mm x 10 mm
10	Ø 10 mm x 20 mm
A0	Ø 1/4" x 7/8"
A1	Ø 3/8" x 7/8"

C	Flange
C	Ø 58 mm Clamping Flange
S	Ø 58 mm Servo Flange
R	2.5" Square Flange

D	Power Supply and Output Type
9C16B	10-30 VDC, EtherCAT

E	Type of Connection
R3M12	Radial 3 x M12 Eurofast Connectors w/ Bus Terminal Cover

Part Number Key: RS-33 Blind Hollow Shaft Version

A	B	C		D		E
RS-33B	10	E	-	9C16B	-	R3M12

A	Type
RS-33B	Ø 58 mm, Blind Hollow Shaft, IP67 Shaft Seal
RS-33C	Ø 58 mm, Blind Hollow Shaft, IP65 Shaft Seal

B	Bore (30 mm Insertion Depth)
10	Ø 10 mm
12	Ø 12 mm
14	Ø 14 mm
15	Ø 15 mm
A1	Ø 3/8"
A3	Ø 1/2"

C	Flange
E	Flange w/ Ø 63mm Slotted Flex Mount
E1	Flange w/ Ø 65mm Flex Mount
T	Flange w/ Torque Stop

D	Power Supply and Output Type
9C16B	10-30 VDC, EtherCAT

E	Type of Connection
R3M12	Radial 3 x M12 Eurofast Connectors w/ Bus Terminal Cover

We reserve the right to make technical alterations without prior notice.

Accessories:

- See page H1, Connectivity, for cables and connectors
- See page G1, Accessories, for mounting attachments and couplings

Absolute, Singleturn Type RS-25 (Shaft) / RS-33 (Blind Hollow Shaft) EtherCAT

Dimensions: RS-25 Shaft Version

RS-25 Flange S
Connection R3M12

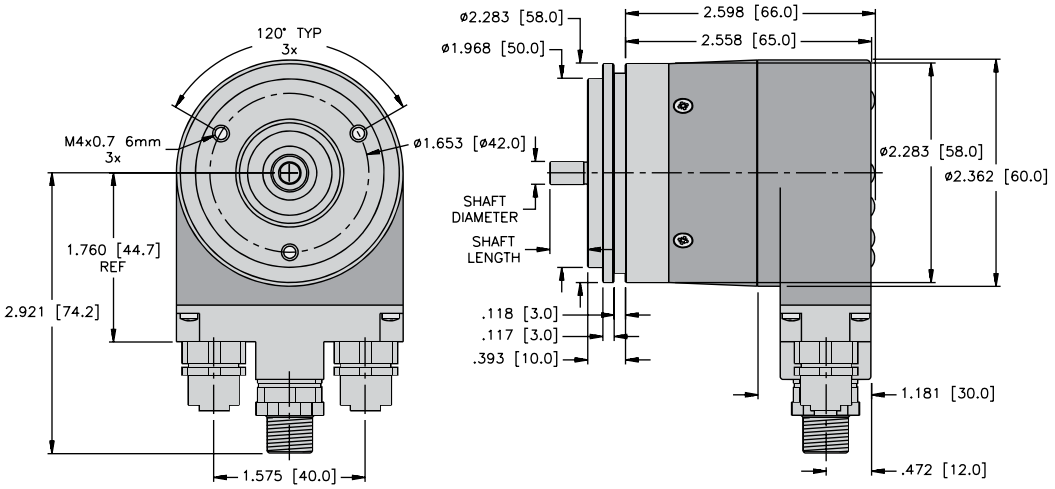

RS-25 Flange C
Connection R3M12

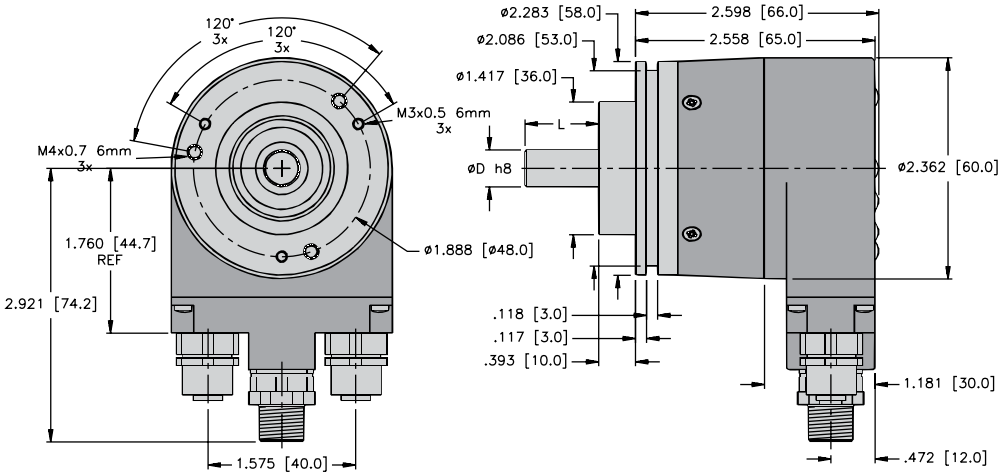

RS-25 Flange R
Connection R3M12

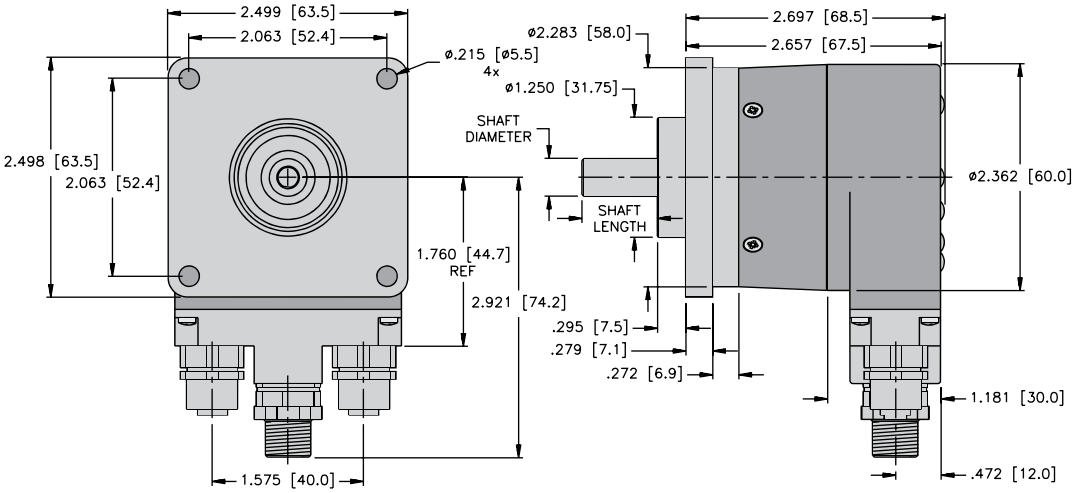

We reserve the right to make technical alterations without prior notice.

Absolute, Singleturn Type RS-25 (Shaft) / RS-33 (Blind Hollow Shaft) EtherCAT

Dimensions: RS-33 Blind Hollow Shaft Version

RS-33 Flanges T
Connection R3M12

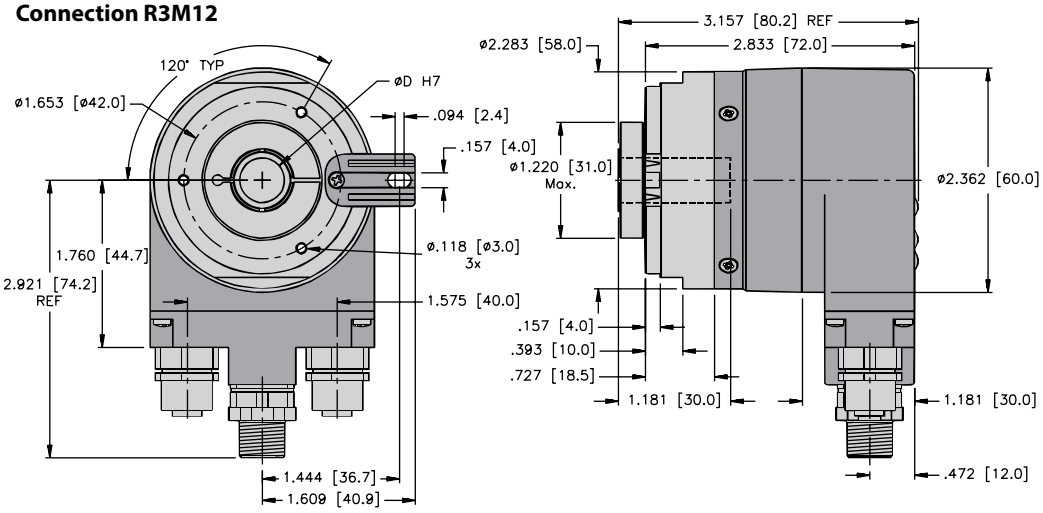

RS-33 Flange E
Connection R3M12

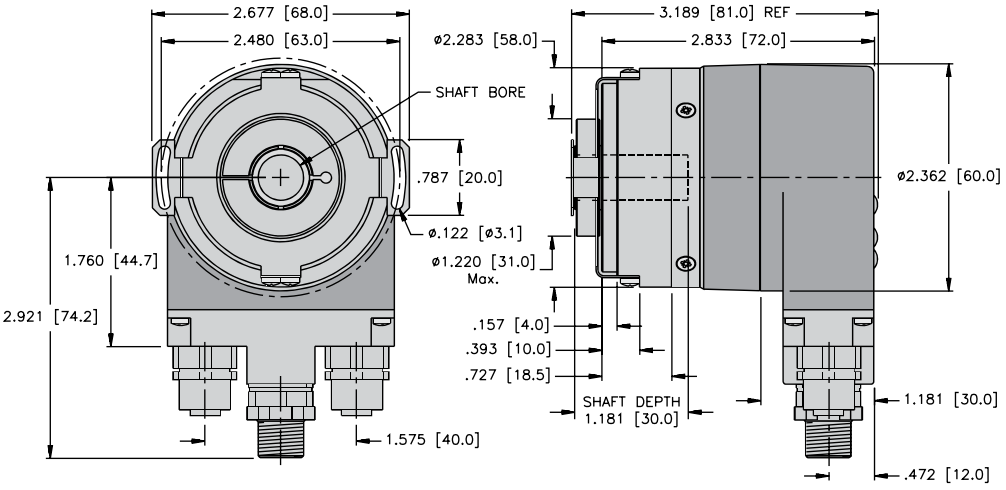

RS-33 Flange E1
Connection R3M12

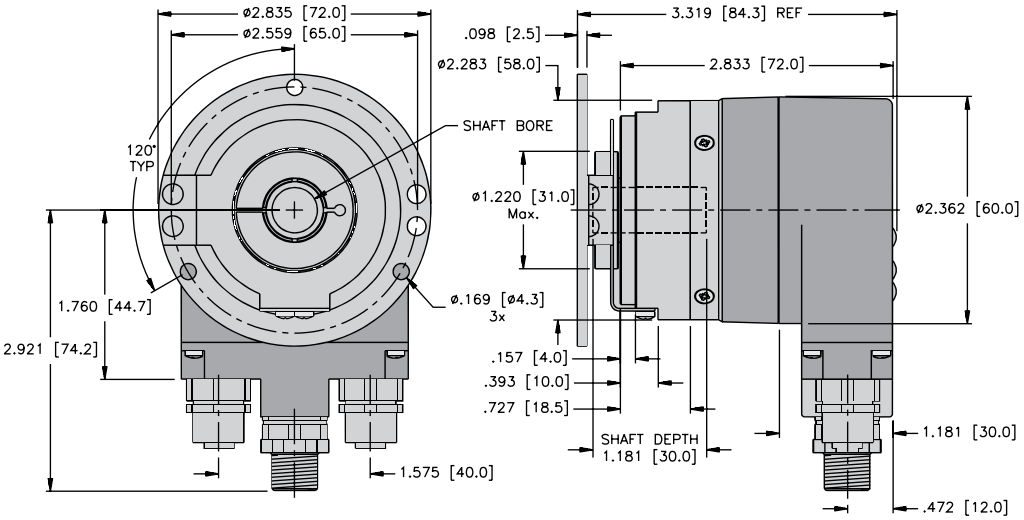

We reserve the right to make technical alterations without prior notice.

Absolute, Singleturn Type RS-25 (Shaft) / RS-33 (Blind Hollow Shaft) PROFIBUS-DP

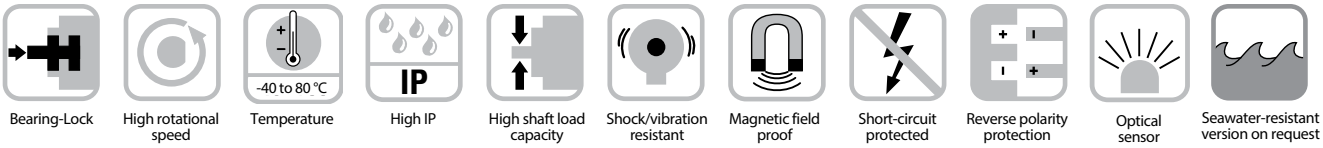

Bearing-Lock | High rotational speed | Temperature | High IP | High shaft load capacity | Shock/vibration resistant | Magnetic field proof | Short-circuit protected | Reverse polarity protection | Optical sensor | Seawater-resistant version on request

Reliable

- **Increased ability to withstand vibration and installation errors.** Sturdy Bearing-Lock design bearing structure **eliminates machine downtime and repairs.**
- **Fewer components and connection points increase the operational reliability.** Turck OptoASIC technology with highest integration density (Chip-on-Board).
- Die cast housing and protection up to IP67: **Remains sealed even when subjected to harsh everyday use.**
- Wide temperature range.



Absolute

Fast

- **Fast data availability with reduced loading on the bus and controller:** Intelligent functions such as transmission of speed/velocity, acceleration or leaving a working area.
- **Fast, simple, error-free connection.**

Versatile

- **Up-to-the minute fieldbus performance:** PROFIBUS-DP V0 with the current encoder profile supports Class I and Class II.
- **Connection options:** Bus cover with M12 connector or cable connection.
- **Fast start-up:** with pre-defined GSD file. A variety of scaling options for the most diverse applications: 16 bit singleturn resolution; comprehensive diagnostics, programmable to Class II.

Mechanical Characteristics:

Max. speed without shaft sealing (IP65) up to 158 °F (70 °C): Max. speed without shaft sealing (IP65) up to Tmax: Max. speed with shaft sealing (IP67) up to 158 °F (70 °C): Max. speed with shaft sealing (IP67) up to Tmax:	9,000 RPM, continuous 7,000 RPM 7,000 RPM, continuous 4,000 RPM 8,000 RPM, continuous 6,000 RPM 6,000 RPM, continuous 3,000 RPM
Starting torque without shaft sealing (IP65):	< 1.4 oz-in (< 0.01 Nm)
Starting torque with shaft sealing (IP67):	Shaft version: < 7 oz-in (0.05 Nm) Hollow shaft version: < 4.25 oz-in (< 0.03 Nm)
Moment of inertia:	Shaft version: 0.16 oz-in^2 (3.0 x 10^{-6} kgm^2) Hollow shaft version: 0.328 oz-in^2 (6.0 x 10^{-6} kgm^2)
Radial load capacity of shaft:	18 lbs (80 N)
Axial load capacity of shaft:	9 lbs (40 N)
Weight:	approx. 1.17 lbs (0.53 kg) with bus terminal cover approx. 1.10 lbs (0.50 kg) with fixed connection
Protection acc. to EN 60 529:	Housing: IP67, Shaft: IP65, opt. IP67
Working temperature:	-40 to +176 °F (-40 to +80 °C)
Materials:	Shaft: stainless steel, Flange: aluminum, Housing: die cast zinc, cable: PVC
Shock resistance acc. to DIN-IEC 68-2-27:	> 250 g (> 2,500 m/s^2), 6 ms
Vibration resistance acc. to DIN-IEC 68-2-6:	> 10 g (> 100 m/s^2), 55-2,000 Hz

General Electrical Characteristics:

Supply voltage:	10-30 VDC
Current consumption (without output load):	Max. 110 mA
Reverse polarity protection at power supply (+V):	Yes
RoHS compliant acc. to EU guideline 2011/65/EU	
UL approval:	file E356899

We reserve the right to make technical alterations without prior notice.

Absolute, Singleturn Type RS-25 (Shaft) / RS-33 (Blind Hollow Shaft) PROFIBUS-DP

Interface Characteristics PROFIBUS-DP:

Singleturn resolution (max, scalable):	1-65536 (16 bits), default scale value is set to 8192 (13 bits)
Code:	Binary
Interface:	Specification according to PROFIBUS-DP 2.0 Standard (DIN 19245 part 3)/RS485 driver galvanically isolated
Protocol:	PROFIBUS Encoder Profile V1.1 Class I and Class II with manufacturer-specific enhancements
Baud rate:	Max. 12 Mbits/s
Node address:	1-127 (set by rotary switches)
Termination switchable:	Set by DIP switches

SET Control Button (zero or defined value, option):

Protected against accidental activation, can only be pushed in with the tip of a ballpoint pen or similar.

Diagnostic LED (yellow):

LED on with:
Sensor error: PROFIBUS error

PROFIBUS Encoder-Profile V1.1

The PROFIBUS-DP device profile describes the functionality of the communication and the user-specific component within the PROFIBUS fieldbus system. For encoders, the encoder profile is definitive. Here the individual objects are defined independent of the manufacturer. Furthermore, the profiles offer space for additional manufacturer-specific functions; this means that PROFIBUS-compliant device systems may be used with the guarantee that they are ready for the future.

The following parameters can be programmed:

- Direction of rotation
- Scaling (number of steps per revolution)
- Preset value
- Diagnostics mode

The following functionality is integrated:

- Galvanic isolation of the bus stage with DC/DC converter
- Line driver according to RS485; max. 12 MB
- Address programmable via DIP switches
- Diagnostics LED
- Full Class I and Class II functionality

Standard Wiring (Connection RC):

Signal:	BUS IN				BUS OUT			
	B	A	Common (0 V)	+V	Common (0 V)	+V	B	A
Pin:	1	2	3	4	5	6	7	8

Standard Wiring (Connection R3M12):

Bus In	Signal:	-	BUS-A	-	BUS-B	Shield
	Pin:	1	2	3	4	5

Power Supply	Signal:	+V	-	Common (0 V)	-
	Pin:	1	2	3	4

Bus Out	Signal:	BUS-VDC [1]	BUS-A	BUS_GND [1]	BUS-B	Shield
	Pin:	1	2	3	4	5

Wiring Diagrams:

Bus In	Power Supply	Bus Out
Male Encoder View	Male Encoder View	Female Encoder View
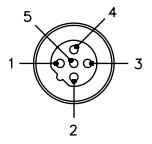	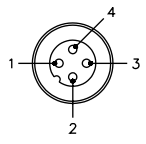	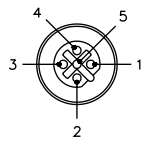
M12 Eurofast Pinout	M12 Eurofast Pinout	M12 Eurofast Pinout
Mating Cordset: [2] [3] **RKSW-590-*M**	Mating Cordset: [2] **RK 4.4T-***	Mating Cordset: [2] [3] **RSSW-590-*M**

[1] For powering an external PROFIBUS-DP terminating resistor.
[2] See Connectivity section H for corresponding cable color code.
[3] "S" denotes shield tied to coupling nut.
* Length in meters. Available in 0.1 meter increments ≥ 0.2 meters.

We reserve the right to make technical alterations without prior notice.

Absolute, Singleturn Type RS-25 (Shaft) / RS-33 (Blind Hollow Shaft) PROFIBUS-DP

Part Number Key: RS-25 Shaft Version

A	B	C		D		E		F
RS-25S	6	C	-	9A16B	-	R3M12	/	N46

A	Type
RS-25S	Ø 58 mm, Shaft, IP67 Shaft Seal
RS-25T	Ø 58 mm, Shaft, IP65 Shaft Seal

B	Shaft (Ø x L)
6	Ø 6 mm x 10 mm
10	Ø 10 mm x 20 mm
A0	Ø 1/4" x 7/8"
A1	Ø 3/8" x 7/8"

C	Flange
C	Ø 58 mm Clamping Flange
S	Ø 58 mm Servo Flange
R	2.5" Square Flange

D	Power Supply and Output Type
9A16B	10-30 VDC, PROFIBUS-DP V0 Encoder Profile V 1.1

E	Type of Connection
R3M12	Radial 3 x M12 Eurofast Connectors w/ Bus Terminal Cover
RC	Radial Cable Gland w/ Bus Terminal Cover

F	Options
(BLANK)	No Options
N46	SET

Part Number Key: RS-33 Blind Hollow Shaft Version

A	B	C		D		E		F
RS-33B	10	E	-	9A16B	-	R3M12	/	N46

A	Type
RS-33B	Ø 58 mm, Blind Hollow Shaft, IP67 Shaft Seal
RS-33C	Ø 58 mm, Blind Hollow Shaft, IP65 Shaft Seal

B	Bore (30 mm Insertion Depth)
10	Ø 10 mm
12	Ø 12 mm
14	Ø 14 mm
15	Ø 15 mm
A1	Ø 3/8"
A3	Ø 1/2"

C	Flange
E	Flange w/ Ø 63 mm Slotted Flex Mount
E1	Flange w/ Ø 65 mm Flex Mount
T	Flange w/ Torque Stop

D	Power Supply and Output Type
9A16B	10-30 VDC, PROFIBUS-DP V0 Encoder Profile V 1.1

E	Type of Connection
R3M12	Radial 3 x M12 Eurofast Connectors w/ Bus Terminal Cover
RC	Radial Cable Gland w/ Bus Terminal Cover

F	Options
(BLANK)	No Options
N46	SET

Accessories:

- See page H1, Connectivity, for cables and connectors
- See page G1, Accessories, for mounting attachments and couplings

We reserve the right to make technical alterations without prior notice.

Absolute, Singleturn T ype RS-25 (Shaft) / RS-33 (Blind Hollow Shaft) PROFIBUS-DP

Dimensions: RS-25 Shaft Version

RS-25 Flange S
Connection RC

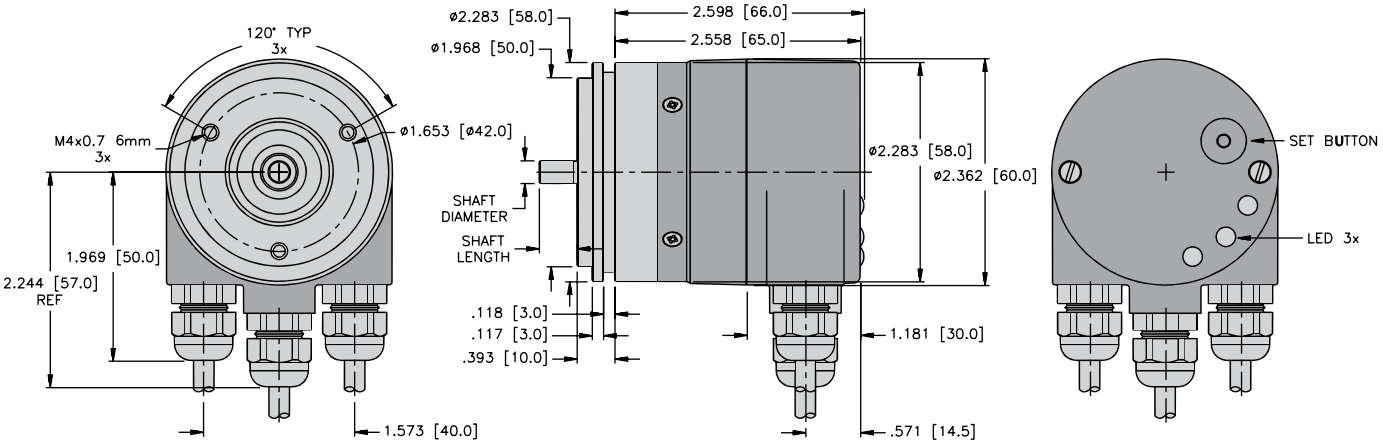

RS-25 Flange R
Connection RC

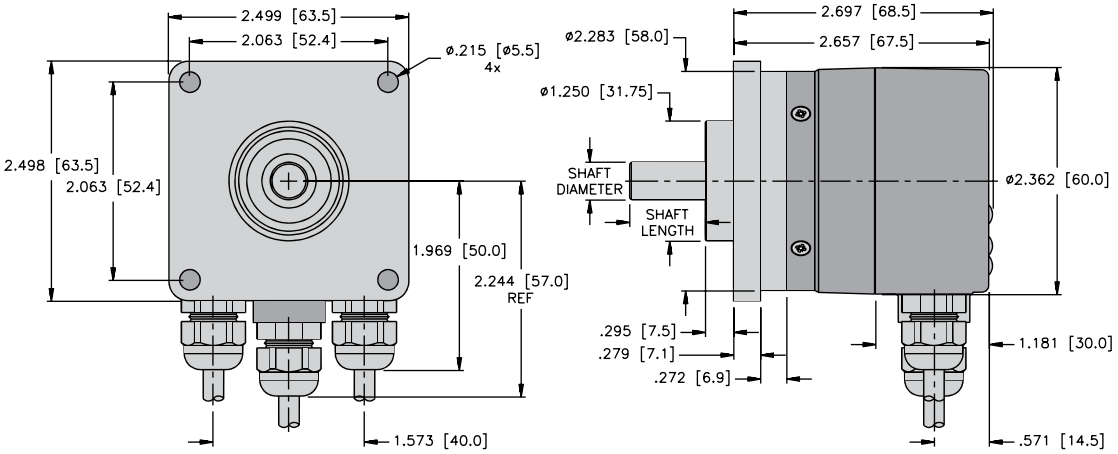

RS-25 Flange C
Connection R3M12

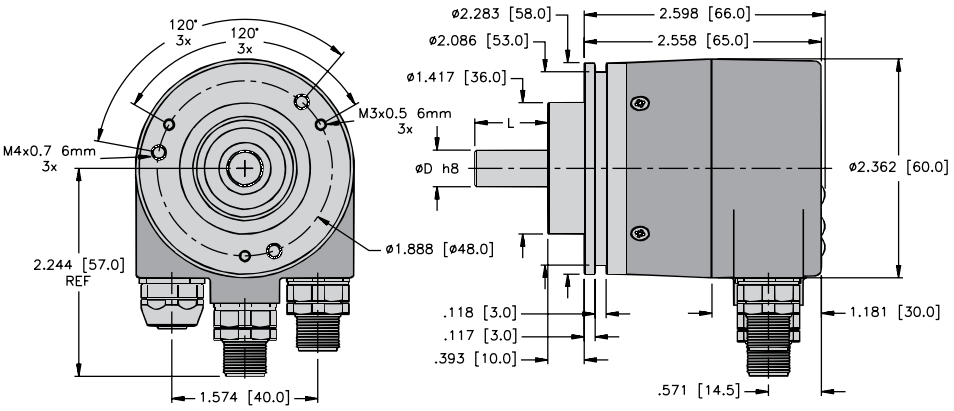

We reserve the right to make technical alterations without prior notice.

Turck Inc. | 3000 Campus Drive, Minneapolis, MN 55441 | T +1 800 544 7769 | F +1 763 553 0708 | www.turck.com

Absolute, Singleturn Type RS-25 (Shaft) / RS-33 (Blind Hollow Shaft) PROFIBUS-DP

Dimensions: RS-33 Blind Hollow Shaft Version

RS-33 Flange E1
Connection R3M12

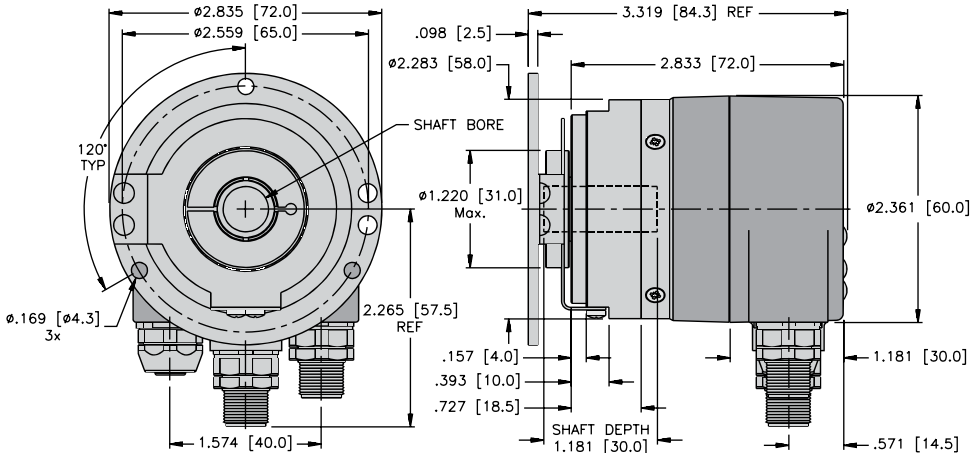

RS-33 Flange E
Connection RC

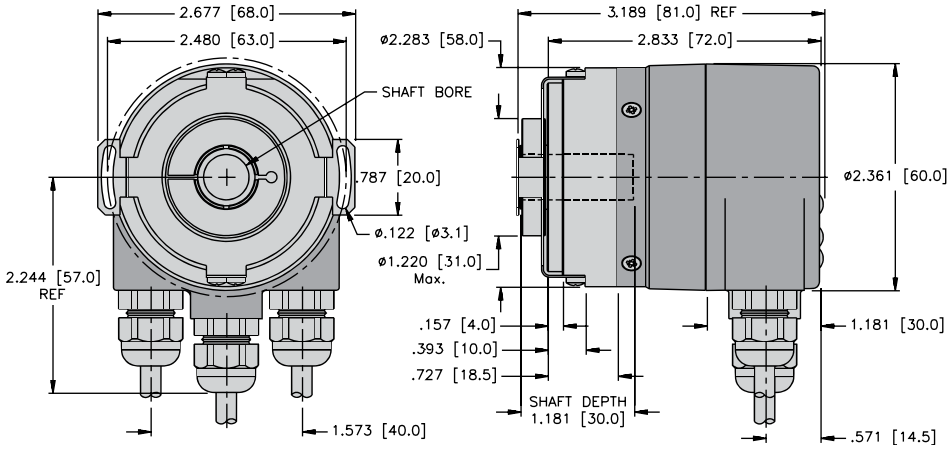

RS-33 Flange T
Connection R3M12

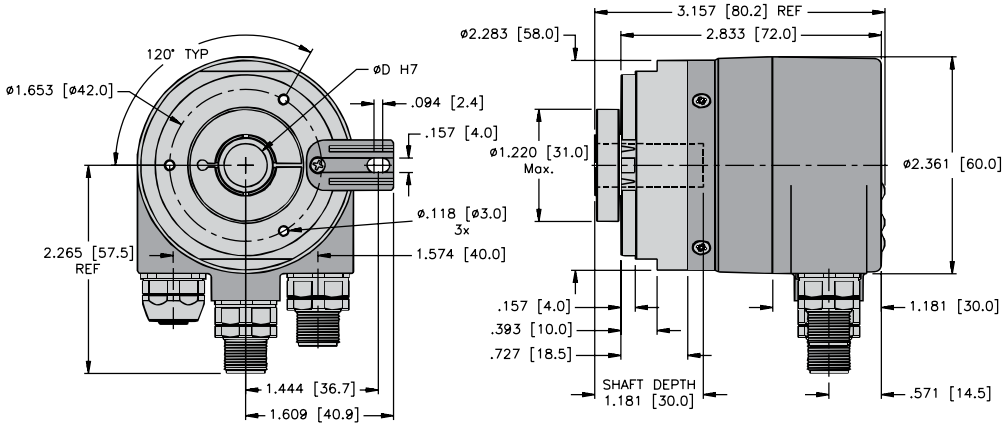

We reserve the right to make technical alterations without prior notice.

Absolute, Singleturn Type RS-25 (Shaft) / RS-33 (Blind Hollow Shaft) PROFINET IO



Bearing-Lock | High rotational speed | Temperature | High IP | High shaft load capacity | Shock/vibration resistant | Magnetic field proof | Short-circuit protected | Reverse polarity protection | Optical sensor | Seawater-resistant version on request

Reliable
- Ideally suited for all PROFINET applications thanks to the use of encoder profile 4.1.
- Perfect for use in harsh outdoor environments, as a result of IP67 protection and rugged housing construction.



Absolute

Fast
- Fast, simple, error-free connection.

Versatile
- IRT-Mode.
- Cycle time ≤ 1 ms.
- Firmware updater allows for easy expansion of characteristics without having to disassemble the encoder.
- M12 connector ensures fast, simple, error-free connection.

Mechanical Characteristics:

Max. speed without shaft sealing (IP65) up to 158 °F (70 °C): Max. speed without shaft sealing (IP65) up to Tmax: Max. speed with shaft sealing (IP67) up to 158 °F (70 °C): Max. speed with shaft sealing (IP67) up to Tmax:	9,000 RPM, continuous 7,000 RPM 7,000 RPM, continuous 4,000 RPM 8,000 RPM, continuous 6,000 RPM 6,000 RPM, continuous 3,000 RPM
Starting torque without shaft sealing (IP65):	< 1.4 oz-in (< 0.01 Nm)
Starting torque with shaft sealing (IP67):	Shaft version: < 7 oz-in (0.05 Nm) Hollow shaft version: < 4.25 oz-in (< 0.03 Nm)
Moment of inertia:	Shaft version: 0.16 oz-in^2 (3.0 x 10^{-6} kgm^2) Hollow shaft version: 0.328 oz-in^2 (6.0 x 10^{-6} kgm^2)
Radial load capacity of shaft:	18 lbs (80 N)
Axial load capacity of shaft:	9 lbs (40 N)
Weight:	approx. 1.10 lbs (0.50 kg) with bus terminal cover
Protection acc. to EN 60 529:	Housing: IP67, Shaft: IP65, opt. IP67
Working temperature:	-40 to +185 °F (-40 to +85 °C)
Materials:	Shaft: stainless steel, Flange: aluminum, Housing: die cast zinc
Shock resistance acc. to DIN-IEC 68-2-27:	> 250 g (> 2,500 m/s^2), 6 ms
Vibration resistance acc. to DIN-IEC 68-2-6:	> 10 g (> 100 m/s^2), 55-2,000 Hz

General Electrical Characteristics:

Supply voltage:	10-30 VDC
Current consumption (without output load):	Max. 200 mA
Reverse polarity protection at power supply (+V):	Yes
RoHS compliant acc. to EU guideline 2011/65/EU	
UL approval:	file E356899

General Information about PROFINET IO

The PROFINET encoder implements the Encoder Profile 4.1. (according to the specification Encoder Version 4.1 Dec 2008).

It permits scaling and preset values, as well as many other additional parameters to be programmed via the PROFINET-Bus.

When switching on, all parameters are loaded from an EEPROM, where they were saved previously to protect them against power-failure, or taken over by the controller in the start-up phase.

Position, speed and many other states of the encoder can be transmitted.

PROFINET IO

The complete encoder profile according toProfile Encoder Version 4.1 as well as the Identification & Maintenance functionality Version 1.16 has been implemented. IM blocks 0, 1, 2, 3 and 4 are supported.

The **Media Redundancy Protocol** is implemented here. Basically, the advantage of MRP is that the functionality of the components, which are wired in a ring structure, is maintained in the case of a failure or breakage of the wires in any location.

We reserve the right to make technical alterations without prior notice.

Turck Inc. | 3000 Campus Drive, Minneapolis, MN 55441 | T +1 800 544 7769 | F +1 763 553 0708 | www.turck.com

Absolute, Singleturn Type RS-25 (Shaft) / RS-33 (Blind Hollow Shaft) PROFINET IO

Device Characteristics:

Singleturn resolution (max, scalable):	1-65536 (16 bits), default scale value is set to 8192 (13 bits)
Code:	Binary
Protocol:	PROFINET IO

Link 1 and 2, LED (green/yellow):

Green:	active
Yellow:	data transfter

Error LED (red) / PWR LED (green):

Functionality (see manual)

Standard Wiring (Bus)(Connection R3M12):

Direction:	Port 1				Port 2			
Signal	Transmit data+	Receive data+	Transmit data-	Receive data-	Transmit data+	Receive data+	Transmit data-	Receive data-
Abbrv.	TxD+	RxD+	TxD-	RxD-	TxD+	RxD+	TxD-	RxD-
Pin:	1	2	3	4	1	2	3	4

Standard Wiring (Power Supply):

Signal	+V power supply	N.C.	Common	N.C.
Abbrv.	+V	-	0 V	-
Pin:	1	2	3	4

Wiring Diagrams:

Bus	Power Supply
Female Encoder View	Male Encoder View
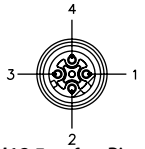	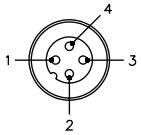
M12 Eurofast Pinout	M12 Eurofast Pinout
Mating Cordset: [1) 2)] **RSSD 420-***	Mating Cordset: [2)] **RK 4.4T-***

[1)] See Connectivity section H for corresponding cable color code.
[2)] "S" denotes shield tied to coupling nut.
* Length in meters. Available in 0.1 meter increments ≥ 0.2 meters.

We reserve the right to make technical alterations without prior notice.

Absolute, Singleturn Type RS-25 (Shaft) / RS-33 (Blind Hollow Shaft) PROFINET IO

Part Number Key: RS-25 Shaft Version

A	B	C		D		E
RS-25S	6	C	-	9E16B	-	R3M12

A	Type
RS-25S	Ø 58 mm, Shaft, IP67 Shaft Seal
RS-25T	Ø 58 mm, Shaft, IP65 Shaft Seal

B	Shaft (Ø x L)
6	Ø 6 mm x 10 mm
10	Ø 10 mm x 20 mm
A0	Ø 1/4" x 7/8"
A1	Ø 3/8" x 7/8"

C	Flange
C	Ø 58 mm Clamping Flange
S	Ø 58 mm Servo Flange
R	2.5" Square Flange

D	Power Supply and Output Type
9E16B	10-30 VDC, PROFINET IO

E	Type of Connection
R3M12	Radial 3 x M12 Eurofast Connectors w/ Bus Terminal Cover

Part Number Key: RS-33 Blind Hollow Shaft Version

A	B	C		D		E
RS-33B	10	E	-	9E16B	-	R3M12

A	Type
RS-33B	Ø 58 mm, Blind Hollow Shaft, IP67 Shaft Seal
RS-33C	Ø 58 mm, Blind Hollow Shaft, IP65 Shaft Seal

B	Bore (30 mm Insertion Depth)
10	Ø 10 mm
12	Ø 12 mm
14	Ø 14 mm
15	Ø 15 mm
A1	Ø 3/8"
A3	Ø 1/2"

C	Flange
E	Flange w/ Ø 63 mm Slotted Flex Mount
E1	Flange w/ Ø 65 mm Flex Mount
T	Flange w/ Torque Stop

D	Power Supply and Output Type
9E16B	10-30 VDC, PROFINET IO

E	Type of Connection
R3M12	Radial 3 x M12 Eurofast Connectors w/ Bus Terminal Cover

We reserve the right to make technical alterations without prior notice.

Accessories:

- See page H1, Connectivity, for cables and connectors
- See page G1, Accessories, for mounting attachments and couplings

Absolute, Singleturn Type RS-25 (Shaft) / RS-33 (Blind Hollow Shaft) PROFINET IO

Dimensions: RS-25 Shaft Version

RS-25 Flange S
Connection R3M12

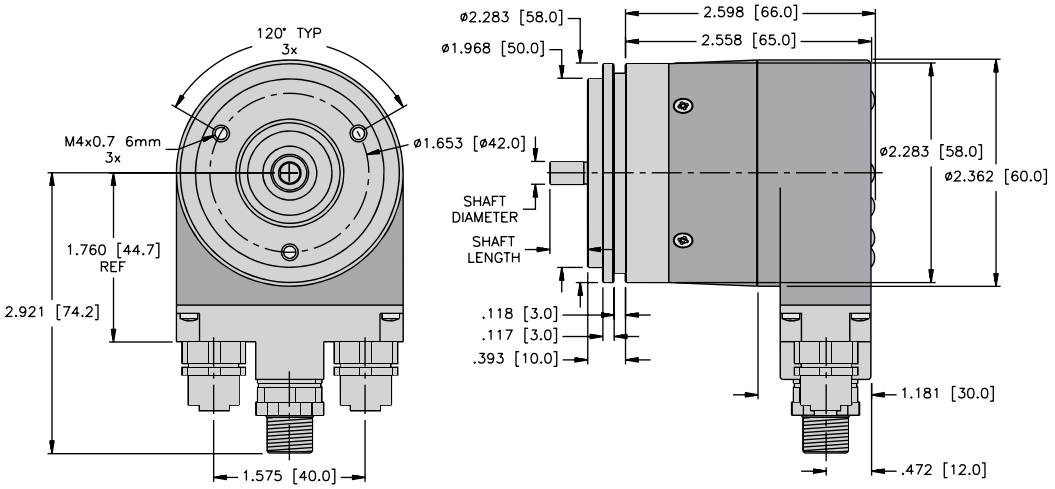

RS-25 Flange C
Connection R3M12

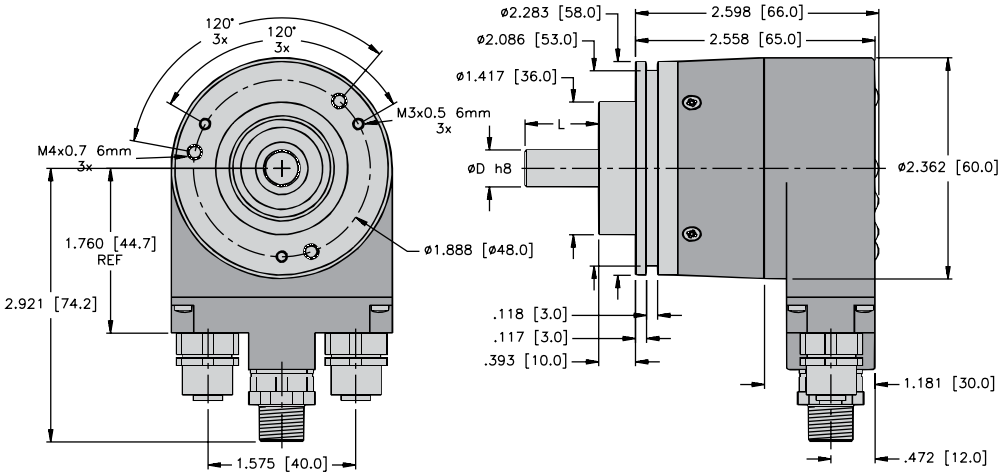

RS-25 Flange R
Connection R3M12

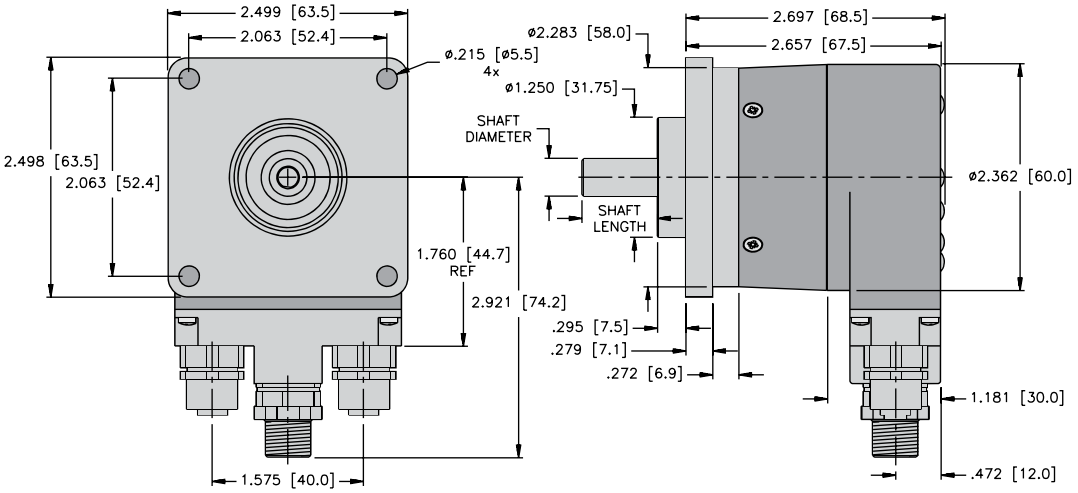

We reserve the right to make technical alterations without prior notice.

Absolute, Singleturn Type RS-25 (Shaft) / RS-33 (Blind Hollow Shaft) PROFINET IO

Dimensions: RS-33 Blind Hollow Shaft Version

RS-33 Flange T
Connection R3M12

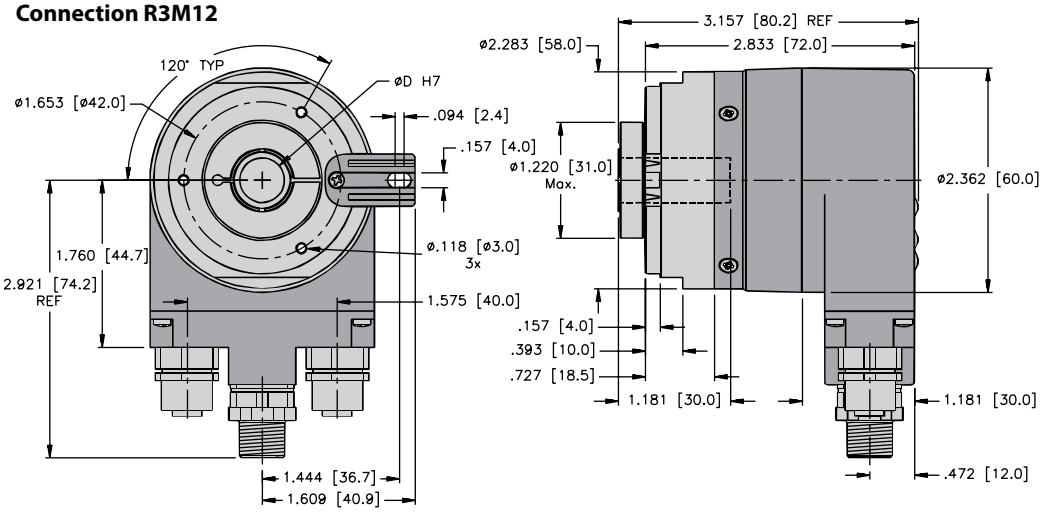

RS-33 Flange E
Connection R3M12

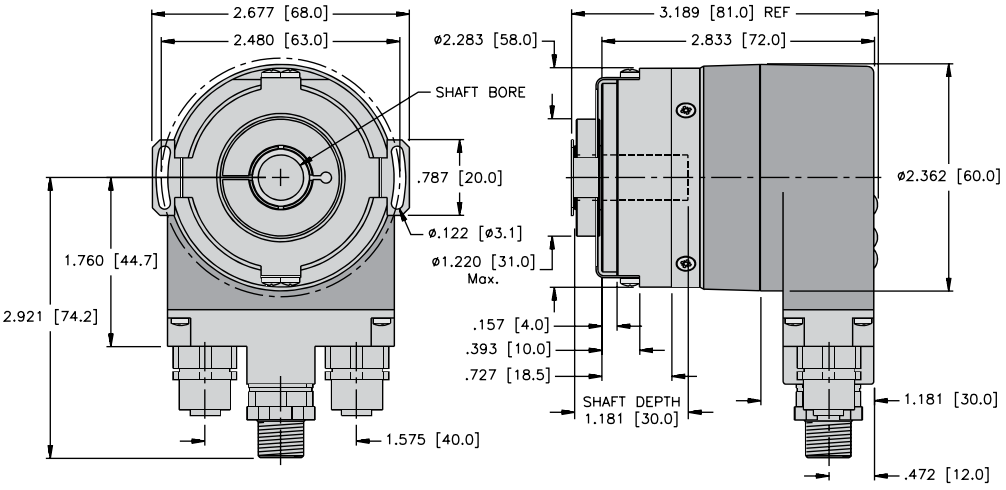

RS-33 Flange E1
Connection R3M12

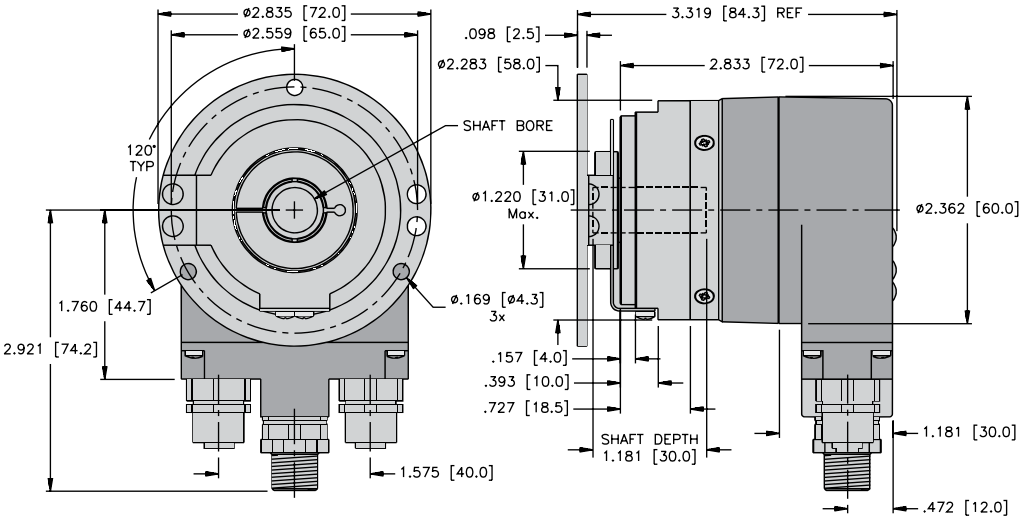

We reserve the right to make technical alterations without prior notice.

Turck Inc. | 3000 Campus Drive, Minneapolis, MN 55441 | T +1 800 544 7769 | F +1 763 553 0708 | www.turck.com

Absolute, Singleturn Type RS-107 (Shaft) / RS-108 (Blind Hollow Shaft) EtherNet/IP

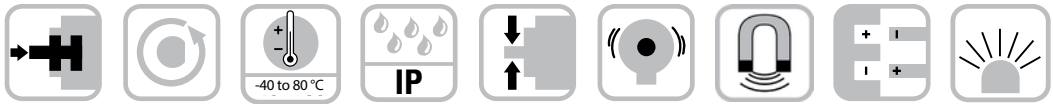

Bearing-Lock | High rotational speed | Temperature | High IP | High shaft load capacity | Shock/vibration resistant | Magnetic field proof | Reverse polarity protection | Optical sensor

Reliable

- Increased ability to withstand vibration and installation errors. Sturdy Bearing-Lock design structure eliminates machine downtime and repairs.
- Wide temperature range of -40 to +176 °F(-40 to +80 °C).
- Fewer components and connection points increase the operational reliability: Turck OptoASIC technology with highest integration density(Chip-on-board).



Absolute

EtherNet/IP

Fast

- 5x faster position value transfer that the usual market encoder – RPI time of 1 ms
- Fast and easy commissioning, configuration possible through cyclic services
- M12 connector ensures fast, simple, error-free connection

Versatile

- Thanks to the implementation of DLR (Device Level Ring) a single cable break does not lead to a "machine down" state.
- 16 bits total resolution, shafts up to 10 mm, blind hollow shafts up to 15 mm and certified EtherNet/IP functionality.
- The optical absolute singleturn EtherNet/IP encoders were designed for time sensitive applications. Their distinctive features help not only with the machine's performance as well as uptime, but also contribute to time and cost savings.

We reserve the right to make technical alterations without prior notice.

Mechanical Characteristics:

Max. speed shaft version (IP65) up to 158 °F (70 °C): Max. speed shaft version (IP65) up to Tmax: Max. speed blind hollow shaft version (IP65) up to 158 °F (70 °C): Max. speed blind hollow shaft version (IP65) up to Tmax:	8,000 RPM, continuous 6000 RPM 6,000 RPM, continuous 4000 RPM 6,000 RPM, continuous 4000 RPM 4,000 RPM, continuous 3,000 RPM
Starting torque at 68 °F (20 °C):	1.4 oz-in (< 0.01 Nm)
Moment of inertia:	Shaft version: 0.16 oz-in^2 (3.0 x 10^{-6} kgm^2) Hollow shaft version: 0.32 oz-in^2 (6.0 x 10^{-6} kgm^2)
Radial load capacity of shaft:	18 lbs (80 N)
Axial load capacity of shaft:	9 lbs (40 N)
Weight:	approx. 1.0 lbs (0.45 kg)
Protection acc. to EN 60 529:	IP65
Working temperature:	-40 to +176 °F (-40 to +80 °C)
Materials:	Shaft: stainless steel, Flange: aluminum, Housing: aluminum
Shock resistance acc. to EN 60068-2-27:	> 250 g (> 2,500 m/s^2), 6 ms
Vibration resistance acc. to EN 60068-2-26:	> 10 g (> 100 m/s^2), 55-2,000 Hz

General Information about EtherNetIP

EtherNet/IP conformance tested acc. to version CT-12 of Dec. 11, 2014
EtherNet/IP specification Vol 2, Ed 1.17
CIP specification Vol 1, Ed 3.16.

Applications

Industrial Ethernet is increasingly imposing itself as the new communication standard in automation technology. The goal is to create a vertical integration – that is to say: only one core computer, from the control level up to the industrial production plants – that will be able to control any devices.

The Turck EtherNet/IP encoders demonstrate their abilities in the following application examples: automotive production, logistics, metal-working, textile, printing and packaging machines.

Absolute, Singleturn Type RS-107 (Shaft) / RS-108 (Blind Hollow Shaft) EtherNet/IP

General Electrical Characteristics:

Supply voltage:	10-30 VDC
Current consumption (without output load):	Max. 250 mA
Reverse polarity protection at power supply (+V):	Yes
CE compliant acc. to:	EMC guideline 2014/30/EU RoHS guideline 2011/65/EU
UL approval:	file E356899

Device Characteristics:

Singleturn resolution Default value:	1-65536 (16 bit), (scalable: 1-65536) 65536 (16 bit)
Code:	Binary
Interface:	EtherNet/IP

Rear side connection and display elements

1 LED: Link 1
2 LED: Mod.
3 LED: Net.
4 LED: Encoder
5 LED: Link 2
6 Power
7 Port 1
8 Port 2
9 Switch: x1
10 Switch: x100
11 Switch: x10

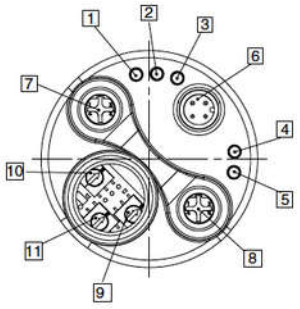

The following functionalities are integrated:

Adjustable parameters
- Preset
- Count direction
- Resolution
- Unity of speed
- IP address
- Number of revolutions
- Position
- Diagnosis
- Position limit
- Warning messages

Objects (CIP Objects)
- Identity Object
- Message Router
- Assembly Object
- Connection Manager
- Parameter Object
- Position Sensor Object
- Qos Object
- Port Object
- TCP / IP Interface Object
- EtherNet Link Object

EtherNet/IP features
- DLR (Device Level Ring) possible
- Qos (Quality of Service) possible
- ACD (Address Conflict Detection)
- Multicast and unicast capability

We reserve the right to make technical alterations without prior notice.

Standard Wiring (Bus):
(M12 Eurofast® Connector, D-Coded)

Direction:	Port 1				Port 2			
Signal:	Transmit data+	Receive data+	Transmit data-	Receive data-	Transmit data+	Receive data+	Transmit data-	Receive data-
Abbrv:	TxD+	RxD+	TxD-	RxD-	TxD+	RxD+	TxD-	RxD-
M12 Eurofast	1	2	3	4	1	2	3	4

Standard Wiring (Power Supply):
M12 Eurofast Connector

Signal:	Power Supply	N/C	Common	N/C
Abbrv:	+V	-	0 V	-
M12 Eurofast	1	2	3	4

Wiring Diagrams:

Bus	Power Supply
Female Encoder View	Male Encoder View
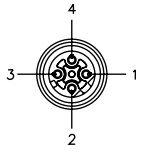	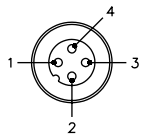
M12 Eurofast Pinout	M12 Eurofast Pinout
Mating Cordset: **RSSD 441-***	Mating Cordset: **RK 4.4T-***

Absolute, Singleturn Type RS-107 (Shaft) / RS-108 (Blind Hollow Shaft) EtherNet/IP

Part Number Key: RS-107 Shaft Version

A	B	C		D		E
RS-107T	6	C	-	9N16B	-	B3M12

A	Type
RS-107T	Ø 58 mm, Shaft, IP65 Shaft Seal

B	Shaft (Ø x L)
6	Ø 6 mm x 10 mm
10	Ø 10 mm x 20 mm
A0	Ø 1/4" x 7/8"
A1	Ø 3/8" x 7/8"

C	Flange
C	Ø 58 mm Clamping Flange
S	Ø 58 mm Servo Flange
R	2.5" Square Flange

D	Voltage Supply and Output Type
9N16B	10-30 VDC, EtherNet/IP w/DLR

E	Type of Connection
B3M12	Axial 3 x M12 Eurofast Connectors

Part Number Key: RS-108 Blind Hollow Shaft Version

A	B	C		D		E
RS-108C	10	T	-	9N16B	-	B3M12

A	Type
RS-108C	Ø 58 mm, Blind Hollow Shaft, IP65 Shaft Seal

B	Bore (30 mm Insertion Depth)
10	Ø 10 mm
12	Ø 12 mm
14	Ø 14 mm
15	Ø 15 mm
A1	Ø 3/8"
A3	Ø 1/2"

C	Flange
E	Ø 63 mm Flange w/ Slotted Flex Mount
E1	Ø 65 mm Flange w/ Flex Mount
T	Flange w/ Torque Stop

D	Voltage Supply and Output Type
9N16B	10-30 VDC, EtherNet/IP w/DLR

E	Type of Connection
B3M12	Axial 3 x M12 Eurofast Connectors

Accessories:

- See page H1, Connectivity, for cables and connectors
- See page G1, Accessories, for mounting attachments and couplings

We reserve the right to make technical alterations without prior notice.

Absolute, Singleturn Type RS-107 (Shaft) / RS-108 (Blind Hollow Shaft) EtherNet/IP

Dimensions: RS-107 Shaft Version

RS-107 Flange C
Connection B3M12

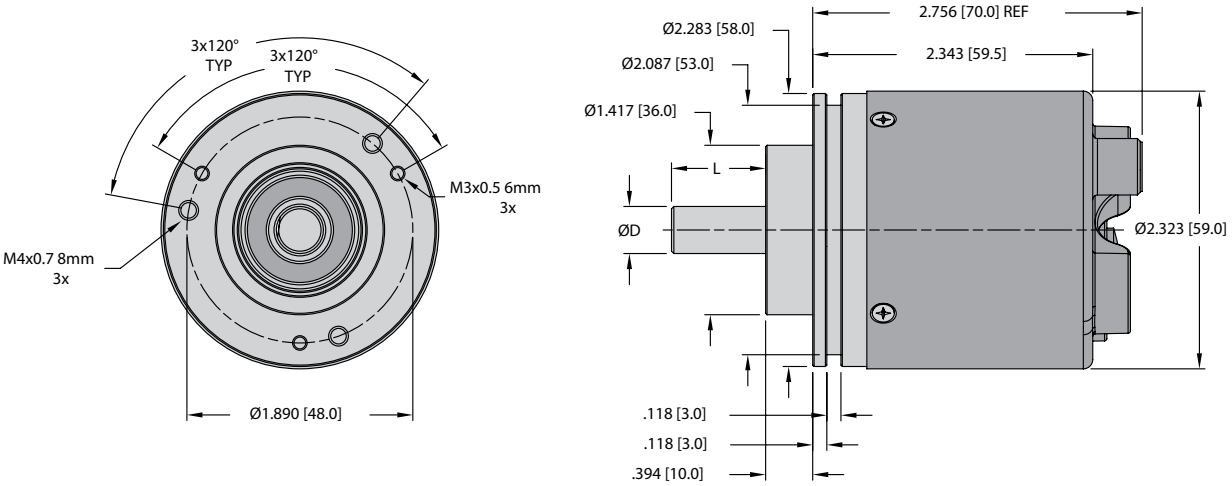

RS-107 Flange S
Connection B3M12

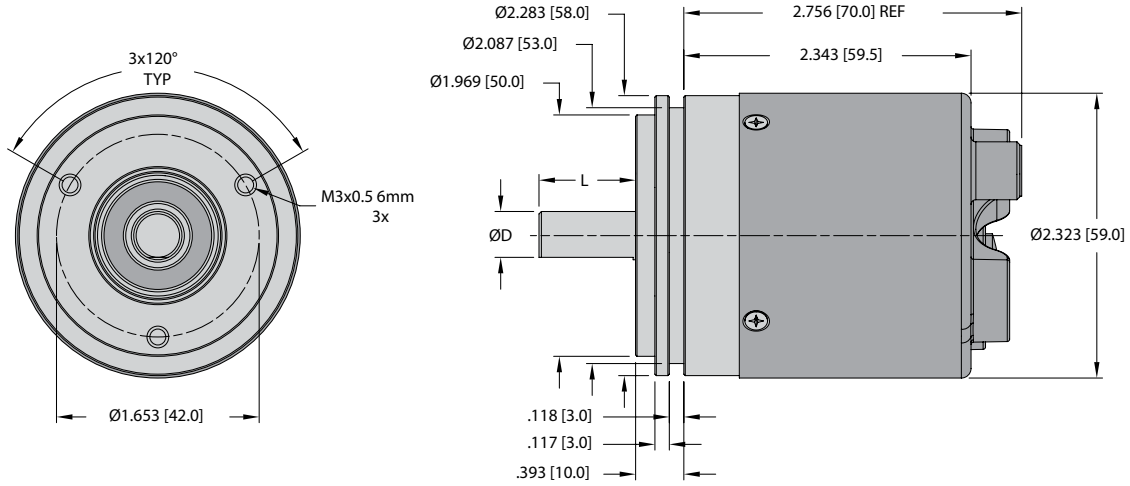

RS-107 Flange R
Connection B3M12

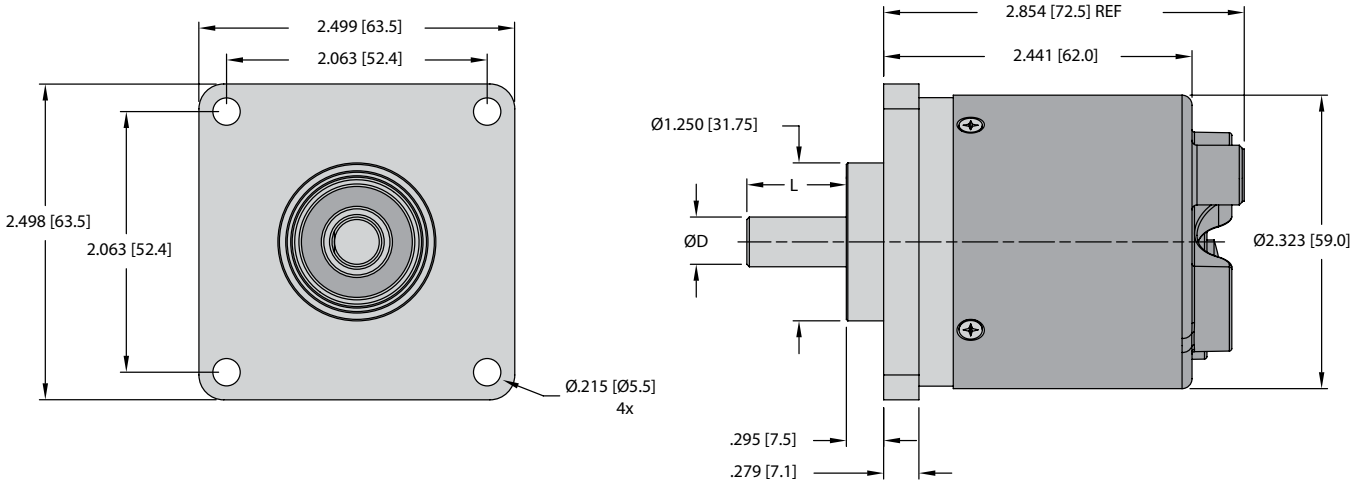

We reserve the right to make technical alterations without prior notice.

Absolute, Singleturn Type RS-107 (Shaft) / RS-108 (Blind Hollow Shaft) EtherNet/IP

Dimensions: RS-108 Blind Hollow Shaft Version

RS-108 Flange T
Connection B3M12

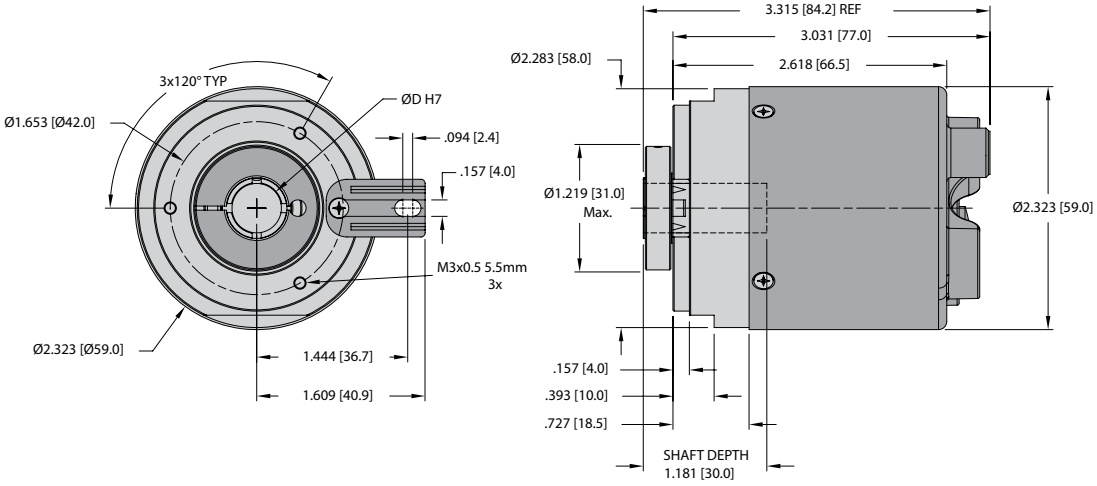

RS-108 Flange E
Connection B3M12

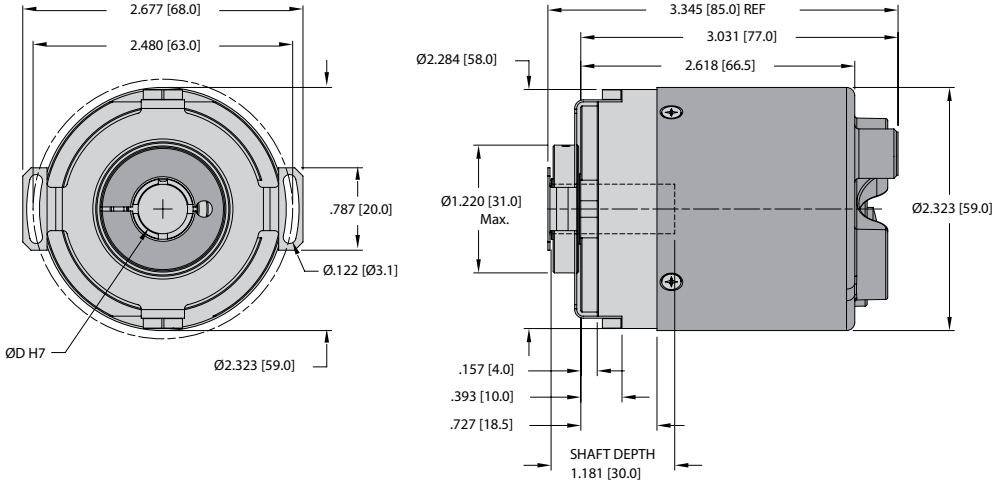

RS-108 Flange E1
Connection B3M12

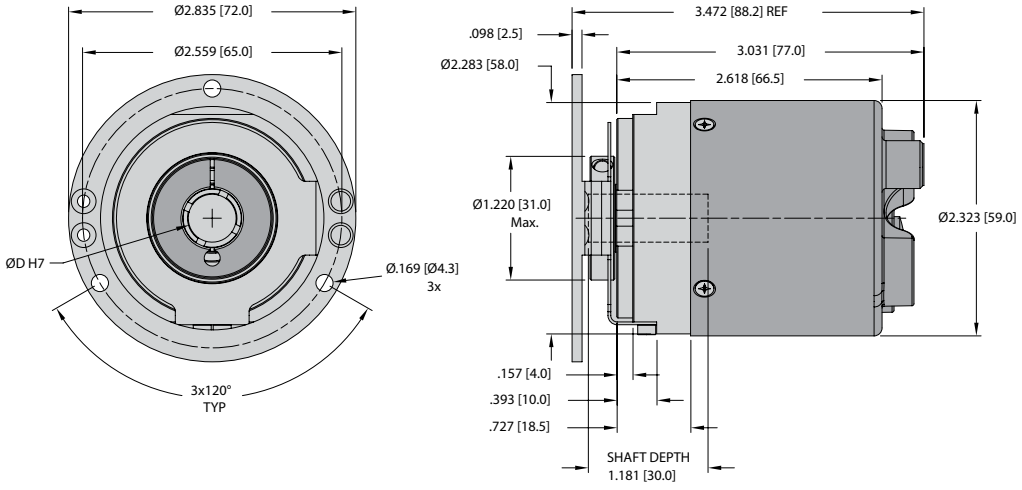

We reserve the right to make technical alterations without prior notice.

Absolute, Multiturn Type RM-97 (Shaft) / RM-98 (Blind Hollow Shaft) — Analog

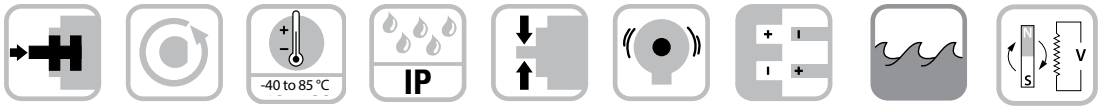

Bearing-Lock | High rotational speed | Temperature range | High IP | High shaft load capacity | Shock/vibration resistant | Reverse polarity protection | Surface protection salt spray-tested optional | Energy Harvesting

Reliable
- Sturdy bearing construction in Bearing-Lock design for resistance against vibration and installation errors.
- Without gear and without battery, thanks to the Energy Harvesting technology.



Absolute

Insensitive
- Reduced number of components ensures magnetic insensitivity.
- IP67 protection and wide temperature range –40 to +85 °C.

Application Oriented
- Current output 4 - 20 mA.
- Voltage output 0 - 10 V or 0 - 5 V.
- Measuring range scalable.
- Limit switch function.

Mechanical Characteristics:

Max. speed:	
Shaft or blind hollow shaft version:	6000 RPM
Without shaft seal (IP65):	3000 RPM (continous)
Shaft or blind hollow shaft version:	4000 RPM
With shaft seal (IP67):	2000 RPM (continous)
Starting torque (68 °F | 20 °C):	
Without shaft seal (IP65):	< 1.0 oz - in (< 0.007 Nm)
With shaft seal (IP67):	< 1.4 oz - in (< 0.01 Nm)
Shaft load capacity:	
Radial:	9.0 lbs (40 N)
Axial:	4.5 lbs (20 N)
Weight:	approx. 0.44 lbs (0.2 kg)
Protection acc. to EN 60529:	IP65 / IP67
Working temperature range:	–40 to +185 °F (–40 to +85 °C)
Materials:	
Shaft / Hollow shaft:	stainless steel
Flange:	aluminium
Housing:	zinc die-cast
Cable:	PVC
Shock resistance acc. to EN 60068-2-27:	250g (2500 m/s²), 6 ms
Vibration resistance acc. to EN 60060-2-6:	30g (300 m/s²), 10 - 2000 Hz

We reserve the right to make technical alterations without prior notice.

Turck Inc. | 3000 Campus Drive, Minneapolis, MN 55441 | T +1 800 544 7769 | F +1 763 553 0708 | www.turck.com

Absolute, Multiturn Type RM-97 (Shaft) / RM-98 (Blind Hollow Shaft) — Analog

General Electrical Characteristics Interface 4 - 20mA:

Power supply:	10 - 30 VDC
Current consumption (no load):	max. 30 mA
Reverse polarity protection at power supply (+V):	yes
Short-circuit protected outputs:	yes[1)]
Measuring range: Factory setting: Optionally scalable:	 2^4 revolutions up to 2^{16} revolutions
DA converter resolution:	12 bit
Singleturn accuracy, at 77 °F | 25 °C:	±1 °
Temperature coefficient:	< 100 ppm/K
Repeat accuracy at 77 °F | 25 °C:	±0.2 °
Output load:	max. 200 0hm at 10 VDC max. 900 0hm at 24 VDC max. 1200 0hm at 30 VDC
Setting time:	< 1 ms, R_{Load} = 900 0hm, 77 °F | 25 °C
LEDs (green/red):	• system status • current loop interruption— input load too high • reference point display (only with factory settings) at cw: betw. 0 ° and 1 ° at ccw: betw. 0 ° and –1 ° • status in teach mode
Options:	• output signal scalable via the teach inputs • output signal scalable via the teach inputs + limit switch function
Teach inputs:	level= +V for 1 s minimum
PowerON time:	< 1 s
Update Rate:	1 ms
e1 compliant acc. to (pending):	EU guideline 2009/19/EC (acc. to EN 55025, ISO 11452 and ISO 7637)
UL approval:	file E356899
CE compliant acc. to:	EMC guideline 2014/30/EU RoHS guideline 2011/65/EU

General Characteristics Voltage Interface 0 - 10 V / 0 - 5 V:

Power supply:	output 0 - 5 V 10 - 30 VDC output 0 - 10 V 15 - 30 VDC
Current consumption (no load):	max. 30 mA
Reverse polarity protection at power supply (+V):	yes
Short-circuit protected outputs:	yes[1)]
Measuring range: Factory setting: Optionally scalable:	 2^4 revolutions up to 2^{16} revolutions
DA converter resolution:	0 - 10 V 12 bit 0 - 5 V 11 bit
Singleturn accuracy, at 77°F | 25°C:	±1 °
Temperature coefficient:	< 100 ppm/K
Repeat accuracy at 77°F | 25°C:	±0.2 °
Current output:	max. 10 mA
Setting time:	< 1 ms, R_{Load} = 1000 0hm, 77 °F | 25 °C
LEDs (green/red):	• system status • reference point display (only with factory settings) at cw: betw. 0 ° and 1 ° at ccw: betw. 0 ° and –1 ° • status in teach mode
Options:	• output signal scalable via the teach inputs • output signal scalable via the teach inputs + limit switch function
Teach inputs:	level= +V for 1 s minimum
PowerON time:	< 1 s
Update Rate:	1 ms
e1 compliant acc. to (pending):	EU guideline 2009/19/EC (acc. to EN 55025, ISO 11452 and ISO 7637)
UL approval:	file E356899
CE compliant acc. to:	EMC guideline 2014/30/EU RoHS guideline 2011/65/EU

[1)] = when the power supply is correctly applied.

Measuring Range 'AL' or 'AR':

Connection Type:	Common (0V)	+V	Output	Set 1	Set 2
Cable:	WH	BN	GN	N/C	N/C
M12 pin:	3	1	2	N/C	N/C

Measuring Range 'S*NS' or 'S*WL':

Connection Type:	Common (0V)	+V	Output	Set 1	Set 2
Cable:	WH	BN	GN	GY	PK
M12 pin:	3	1	2	4	5

Wiring Diagram:

5-pin M12 Eurofast Connection

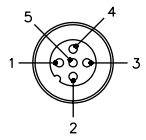

Mating Cordset: **RKC 4.5T-*/S618**
Teaching Adapter: **VB2-SP6**

We reserve the right to make technical alterations without prior notice.

Absolute, Multiturn Type RM-97 (Shaft) / RM-98 (Blind Hollow Shaft) — Analog

Note: Encoders must be ordered with a clockwise or counterclockwise profile. This determines whether the analog output increases or decreases in the given direction.

Example (output signal profile):

version 4 - 20 mA
version 0 - 10 V
version 0 - 5 V

Clockwise (CW) version

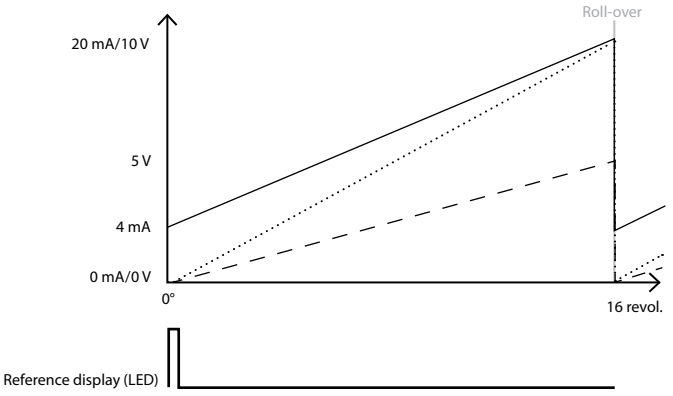

Scalable version without limit switch function

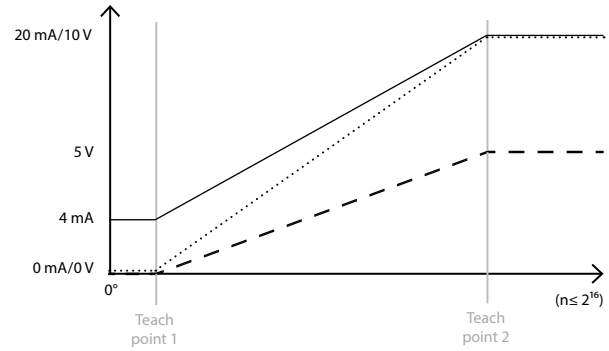

No reference point display

Example (output signal profile):

version 4…20 mA
version 0…10 V
version 0…5 V

Counter Clockwise (CCW) version

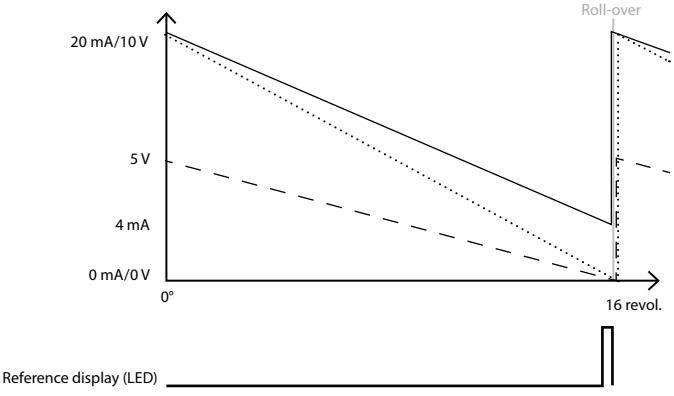

Scalable version with limit switch function

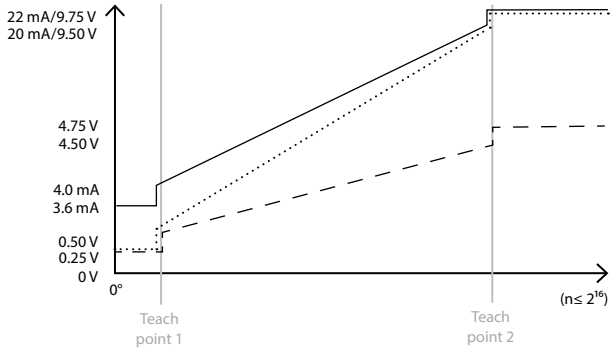

No reference point display

Note: Factory-set measuring range: 2^4 revolutions with roll-over

Note: Limit switch function:

version:	0 - 10 V	0 - 5 V	4 - 20 mA
limit switch low:	0.25 V	0.25 V	3.60 mA
limit switch high:	9.75 V	4.75 V	22.00 mA

We reserve the right to make technical alterations without prior notice.

Turck Inc. | 3000 Campus Drive, Minneapolis, MN 55441 | T +1 800 544 7769 | F +1 763 553 0708 | www.turck.com

Absolute, Multiturn Type RM-97 (Shaft) / RM-98 (Blind Hollow Shaft) — Analog

Part Number Key: RM-97 Shaft Version

A	B	C		D	E		F
RM-97S	6	C	-	7A	AL	-	H1151

A	Type
RM-97S	Ø 39 mm, Shaft w/Flat, IP67 Shaft Seal
RM-97T	Ø 39 mm, Shaft w/Flat, IP65 Shaft Seal

B	Shaft (Ø × L)
6	Ø 6 mm × 12.5 mm
8	Ø 8 mm × 15 mm
10	Ø 10 mm × 20 mm
A0	Ø 1/4" × 1/2"

C	Flange
C	Ø 36 mm Clamping Flange
S	Ø 36 mm Servo Flange

D	Voltage Supply and Output Type
7A	10 - 30 VDC, 4 - 20 mA
8B	15 - 30 VDC, 0 - 10 V
BA	10 - 30 VDC, 0 - 5 V

E	Measuring Range
AL	16 Turns, Count Direction CCW*
AR	16 Turns, Count Direction CW*
SALNS	Scalable to 65,536 Turns, CCW*, w/o Limit Switch
SALWL	Scalable to 65,536 Turns, CCW*, w/ Limit Switch
SARNS	Scalable to 65,536 Turns, CW*, w/o Limit Switch
SARWL	Scalable to 65,536 Turns, CW*, w/ Limit Switch

* = increasing code values when shaft turning in direction listed. Top view on shaft.

F	Type of Connection
H1151	Radial 5-pin M12 Eurofast Connector
H1451	Axial 5-pin M12 Eurofast Connector
C1M	Radial Cable (1m PVC)
CA1M	Axial Cable (1m PVC)

Part Number Key: RM-98 Blind Hollow Shaft Version

A	B	C		D	E		F
RM-98B	6	E	-	7A	AL	-	H1151

A	Type
RM-98B	Ø 36 mm, Blind Hollow Shaft, IP67 Shaft Seal
RM-98C	Ø 36 mm, Blind Hollow Shaft, IP65 Shaft Seal

B	Bore (18.5 mm insertion depth)
6	Ø 6 mm
8	Ø 8 mm
10	Ø 10 mm
A0	Ø 1/4" × 1/2"

C	Flange
E	Ø 46 mm Flange w/ Slotted Flex Mount
T	Flange w/ Long Torque Stop

D	Voltage Supply and Output Type
7A	10 - 30 VDC, 4 - 20 mA
8B	15 - 30 VDC, 0 - 10 V
BA	10 - 30 VDC, 0 - 5 V

E	Measuring Range
AL	16 Turns, Count Direction CCW*
AR	16 Turns, Count Direction CW*
SALNS	Scalable to 65,536 Turns, CCW*, w/o Limit Switch
SALWL	Scalable to 65,536 Turns, CCW*, w/ Limit Switch
SARNS	Scalable to 65,536 Turns, CW*, w/o Limit Switch
SARWL	Scalable to 65,536 Turns, CW*, w/ Limit Switch

* = increasing code values when shaft turning in direction listed. Top view on shaft.

F	Type of Connection
H1151	Radial 5-pin M12 Eurofast Connector
H1451	Axial 5-pin M12 Eurofast Connector
C1M	Radial Cable (1m PVC)
CA1M	Axial Cable (1m PVC)

We reserve the right to make technical alterations without prior notice.

Absolute, Multiturn Type RM-97 (Shaft) / RM-98 (Blind Hollow Shaft) — Analog

Dimensions: RM-97 Shaft Version

RM-97 Flange C
Connection H1151 & H1451

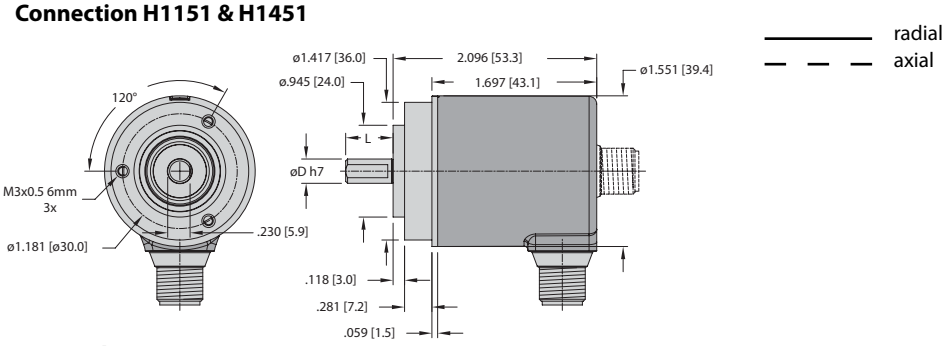

RM-97 Flange S
Connection C1M & CA1M

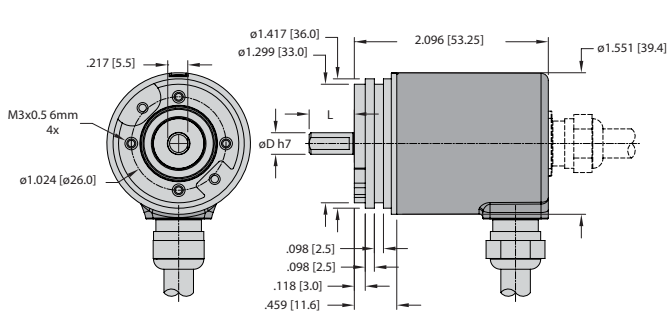

Dimensions: RM-98 Blind Hollow Shaft Version

RM-98 Flange T
Connection C1M & CA1M

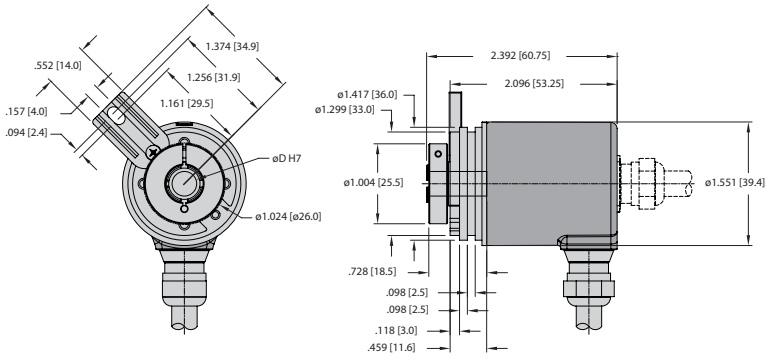

RM-98 Flange E
Connection H1151 & H1451

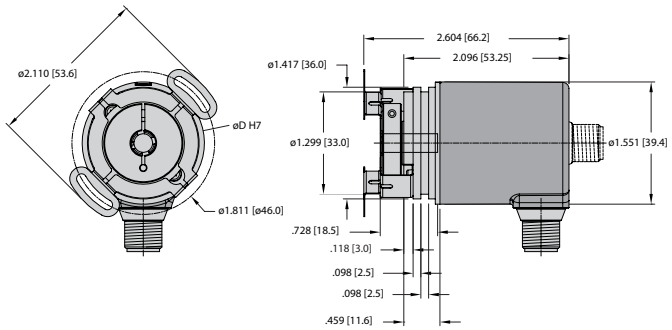

Mounting advice:
The flanges and shafts of the encoder and drive should not be rigidly coupled together at the same time. We recommend the use of suitable couplings (see page G1, Accessories).

We reserve the right to make technical alterations without prior notice.

Turck Inc. | 3000 Campus Drive, Minneapolis, MN 55441 | T +1 800 544 7769 | F +1 763 553 0708 | www.turck.com

Absolute, Multiturn Type RM-99 (Shaft) / RM-100 (Blind Hollow Shaft) SSI

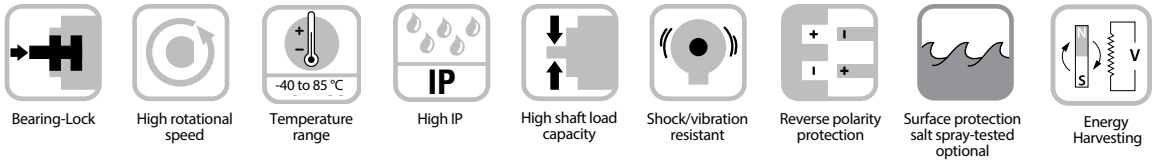

Bearing-Lock | High rotational speed | Temperature range | High IP | High shaft load capacity | Shock/vibration resistant | Reverse polarity protection | Surface protection salt spray-tested optional | Energy Harvesting

Reliable

- Sturdy bearing construction in Bearing-Lock design for resistance against vibration and installation errors.
- Without gear and without battery, thanks to the Energy Harvesting technology



Absolute

Insensitive

- Reduced number of components ensures magnetic insensitivity.
- IP67 protection and wide temperature range –40 °C to +85 °C.

Application Oriented

- Absolute accuracy ±1 °.
- Repeat accuracy ±0.2 °.
- Short control cycles, clock frequency with SSI up to 2 MHz.
- Max. resolution 38 bit (14 bit ST + 24 bit MT).

Mechanical Characteristics:

Max. speed:	
Shaft or blind hollow shaft version:	6000 RPM
Without shaft seal (IP65):	3000 RPM (continous)
Shaft or blind hollow shaft version:	4000 RPM
With shaft seal (IP 67):	2000 RPM (continous)
Starting torque (68 °F | 20 °C):	
Without shaft seal (IP65):	< 1.0 oz - in (0.007 Nm)
With shaft seal (IP67):	< 1.4 oz - in (0.01 Nm)
Shaft load capacity:	
Radial:	9 lbs (40 N)
Axial:	4.5 lbs (20 N)
Weight:	approx. 0.44 lbs (0.2 kg)
Protection acc. to EN 60529:	IP65/IP67
Working temperature:	–40 to +185 °F (–40 to +85 °C)
Materials:	
Shaft / Hollow shaft:	stainless steel
Flange:	aluminum
Housing:	zinc die-cast
Cable:	PUR
Shock resistance acc. to EN 60068-2-27:	250 g (2,500 m/s²), 6 ms
Vibration resistance acc. to EN 60068-2-6:	30 g (300 m/s²), 10 - 2,000 Hz

We reserve the right to make technical alterations without prior notice.

Absolute, Multiturn Type RM-99 (Shaft) / RM-100 (Blind Hollow Shaft) SSI

General Electrical Characteristics:

Power supply	10 - 30 VDC
Current consumption (no load):	max. 40 mA,
Reverse polarity protection at power supply (+V):	yes
Short-circuit protected outputs:	yes[1)]
e1 compliant acc. to (pending):	EU guideline 2009/19/EC (acc. to EN 55025, ISO 11452 and ISO 7637)
UL approval:	file E356899
CE compliant acc. to:	EMC guideline 2014/30/EU RoHS guideline 2011/65/EU

[1)] = short circuit protection to **0**V or to output when power supply correctly applied.

Interface Characteristics SSI:

Output driver:	RS485 transceiver type
Permissible load / channel:	max. +/– 30 mA
Signal high:	typ 3.8 V
Signal level low with I_{Load} = 20 mA:	typ 1.3 V
Resolution singleturn:	10 - 14 bit
Absolute accuracy [2)]:	±1 °
Repeat accuracy:	±0.2 °
Number of revolutions (multiturn):	max. 24 bit
Code:	binary or gray
SSI clock rate:	50 kHz - 2 MHz
Data refresh rate:	2 ms
Monoflop time:	≤ 15 µs

Note: If the clock cycle starts within the monoflop time a second data transfer begins with the same data. If the clock cycle starts after the monoflop time the cycle begins with the new values. The update rate is dependent on the clock speed, data length and monoflop time.

[2)] = over the entire tempetature range.

SET Input:

Input characteristics:	active HIGH
Input type:	comparator
Signal level high:	min. 60% of +V (supply voltage), max: +V
Signal level low:	max. 30% of +V (supply voltage)
Input current:	< 0.5 mA
Min. pulse duration (SET):	10 ms
Input delay:	1 ms
New position data readable after:	1 ms
Internal processing time:	200 ms

The encoder can be set to zero at any position by means of a HIGH signal on the SET input. Other preset values can be factory-programmed. The SET in put has a signal processing time of approx. 1 ms, after which the new position data can be read via SSI or BiSS. Once the SET function has been triggered, the encoder requires an internal processing time of typ. 200 ms; during this time the power supply must not be switched off.

The SET function should be carried out while the encoder is at rest.

If this input is not used, it should be connected to 0 V (Encoder ground GND) in order to avoid interferences.

DIR Input:

Direction input: A HIGH signal switches the direction of rotation from the default cw to ccw. This inverted function can also be factory-programmed. If this input is not used, it should be connected to 0 V (Encoder ground GND)in order to avoid interferences.

Response time (DIR input)	1ms

Power-On Delay:

After Power-ON the device requires a time of approx. 150 ms before valid data can be read.

Hot plugging of the encoder should be avoided.

We reserve the right to make technical alterations without prior notice.

Wiring Diagrams:

Connection Type:	GND (0 V)	V+	+Clock	–Clock	+Data	– Data	SET	DIR	PE
Cable:	WH	BN	GN	YE	GY	PK	BU	RD	Shield
M12 pin:	1	2	3	4	5	6	7	8	PH

Male Encoder View
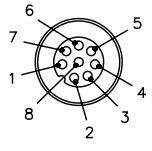
M12 Eurofast Pinout
Mating Cordset: E-RKC 8T-264-*

* Length in meters.

Turck Inc. | 3000 Campus Drive, Minneapolis, MN 55441 | T +1 800 544 7769 | F +1 763 553 0708 | www.turck.com

Absolute, Multiturn Type RM-99 (Shaft) / RM-100 (Blind Hollow Shaft) SSI

Part Number Key: RM-99 Shaft Version

A	B	C		D	E1	E2		F
RM-99S	6	C	-	3C	10S	12M	-	H1181

A	Type
RM-99S	Ø 39 mm, Shaft w/ Flat, IP67 Shaft Seal
RM-99T	Ø 39 mm, Shaft w/ Flat, IP65 Shaft Seal

B	Shaft (Ø x L)
6	Ø 6 mm x 12.5 mm
8	Ø 8 mm x 15 mm
10	Ø 10 mm x 20 mm
A0	Ø 1/4" x 1/2"

C	Flange
C	Ø 36 mm Clamping Flange
S	Ø 36 mm Servo Flange

D	Voltage Supply and Output Type
3C	10 - 30 VDC, SSI (Gray Code)
5C	10 - 30 VDC, SSI (Binary Code)

E1	Resolution (singleturn)
10S	10 bit
12S	12 bit
13S	13 bit
14S	14 bit

E2	Resolution (multiturn)
12M	12 bit
16M	16 bit
20M	20 bit
24M	24 bit

F	Type of Connection
H1181	Radial 8-pin M12 Eurofast Connector
H1481	Axial 8-pin M12 Eurofast Connector
C1M	Radial Cable (1m PUR)
CA1M	Axial Cable (1m PUR)

Part Number Key: RM-100 Blind Hollow Shaft Version

A	B	C		D	E1	E2		F
RM-100B	6	E	-	3C	10S	12M	-	H1181

A	Type
RM-100B	Ø 39 mm, Blind Hollow Shaft, IP67 Shaft Seal
RM-100C	Ø 39 mm, Blind Hollow Shaft, IP65 Shaft Seal

B	Bore (18.5 mm insertion depth)
6	Ø 6 mm
8	Ø 8 mm
10	Ø 10 mm
A0	Ø 1/4"

C	Flange
E	Ø 46 mm Flange w/ Slotted Flex Mount
T	Flange w/ Long Torque Stop

D	Voltage Supply and Output Type
3C	10 - 30 VDC, SSI (Gray Code)
5C	10 - 30 VDC, SSI (Binary Code)

E1	Resolution (singleturn)
10S	10 bit
12S	12 bit
13S	13 bit
14S	14 bit

E2	Resolution (multiturn)
12M	12 bit
16M	16 bit
20M	20 bit
24M	24 bit

F	Type of Connection
H1181	Radial 8-pin M12 Eurofast Connector
H1481	Axial 8-pin M12 Eurofast Connector
C1M	Radial Cable (1m PUR)
CA1M	Axial Cable (1m PUR)

We reserve the right to make technical alterations without prior notice.

Absolute, Multiturn Type RM-99 (Shaft) / RM-100 (Blind Hollow Shaft) SSI

Dimensions: RM-99 Shaft Version

RM-99 Flange C
Connection H1181 & H1481

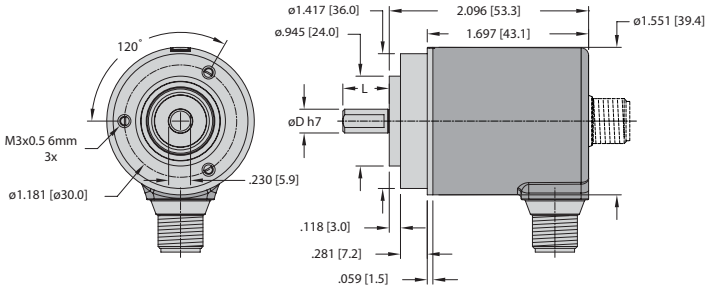

RM-99 Flange S
Connection C1M & CA1M

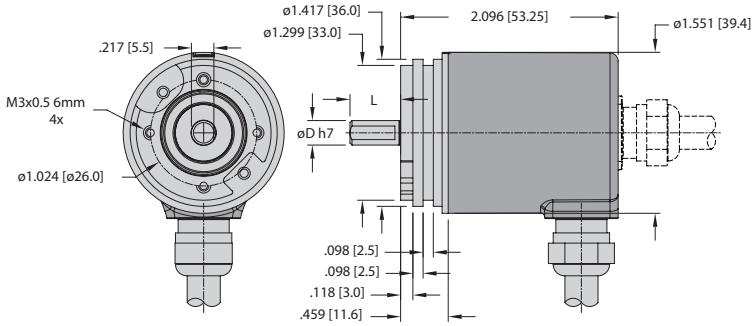

Dimensions: RM-100 Blind Hollow Shaft Version

RM-100 Flange T
Connection C1M & CA1M

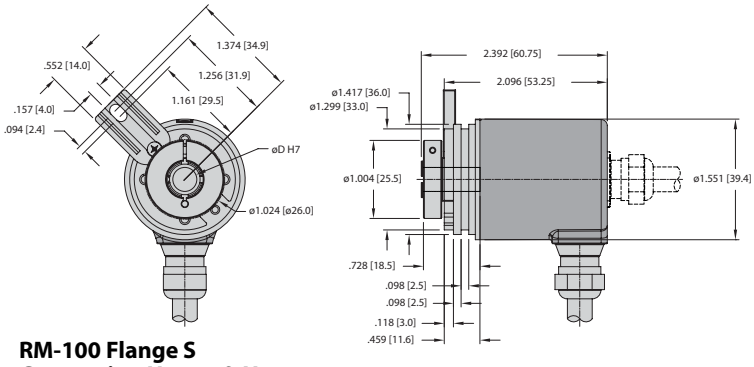

RM-100 Flange S
Connection H1181 & H1481

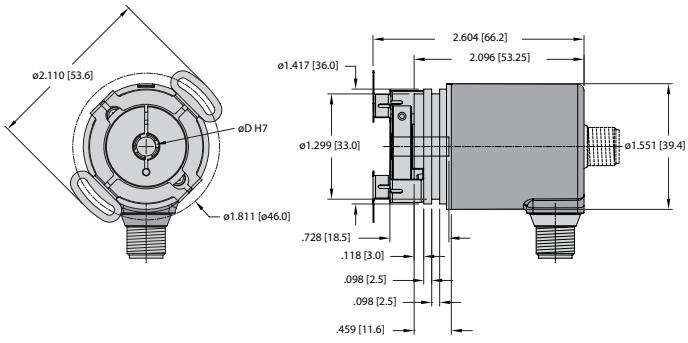

Mounting Advice:
The flanges and shafts of the encoder and drive should not be rigidly coupled together at the same time. We recommend the use of suitable couplings (see page G1, Accessories).

We reserve the right to make technical alterations without prior notice.

Absolute, Multiturn Type RM -101 (Shaft) / RM-102 (Blind Holllow Shaft) CANopen



Bearing-Lock | High rotational speed | Temperature range | High IP | High shaft load capacity | Shock/vibration resistant | Reverse polarity protection | Surface protection salt spray-tested optional | Energy Harvesting

Reliable

- Sturdy bearing construction in Bearing-Lock design for resistance against vibration and installation errors.
- Without gear and without battery, thanks to the Energy Harvesting technology.



Absolute

CANopen

Insensitive

- Reduced number of components ensures magnetic insensitivity.
- IP67 protection and wide temperature range -40 °C to +85 °C.

Up-To-The-Minute Fieldbus Performance

- LSS services for configuration of the node address and baud rate.
- Variable PDO mapping in the memory.
- Universal scaling function.
- Configuration management (bootloader).

Mechanical Characteristics:

Max. speed:	
Shaft or blind hollow shaft version:	6000 RPM
Without shaft seal (IP65):	3000 RPM (continuous)
Shaft or blind hollow shaft version:	4000 RPM
With shaft seal (IP67):	2000 RPM (continuous)
Starting torque (68 °F | 20 °C):	
Without shaft seal (IP65):	< 1.0 oz - in (0.007 Nm)
With shaft seal (IP67):	< 1.4 oz - in (0.01 Nm)
Shaft load capacity:	
Radial:	9.0 lbs (40 N)
Axial:	4.5 lbs (20 N)
Weight:	approx. 0.44 lbs (0.2 kg)
Protection acc. to EN 60529:	IP65 / IP67
Working temperature range:	–40 to +185 °F (–40 to +85 °C)
Materials:	
Shaft / Hollow shaft:	stainless steel
Flange:	aluminium
Housing:	zinc die-cast
Cable:	PVC
Shock resistance acc. to EN 60068-2-27:	250 g (2,500 m/s²), 6 ms
Vibration resistance acc. to EN 60068-2-6:	30 g (300 m/s²), 10 - 2,000 Hz

We reserve the right to make technical alterations without prior notice.

Absolute, Multiturn Type RM -101 (Shaft) / RM-102 (Blind Holllow Shaft) CANopen

General Electrical Characteristics:

Sensor:	
Power supply:	10 - 30 VDC
Current consumption (no load):	max. 30 mA
Reverse polarity protection at power supply (+V):	yes
Short-circuit protected outputs:	yes[1)]
e1 compliant acc. to (pending):	EU guideline 2009/19/EC (acc. to EN 55025, ISO 11452 and ISO 7637)
UL approval:	file E356899
CE compliant acc. to:	EMC guideline 2014/30/EU RoHS guideline 2011/65/EU

Interface Characteristics CANopen:

Resolution singleturn:	1 - 16384 (14 bit), (scalable default: 8192 (13 bit)
Absolute accuracy[2)]:	±1 °
Repeat accuracy:	±0.2 °
Number of revolutions (multiturn):	max. 16.777.216 (24 bit) scalable only via the total resolution
Total resolution:	1…274,877,906,944 (38 bit), scalable default: 33,554,432 (25 bit)
Code:	binary
Interface:	CAN high-speed acc. to ISO 11898, Basic- and Full-CAN, CAN specification 2.0 B
Protocol:	CANopen profile DS406 V4.0 with manufacturer-specific add-ons, LSS-Service, bootloader
Power-ON time:	< 1200 ms
SDO timeout:	< 1000 ms
Baud rate:	10 - 1000 k bit/s software configurable
Node address:	1 - 127 software configurable
Termination:	software configurable
LSS protocol:	CIA LSS protocol DS305, global command support for node address and baud rate, selective commands via attributes of the identity object
Bootloader:	configuration management CIA DS 302-3

[1)] = short circuit protected to 0V or to output when power supply correctly applied.
[2)] = over the entire temperature range.

General Information about CANopen

The CANopen encoders support the latest CANopen communication profile according to DS301 V4.02 . In addition, device-specific profiles like the encoder profile DS406 V3.2, DS305 (LSS) and DS302 (Bootloader) are available.

The following operating modes may be selected: Polled Mode, Cyclic Mode, Sync Mode. Moreover, scale factors, preset values, limit switch values and many other additional parameters can be programmed via the CANbus. When switching the device on, all parameters, which have been saved on a flash memory to protect them against power failure, are loaded again.

The following output values may be combined in a freely variable way as PDO(PDO mapping): **position**, **speed, acceleration** as well as the **status of the working area.**

The encoders are available with a connector or a cable connection.

The device address and baud rate can be set/ modified by means of the software.

The two-color LED located on the back indicates the operating or fault status of the CAN-bus, as well as the status of the internal diagnostics.

CANbus connection

The CANopen encoders are equipped with a bus trunk line in various lengths or a M12 connector and can be terminated in the device.

The devices do not have an integrated T-coupler nor are they looped internally and must therefore only be used as end devices.

LSS layer setting services DS305 V2.0

- Global support of node-ID and baud rate.
- Selective protocol via identity object (1018h).

CANopen Communication Profile DS301 V4.2

Among others, the following functionality is integrated (Class C2 functionality):

- NMT Slave
- Heartbeat Protocol
- Identity Object
- Error Behavior Object
- Variable PDO Mapping self-start programmable (Power on to operational), 3 Sending PDO's.
- Node address, baud rate and CANbus / programmable termination.

CANopen encoder profile DS406 V4.0

The following parameters can be programmed:

- Event mode, start optional.
- 1 work area with upper and lower limit and the corresponding output states variable PDO mapping for position, speed, work area status, error and acceleration.
- Extended failure management for position sensing.
- User interface with visual display of bus and failure status 1 LED two colors.
- Customer-specific protocol.
- "Watchdog controlled" device.

Bootloader functionality DS302-3

Configuration Management:

- Program download
- Program start
- Program erase

Standard Wiring:

Connection Type:	+V	Common (0 V)	CAN GND	CAN High	CAN Low
Cable:	BN	WH	GY	GN	YE
M12 Eurofast:	2	3	1	4	5

Wiring Diagram:

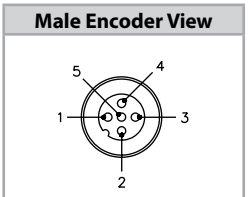

Mating Cordset[1)]:
RKC 572-*M/S3117

* Length in meters.
[1)] See Connectivity section H for corresponding cable color code.

We reserve the right to make technical alterations without prior notice.

Absolute, Multiturn Type RM -101 (Shaft) / RM-102 (Blind Holllow Shaft) CANopen

Part Number Key: RM-101 Shaft Version

A	B	C		D		E
RM-101S	6	C	-	9D38D	-	H1151

A	Type
RM-101S	Ø 39 mm, Shaft w/ Flat, IP67 Shaft Seal
RM-101T	Ø 39 mm, Shaft w/ Flat, IP65 Shaft Seal

B	Shaft (Ø × L)
6	Ø 6 mm × 12.5 mm
8	Ø 8 mm × 15 mm
10	Ø 10 mm × 20 mm
A0	Ø 1/4" × 1/2"

C	Flange
C	Ø 36 mm Clamping Flange
S	Ø 36 mm Servo Flange

D	Voltage Supply and Output Type
9D38B	10 - 30 VDC, CANopen DS 406 V4.0

E	Type of Connection
H1151	Radial 5-pin M12 Eurofast Connector
H1451	Axial 5-pin M12 Eurofast Connector
C1M	Radial Cable (1 m PVC)
CA1M	Radial Cable (1 m PVC)

Part Number Key: RM-102 Blind Hollow Shaft Version

A	B	C		D		E
RM-102B	6	E	-	9D38D	-	H1151

A	Type
RM-102B	Ø 39 mm, Blind Hollow Shaft, IP67 Shaft Seal
RM-102C	Ø 39 mm, Blind Hollow Shaft, IP65 Shaft Seal

B	Bore (18.5 mm insertion depth)
6	Ø 6 mm
8	Ø 8 mm
10	Ø 10 mm
A0	Ø 1/4"

C	Flange
E	Ø 46 mm Flange w/ Slotted Flex Mount
T	Flange w/ Long Torque Stop

D	Voltage Supply and Output Type
9D38B	10 - 30 VDC, CANopen DS 406 V4.0

E	Type of Connection
H1151	Radial 5-pin M12 Eurofast Connector
H1451	Axial 5-pin M12 Eurofast Connector
C1M	Radial Cable (1 m PVC)
CA1M	Radial Cable (1 m PVC)

We reserve the right to make technical alterations without prior notice.

Absolute, Multiturn Type RM -101 (Shaft) / RM-102 (Blind Holllow Shaft) CANopen

Dimensions: RM-101 Shaft Version

RM-101 Flange C
Connection H1151 & H1451

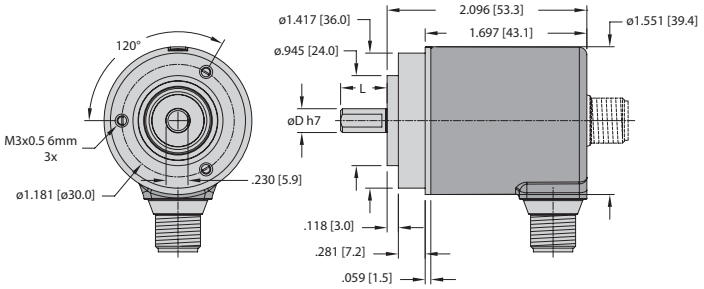

RM-101 Flange S
Connection C1M & CA1M

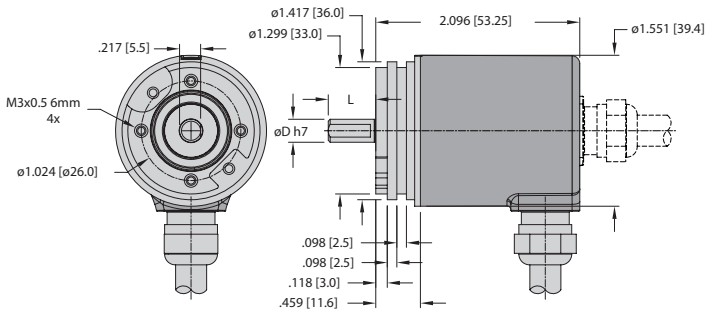

Dimensions: RM-102 Blind Hollow Shaft Version

RM-102 Flange T
Connection C1M & CA1M

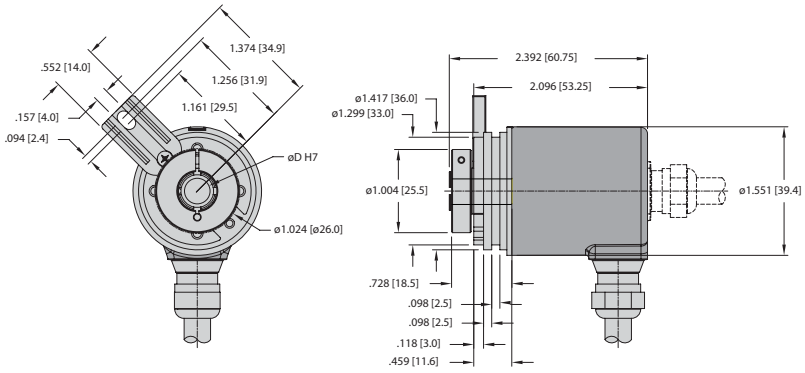

RM-102 Flange E
Connection H1151 & H1451

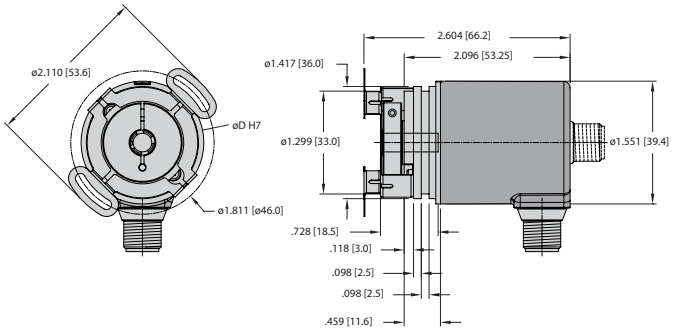

Mounting Advice:
The flanges and shafts of the encoder and drive should not be rigidly coupled together at the same time. We recommend the use of suitable couplings (see page G1, Accessories).

We reserve the right to make technical alterations without prior notice.

Absolute, Multiturn Type RM -101 (Shaft) / RM-102 (Blind Holllow Shaft) SAE J1939



Bearing-Lock | High rotational speed | Temperature range | High IP | High shaft load capacity | Shock/vibration resistant | Reverse polarity protection | Surface protection salt spray-tested optional | Energy Harvesting

Reliable

- Sturdy bearing construction in Bearing-Lock design for resistance against vibration and installation errors.
- Without gear and without battery, thanks to the Energy Harvesting technology.



Absolute

SAE J1939

Insensitive

- Reduced number of components ensures magnetic insensitivity.
- IP67 protection and wide temperature range -40 °C to +85 °C.

Up-To-The-Minute Fieldbus Performance

- SAE J1939 with CAN-highspeed to ISO 11898.
- Variable PDO mapping in the memory.
- Universal scaling function.
- Fast determination of the operating status via two-color LED.

Mechanical Characteristics:

Max. speed:	
Shaft or blind hollow shaft version:	6000 RPM
Without shaft seal (IP65):	3000 RPM (continuous)
Shaft or blind hollow shaft version:	4000 RPM
With shaft seal (IP67):	2000 RPM (continuous)
Starting torque (68 °F | 20 °C):	
Without shaft seal (IP65):	< 1.0 oz - in (0.007 Nm)
With shaft seal (IP67):	< 1.4 oz - in (0.01 Nm)
Shaft load capacity:	
Radial:	9.0 lbs (40 N)
Axial:	4.5 lbs (20 N)
Weight:	approx. 0.44 lbs (0.2 kg)
Protection acc. to EN 60529:	IP65 / IP67
Working temperature range:	–40 to +185 °F (–40 to +85 °C)
Materials:	
Shaft / Hollow shaft:	stainless steel
Flange:	aluminium
Housing:	zinc die-cast
Cable:	PVC
Shock resistance acc. to EN 60068-2-27:	250 g (2,500 m/s²), 6 ms
Vibration resistance acc. to EN 60068-2-6:	30 g (300 m/s²), 10 - 2,000 Hz

We reserve the right to make technical alterations without prior notice.

Absolute, Multiturn Type RM -101 (Shaft) / RM-102 (Blind Holllow Shaft) SAE J1939

General Electrical Characteristics:

Sensor:	
Power supply:	10 - 30 VDC
Current consumption (no load):	max. 30 mA
Reverse polarity protection at power supply (+V):	yes
Short-circuit protected outputs:	yes[1)]
UL approval:	file E356899
CE compliant acc. to:	EMC guideline 2014/30/EU RoHS guideline 2011/65/EU

Interface Characteristics SAE J1939:

Resolution singleturn:	1 - 16384 (14 bit), scalable default: 16384 (14 bit)
Absolute accuracy[2)]:	±1 °
Repeat accuracy:	±0.2 °
Number of revolutions (multiturn):	max. 536,870,912 (29 bit) scalable only via the total resolution
Total resolution:	1...8,796,093,022,208 (43 bit), scalable default: 4,294,967,296 (32 bit)
Interface:	CAN high-speed acc. to ISO 11898, Basic- and Full-CAN, CAN specification 2.0 B
Protocol:	SAE J1939
Power-ON time:	< 1200 ms
Baud rate:	250 kbit/s switchable by software to 500 kbit/s
Node address:	software configurable
Termination:	software configurable

[1)] = short circuit protected to **0**v of to output when power supply currently applied
[2)] = over the entire temperature range

General Information about SAE J1939

The protocol J1939 originates from the international Society of Automotive Engineers (SAE) and operates on the physical layer with high speed CAN as per ISO11898. The application emphasis lies in the area of the power train and chassis of commercial vehicles. It serves to transfer diagnostic data (for example, motor speed, position, temperature) and control information. Turck SAE J1939 encoders support the total functionality of J1939.

This protocol is a multimaster system with decentralized network management that does not involve channel-based communication.

It supports up to 254 logic nodes and 30 physical control devices per segment. The information is described as parameters (signals) and combined on 4 memory pages (data pages) into parameter groups (PGs). Each parameter group can be identified via a unique number, the parameter group number (PGN). Independently of this, each signal is assigned a unique SPN (suspect parameter number).

The major part of the communication occurs cyclically and can be received by all control devices without the explicit request for data (Broadcast). Furthermore the parameter groups are optimized to a length of 8 data bytes. This enables very efficient utilization of the CAN protocol. If greater amounts of data need to be transferred, then transport protocols (TP) can be used: BAM (broadcast announce message) and CMDT (connection mode data transfer). With BAM TP the transfer of data occurs as a broadcast.

Encoder implementation SAE J1939

- PGNs that are adaptable to the customer's application.
- Resolution of address conflicts -> Address Claiming (ACL).
- Continuous checking whether control addresses have been assigned twice within a network.
- Change of control device addresses during run-time.
- Unique identification of a control device with the help of a name that is unique worldwide. This name serves to identify the functionality of a control device in the network.
- Predefined PGs for position, speed and alarm.
- 250 kbit/s, 29 bit identifier.
- Watchdog controlled device.
- A two-color LED, located on the rear of the encoder, signals the operating and fault status of the J1939 protocol, as well as the status of the internal sensor diagnostics.

Wiring Diagram:

Male Encoder View

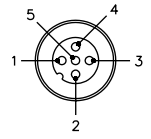

Mating Cordset[1)]:
RKC 572-*M/S3117

* Length in meters.
[1)] See Connectivity section H for corresponding cable color code.

Standard Wiring:

Connection Type:	+V	Common (0 V)	CAN GND	CAN High	CAN Low
Cable:	BN	WH	GY	GN	YE
M12 Eurofast:	2	3	1	4	5

We reserve the right to make technical alterations without prior notice.

Turck Inc. | 3000 Campus Drive, Minneapolis, MN 55441 | T +1 800 544 7769 | F +1 763 553 0708 | www.turck.com

Absolute, Multiturn Type RM -101 (Shaft) / RM-102 (Blind Holllow Shaft) SAE J1939

Part Number Key: RM-101 Shaft Version

A	B	C		D		E
RM-101S	6	C	-	9F43B	-	H1151

A	Type
RM-101S	Ø 39 mm, Shaft w/ Flat, IP67 Shaft Seal
RM-101T	Ø 39 mm, Shaft w/ Flat, IP65 Shaft Seal

B	Shaft (Ø × L)
6	Ø 6 mm × 12.5 mm
8	Ø 8 mm × 15 mm
10	Ø 10 mm × 20 mm
A0	Ø 1/4" × 1/2"

C	Flange
C	Ø 36 mm Clamping Flange
S	Ø 36 mm Servo Flange

D	Voltage Supply and Output Type
9F43B	10 - 30 VDC, SAE J1939

E	Type of Connection
H1151	Radial 5-pin M12 Eurofast Connector
H1451	Axial 5-pin M12 Eurofast Connector
C1M	Radial Cable (1 m PVC)
CA1M	Radial Cable (1 m PVC)

Part Number Key: RM-102 Blind Hollow Shaft Version

A	B	C		D		E
RM-102B	6	E	-	9F43B	-	H1151

A	Type
RM-102B	Ø 39 mm, Blind Hollow Shaft, IP67 Shaft Seal
RM-102C	Ø 39 mm, Blind Hollow Shaft, IP65 Shaft Seal

B	Bore (18.5 mm insertion depth)
6	Ø 6 mm
8	Ø 8 mm
10	Ø 10 mm
A0	Ø 1/4"

C	Flange
E	Ø 46 mm Flange w/ Slotted Flex Mount
T	Flange w/ Long Torque Stop

D	Voltage Supply and Output Type
9F43B	10 - 30 VDC, SAE J1939

E	Type of Connection
H1151	Radial 5-pin M12 Eurofast Connector
H1451	Axial 5-pin M12 Eurofast Connector
C1M	Radial Cable (1 m PVC)
CA1M	Radial Cable (1 m PVC)

We reserve the right to make technical alterations without prior notice.

Absolute, Multiturn Type RM -101 (Shaft) / RM-102 (Blind Holllow Shaft) SAE J1939

Dimensions: RM-101 Shaft Version

RM-101 Flange C
Connection H1151 & H1451

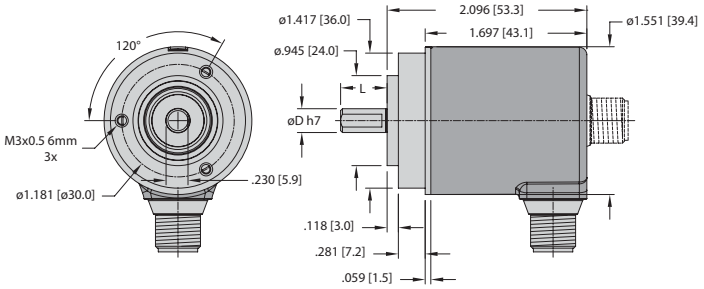

RM-101 Flange S
Connection C1M & CA1M

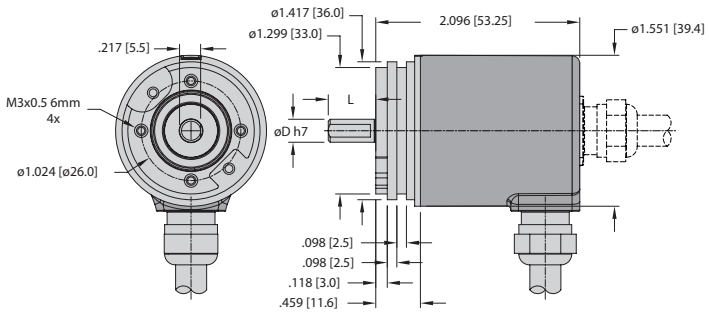

Dimensions: RM-102 Blind Hollow Shaft Version

RM-102 Flange T
Connection C1M & CA1M

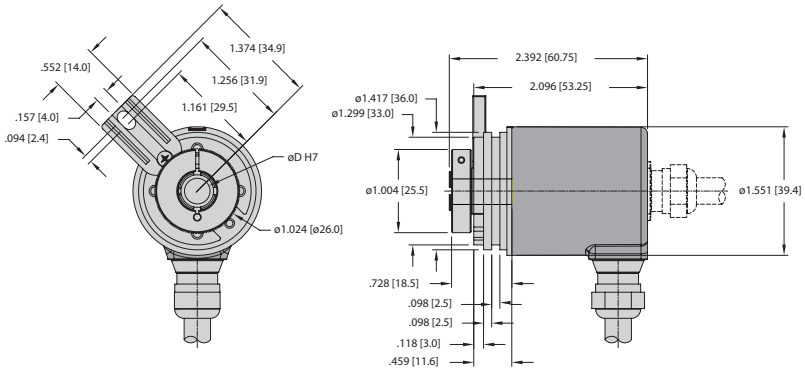

RM-102 Flange E
Connection H1151 & H1451

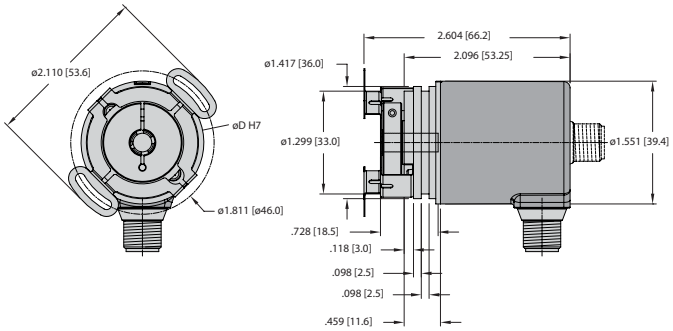

Mounting Advice:
The flanges and shafts of the encoder and drive should not be rigidly coupled together at the same time. We recommend the use of suitable couplings (see page G1, Accessories).

We reserve the right to make technical alterations without prior notice.

Absolute, Multiturn Type RM-115 Series — Analog

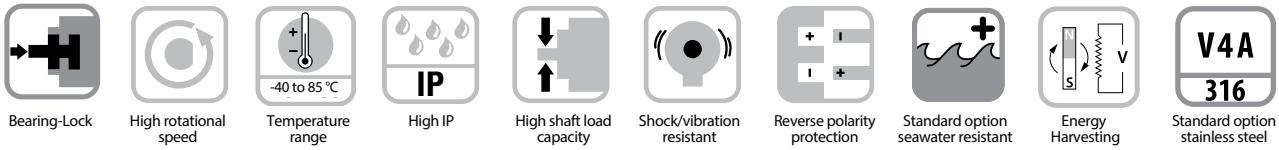

Bearing-Lock | High rotational speed | Temperature range | High IP | High shaft load capacity | Shock/vibration resistant | Reverse polarity protection | Standard option seawater resistant | Energy Harvesting | Standard option stainless steel

Highest Robustness

- Sturdy bearing construction in Bearing-Lock design for particularly high resistance.
- Extra large bearings.
- Mechanically protected shaft seal.
- Protection level IP66, IP67 and IP69k in one device.
- Wide temperature range –40 °C to +85 °C.
- Without gear and without battery, thanks to the Energy Harvesting technology.



Absolute

Compact

- Can be used where space is tight: overall diameter is 36 mm.

Application Oriented

- Current output 4 - 20 mA.
- Voltage output 0 - 10 V or 0 - 5 V.
- Measuring range scalable.
- Limit switch function.

Mechanical Characteristics:

Max. speed:	4000 RPM 2000 RPM (continous)	
Starting torque (68 °F | 20 °C):	< 1.4 oz - in (0.01 Nm)	
Shaft load capacity: Radial: Axial:	 18 lbs (80 N) 9 lbs (40 N)	
Weight:	approx. 0.44 lbs (0.2 kgs)	
Protection acc. to EN 60529/ DIN 40050-9:	IP66, IP67, IP69k	
Working temperature range:	–40 to +185 °F (–40 to +85 °C)	
Materials: Shaft: Flange: Housing: Cable:	Standard stainless steel: V2A(304) aluminum zinc die-cast PVC	/N72 (stainless steel) V4A (316) V4A (316) V4A (316) —
Shock resistance acc. to EN 60068-2-27:	500 g (5000 m/s²), 4 ms	
Vibration resistance acc. to EN 60068-2-6:	30g (300 m/s²), 10 - 2000 Hz	

We reserve the right to make technical alterations without prior notice.

Absolute, Multiturn Type RM-115 Series — Analog

Electrical Characteristics Current Interface 4 - 20mA:

Power supply:	10 - 30 VDC
Current consumption (no load):	max. 30 mA
Reverse polarity protection at power supply (+V):	yes
Short-circuit protected outputs:	yes[1)]
Measuring range: factory setting: Optionally scalable:	2^4 revolutions up to 2^{16} revolutions
DA converter resolution:	12 bit
Singleturn accuracy, at 77 °F | 25 °C:	±1 °
Temperature coefficient:	< 100 ppm/K
Repeat accuracy at 77 °F | 25 °C:	±0.2 °
Output load:	max. 200 0hm at 10 VDC max. 900 0hm at 24 VDC max. 1200 0hm at 30 VDC
Setting time:	< 1 ms, R_{Load} = 900 0hm, 77 °F | 25 °C
LEDs (green/red):	• system status • current loop interruption— input load too high • reference point display (only with factory settings) at cw: betw. 0 ° and 1 ° at ccw: betw. 0 ° and –1 ° • status in teach mode
Options:	• output signal scalable via the teach inputs • output signal scalable via the teach inputs + limit switch function
Teach inputs:	level= +V for 1 s minimum
PowerON time:	< 1 s
Update rate:	1 ms
e1 compliant acc. to (pending):	EU guideline 2009/19/EC (acc. to EN 55025, ISO 11452 and ISO 7637)
UL approval:	file E356899
CE compliant acc. to:	EMC guideline 2014/30/EU RoHS guideline 2011/65/EU

Characteristics Voltage Interface 0 - 10 V / 0 - 5 V:

Power supply:	output 0 - 5 V 10 - 30 VDC output 0 - 10 V 15 - 30 VDC
Current consumption (no load):	max. 30 mA
Reverse polarity protection at power supply (+V):	yes
Short-circuit protected outputs:	yes[1)]
Measuring range: factory setting: Optionally scalable:	2^4 revolutions up to 2^{16} revolutions
DA converter resolution:	0 - 10 V 12 bit 0 - 5 V 11 bit
Singleturn accuracy, at 25°C | 77°F:	±1 °
Temperature coefficient:	< 100 ppm/K
Repeat accuracy at 25°C | 77°F:	±0.2 °
Current output:	max. 10 mA
Setting time:	< 1 ms, R_{Load} = 1000 0hm, 77 °F | 25 °C
LEDs (green/red):	• system status • reference point display (only with factory settings) at cw: betw. 0 ° and 1 ° at ccw: betw. 0 ° and –1 ° • status in teach mode
Options:	• output signal scalable via the teach inputs • output signal scalable via the teach inputs + limit switch function
Teach inputs:	level= +V for 1 s minimum
PowerON time:	< 1 s
Update rate:	1 ms
e1 compliant acc. to (pending):	EU guideline 2009/19/EC (acc. to EN 55025, ISO 11452 and ISO 7637)
UL approval:	file E356899
CE compliant acc. to:	EMC guideline 2014/30/EU RoHS guideline 2011/65/EU

[1)] = when the power supply is correctly applied.

We reserve the right to make technical alterations without prior notice.

Measuring Range 'AL' or 'AR':

Connection Type:	Common (0 V)	+V	Output	Set 1	Set 2
Cable:	BU	BN	WH	N/C	N/C
M12 pin:	3	1	2	N/C	N/C

Measuring Range 'S*NS' or 'S*WL':

Connection Type:	Common (0 V)	+V	Output	Set 1	Set 2
Cable:	BU	BN	WH	BK	GY
M12 pin:	3	1	2	4	5

Wiring Diagram:

5-pin M12 Eurofast Connection

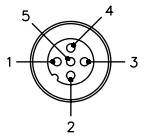

Mating Cordset: **RKC 4.5T-*/S618**
Teaching Adapter: **VB2-SP6**

Absolute, Multiturn Type RM-115 Series — Analog

Note: Encoders must be ordered with a clockwise or counterclockwise profile. This determines whether the analog output increases or decreases in the given direction.

Example (output signal profile):

version 4 - 20 mA
version 0 - 10 V
version 0 - 5 V

Clockwise (CW) version

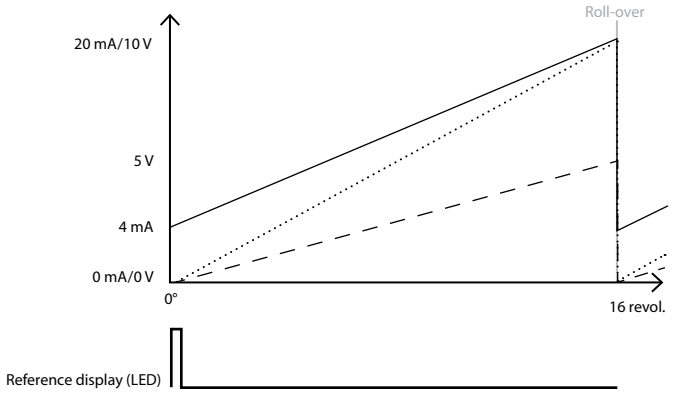

Scalable version without limit switch function

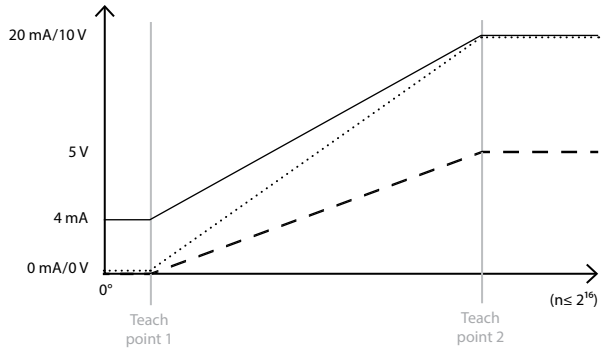

no reference point display (LED)

Example (output signal profile):

version 4 - 20 mA
version 0 - 10 V
version 0 - 5 V

Counter clockwise (CCW) version

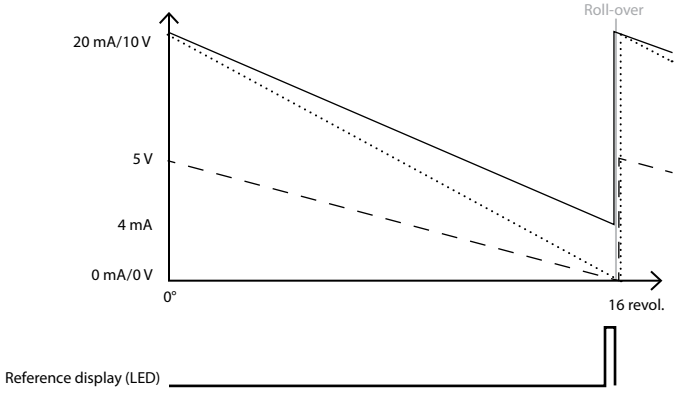

Scalable version with limit switch function

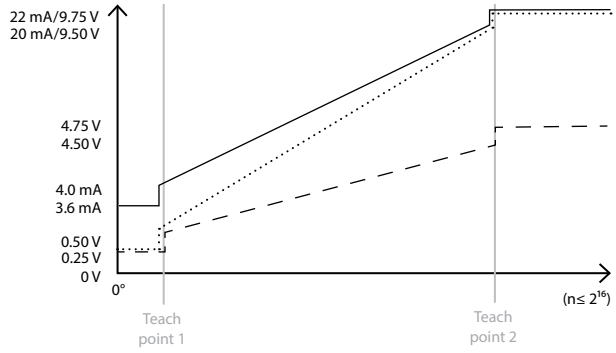

no reference point display

Note: Factory-set measuring range: 2^4 revolutions with roll-over

Note: Limit switch function:

version:	0 - 10 V	0 - 5 V	4 - 20 mA
limit switch low:	0.25 V	0.25 V	3.60 mA
limit switch high:	9.75 V	4.75 V	22.00 mA

We reserve the right to make technical alterations without prior notice.

Absolute, Multiturn Type RM-115 Series — Analog

Part Number Key: RM-115 Shaft Version

A	B	C		D	E		F		G
RM-115S	6	C	-	7A	AL	-	H1151	/	

A	Type
RM-115S	Ø 39 mm, Shaft w/Flat, IP69K Shaft Seal

B	Shaft (Ø × L)
6	Ø 6 mm × 12.5 mm
8	Ø 8 mm × 15 mm
10	Ø 10 mm × 20 mm
A0	Ø 1/4" × 1/2"

C	Flange
C	Ø 42 mm Clamping Flange

D	Voltage Supply and Output Type
7A	10 - 30 VDC, 4 - 20 mA
8B	15 - 30 VDC, 0 - 10 V
BA	10 - 30 VDC, 0 - 5 V

E	Measuring Range
AL	16 Turns, Count Direction CCW*
AR	16 Turns, Count Direction CW*
SALNS	Scalable to 65,536 Turns, CCW*, w/o Limit Switch
SALWL	Scalable to 65,536 Turns, CCW*, w/ Limit Switch
SARNS	Scalable to 65,536 Turns, CW*, w/o Limit Switch
SARWL	Scalable to 65,536 Turns, CW*, w/ Limit Switch

* = increasing code values when shaft turning in direction listed. Top view on shaft.

F	Type of Connection
H1151	Radial 5-pin M12 Eurofast Connector
C1M	Radial Cable (1m PVC)

G	Options
(Blank)	No Options
N72	All Exposed Materials 316SST[1]

[1] = only available with shaft '10' and connection 'H1151'

We reserve the right to make technical alterations without prior notice.

Turck Inc. | 3000 Campus Drive, Minneapolis, MN 55441 | T +1 800 544 7769 | F +1 763 553 0708 | www.turck.com

Absolute, Multiturn Type RM-115 Series — Analog

Dimensions: RM-115 Shaft Version

RM-115 Flange C
Connection H1151

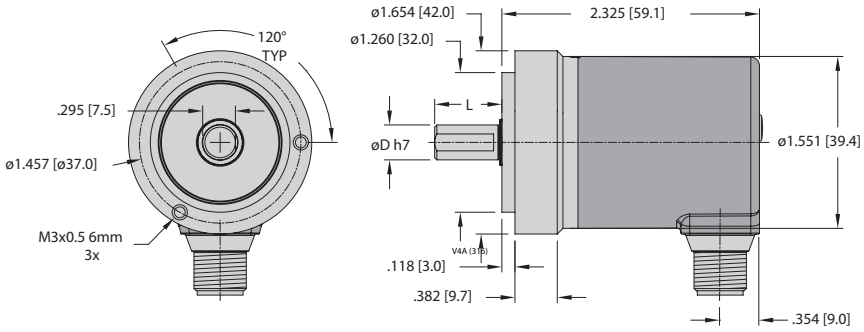

RM-115 /N72 Flange C
Connection H1151

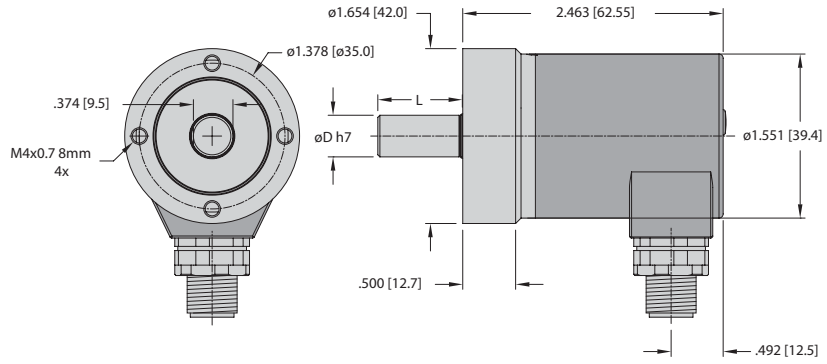

Mounting advice:
The flanges and shafts of the encoder and drive should not be rigidly coupled together at the same time. We recommend the use of suitable couplings (see page G1, Accessories).

We reserve the right to make technical alterations without prior notice.

Absolute, Multiturn Type RM-117 SSI

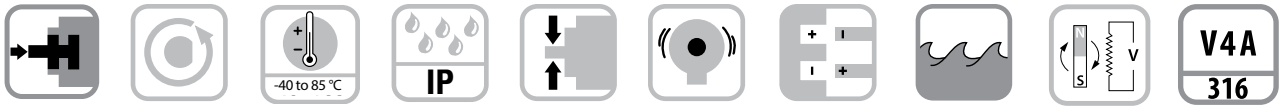

Bearing-Lock | High rotational speed | Temperature range | High IP | High shaft load capacity | Shock/vibration resistant | Reverse polarity protection | Sureface protection Salt spray-tested optional | Energy harvesting | Standard option stainless steel

High Robustness

- Sturdy bearing construction in Bearing-Lock design for particularly high resistance.
- Extra large bearings.
- Mechanically protected shaft seal.
- Protection level IP66, IP67 and IP69k in one device.
- Wide temperature range –40 °C to +85 °C.
- Without gear and without battery, thanks to the Energy Harvesting technology.



Absolute

Compact

- Can be used where space is tight: overall diameter is 39 mm.

Application Oriented

- Absolute accuracy ±1 °.
- Repeat accuracy ±0.2 °.
- Short control cycles, clock frequency with SSI up to 2 MHz.
- Max. resolution 38 bit (14 bit ST + 24 bit MT).

Mechanical Characteristics:

Max. speed:	4000 RPM 2000 RPM (continous)	
Starting torque (68 °F | 20 °C):	< 1.4 oz - in (0.01 Nm)	
Shaft load capacity: Radial: Axial:	 18 lbs (80 N) 9 lbs (40 N)	
Weight:	approx. 0.44 lbs (0.2 kgs)	
Protection acc. to EN 60529:	IP66, IP67, IP69K	
Working temperature:	–40 to +185 °F (–40 to +85 °C)	
Materials: Shaft: Flange: Housing: Cable:	Standard stainless steel: V2A (304) aluminum zinc die-cast PUR	/N72 (stainless steel) V4A (316) V4A (316) V4A (316) —
Shock resistance acc. to EN 60068-2-27:	500 g (5000 m/s²) 4 ms	
Vibration resistance acc. to EN 60068-2-6:	30 g (300 m/s²), 10 - 2000 Hz	

We reserve the right to make technical alterations without prior notice.

Turck Inc. | 3000 Campus Drive, Minneapolis, MN 55441 | T +1 800 544 7769 | F +1 763 553 0708 | www.turck.com

Absolute, Multiturn Type RM-117 — SSI

General Electrical Characteristics:

Power supply	10 - 30 VDC
Current consumption (no load):	max. 30 mA,
Reverse polarity protection at power supply (+V):	yes
Short-circuit protected outputs:	yes[1)]
e1 compliant acc. to (pending):	EU guideline 2009/19/EC (acc. to EN 55025, ISO 11452 and ISO 7637)
UL approval:	file E356899
CE compliant acc. to:	EMC guideline 2014/30/EU RoHS guideline 2011/65/EU

Interface Characteristics SSI:

Output driver:	RS485 transceiver type
Permissible load / channel:	max +/– 30 mA
Signal high:	typ 3.8 V
Signal level low with I_{Load} = 20 mA:	typ 1.3 V
Resolution singleturn:	10 - 14 bit
Absolute accuracy [2)]:	±1 °
Repeat accuracy:	±0.2 °
Number of revolutions (multiturn):	max 24 bit
Code:	binary or gray
SSI clock rate:	50 kHz - 2 MHz
Data refresh rate:	2 ms
Monoflop time:	≤ 15 µs

Note: If the clock cycle starts within the monoflop time a second data transfer begins with the same data. If the clock cycle starts after the monoflop time the cycle begins with the new values. The update rate is dependent on the clock speed, data length and monoflop time.

SET Input:

Input characteristics:	active HIGH
Input type:	comparator
Signal level high:	min. 60% of +V (power supply), max: +V
Signal level low:	max. 30% of +V (power supply)
Input current:	< 0.5 mA
Min. pulse duration (SET):	10 ms
Input delay:	1 ms
New position data readable after:	1 ms
Internal processing time:	200 ms

The encoder can be set to zero at any position by means of a HIGH signal on the SET input. Other preset values can be factory-programmed. The SET input has a signal processing time of approx. 1 ms, after which the new position data can be read via SSI or BiSS. Once the SET function has been triggered, the encoder requires an internal processing time of typ. 200 ms; during this time the power supply must not be switched off.

The SET function should be carried out while the encoder is at rest.

If this input is not used, it should be connected to 0 V (Encoder ground GND)in order to avoid interferences.

DIR Input:

Direction input: A HIGH signal switches the direction of rotation from the default cw to ccw. This inverted function can also be factory-programmed.

If this input is not used, it should be connected to 0 V (Encoder ground GND)in order to avoid interferences.

Response time (DIR input)	1ms

Power-On Delay:

After Power-ON the device requires a time of approx. 150 ms before valid data can be read.

Hot plugging of the encoder should be avoided.

[1)] = short circuit protected to **0**v or to output when power supply correctly applied.
[2)] = over the entire temperature range.

We reserve the right to make technical alterations without prior notice.

Connection Type:	GND (0 V)	V+	+Clock	–Clock	+Data	– Data	SET	DIR	PE
Cable:	WH	BN	GN	YE	GY	PK	BU	RD	Shield
M12 pin:	1	2	3	4	5	6	7	8	PH

Wiring Diagrams:

Male Encoder View

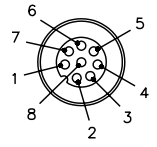

Mating Cordset:
E-RKC 8T-264-*

* Length in meters.

Absolute, Multiturn Type RM-117 SSI

Part Number Key: RM-117 Shaft Version

A	B	C		D	E1	E2		F		G
RM-117S	6	C	-	3C	10S	12M	-	H1181	/	

A	Type
RM-117S	Ø 39 mm, Shaft w/ Flat, IP69K Shaft Seal

B	Shaft (Ø x L)
6	Ø 6 mm x 12.5 mm
8	Ø 8 mm x 15 mm
10	Ø 10 mm x 20 mm
A0	Ø 1/4" x 1/2"

C	Flange
C	Ø 42 mm Clamping Flange

D	Voltage Supply and Output Type
3C	10 - 30VDC, SSI (Gray Code)
5C	10 - 30VDC, SSI (Binary Code)

E1	Resolution (singleturn)
10S	10 bit
12S	12 bit
13S	13 bit
14S	14 bit

E2	Resolution (multiturn)
12M	12 bit
16M	16 bit
20M	20 bit
24M	24 bit

F	Type of Connection
H1181	Radial 8-pin M12 Eurofast Connector
C1M	Radial Cable (1 m PUR)

G	Options
(BLANK)	No Options
N72	All Exposed Materials 316SST[1]

[1] = only available with shaft '10' and connection 'H1181'

We reserve the right to make technical alterations without prior notice.

Turck Inc. | 3000 Campus Drive, Minneapolis, MN 55441 | T +1 800 544 7769 | F +1 763 553 0708 | www.turck.com

Absolute, Multiturn Type RM-117 SSI

Dimensions: RM-117 Shaft Version

RM-117 Flange C
Connection H1181

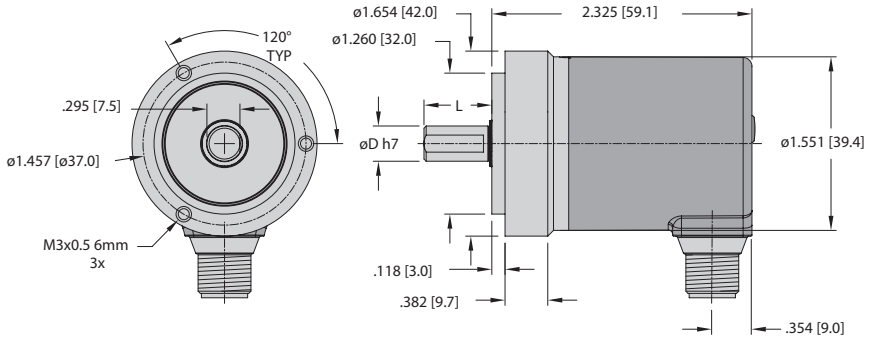

RM-117 /N72 Flange C
Connection H1181

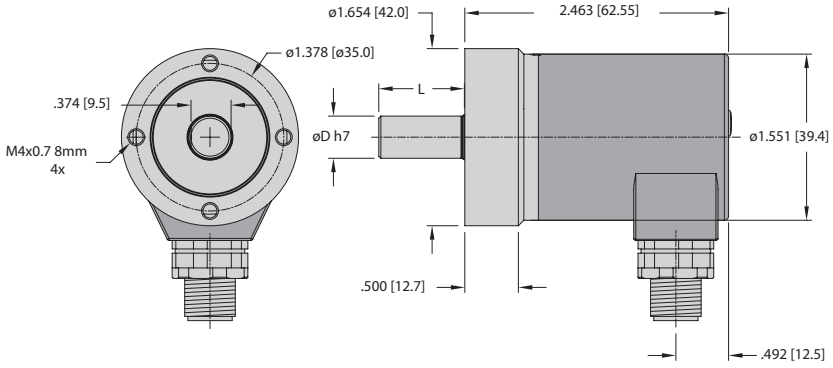

Mounting Advice:
The flanges and shafts of the encoder and drive should not be rigidly coupled together at the same time. We recommend the use of suitable couplings (see page G1, Accessories).

We reserve the right to make technical alterations without prior notice.

Absolute, Multiturn Type RM-109 — CANopen



Bearing-Lock | High rotational speed | Temperature range | High IP | High shaft load capacity | Shock/vibration resistant | Reverse polarity protection | Standard option seawater resistantl | Energy Harvesting | Standard option stainless steel

Highest Robustness

- Sturdy bearing construction in Bearing-Lock design for particularly high resistance.
- Extra large bearings.
- Mechanically protected shaft seal.
- Protection level IP66, IP67 and IP69k in one device.
- Wide temperature range –40 °C to +85 °C.
- Without gear and without battery, thanks to the Energy Harvesting technology.



Absolute

CANopen

Compact

- Can be used where space is tight: overall diameter is 36 mm.

Up-To-The-Minute Fieldbus Performance

- LSS services for configuration of the node address and baud rate.
- Variable PDO mapping in the memory.
- Universal scaling function.
- Configuration management (bootloader).

Mechanical Characteristics:

Max. speed:	4000 RPM 2000 RPM (continuous)	
Starting torque (68 °F | 20 °C):	< 1.4 oz - in (0.01 Nm)	
Shaft load capacity: Radial: Axial:	 18 lbs (80 N) 9 lbs (40 N)	
Weight:	approx. 0.44 lbs (0.2 kg)	
Protection acc. to EN 60529/DIN 40050-9:	IP66, IP67, IP69K	
Working temperature range:	–40 to +185 °F (–40 to +85 °C)	
Materials: Shaft: Flange: Housing: Cable:	Standard stainless steel: V2A(304) aluminum zinc die-cast PVC	/N72 (stainless steel) V4A (316) V4A (316) V4A (316) —
Shock resistance acc. to EN 60068-2-27:	500 g (5000 m/s²), 4 ms	
Vibration resistance acc. to EN 60068-2-6:	30 g (300 m/s²), 10 - 2,000 Hz	

We reserve the right to make technical alterations without prior notice.

Turck Inc. | 3000 Campus Drive, Minneapolis, MN 55441 | T +1 800 544 7769 | F +1 763 553 0708 | www.turck.com

Absolute, Multiturn Type RM-109 — CANopen

General Electrical Characteristics:

Sensor:	
Power supply:	10 - 30 VDC
Current consumption (no load):	max. 30 mA
Reverse polarity protection at power supply (+V):	yes
Short-circuit protected outputs:	yes[1)]
e1 compliant acc. to (pending):	EU guideline 2009/19/EC (acc. to EN 55025, ISO 11452 and ISO 7637)
UL approval:	file E356899
CE compliant acc. to:	EMC guideline 2014/30/EU RoHS guideline 2011/65/EU

Interface Characteristics CANopen:

Resolution singleturn:	1 - 16384 (14 bit), scalable default: 8192 (13 bit)
Absolute accuracy[2)]:	±1 °
Repeat accuracy:	±0.2 °
Number of revolutions (multiturn):	max. 16,777,216 (24 bit) scalable only via the total resolution
Total resolution:	1 - 274,877,906,944 (38 bit), scalable default: 33,554,432 (25 bit)
Code:	binary
Interface:	CAN high-speed acc. to ISO 11898, Basic- and Full-CAN, CAN specification 2.0 B
Protocol:	CANopen profile DS406 V4.0 with manufacturer-specific add-ons, LSS-Service, bootloader
Power-ON time:	< 1200 ms
SDO timeout:	< 1000 ms
Baud rate:	10 - 1000 kbit/s software configurable
Node address:	1 - 127 software configurable
Termination:	software configurable
LSS protocol:	CIA LSS protocol DS305, global command support for node address and baud rate, selective commands via attributes of the identity object
Bootloader:	configuration management CIA DS 302-3

[1)] = short circuit protected to **0**v or to output when power supply correctly applied.
[2)] = over the entire temperature range.

General Information about CANopen

The CANopen encoders support the latest CANopen communication profile according to DS301 V4.02 . In addition, device-specific profiles like the encoder profile DS406 V3.2, DS305 (LSS) and DS302 (Bootloader) are available.

The following operating modes may be selected: Polled Mode, Cyclic Mode, Sync Mode. Moreover, scale factors, preset values, limit switch values and many other additional parameters can be programmed via the CANbus. When switching the device on, all parameters, which have been saved on a flash memory to protect them against power failure, are loaded again.

The following output values may be combined in a freely variable way as PDO(PDO mapping): **position**, **speed, acceleration** as well as the **status of the working area.**

The encoders are available with a connector or a cable connection.

The device address and baud rate can be set/ modified by means of the software.

The two-color LED located on the back indicates the operating or fault status of the CAN-bus, as well as the status of the internal diagnostics.

CANbus connection

The CANopen encoders are equipped with a bus trunk line in various lengths or a M12 connector and can be terminated in the device.

The devices do not have an integrated T-coupler nor are they looped internally and must therefore only be used as end devices.

LSS layer setting services DS305 V2.0

- Global support of node-ID and baud rate
- Selective protocol via identity object (1018h)

CANopen Communication Profile DS301 V4.2

Among others, the following functionality is integrated. (Class C2 functionality):

- NMT Slave
- Heartbeat Protocol
- Identity Object
- Error Behavior Object
- Variable PDO Mapping self-start programmable (Power on to operational), 3 Sending PDO's
- Node address, baud rate and CANbus / programmable termination

CANopen encoder profile DS406 V4.0

The following parameters can be programmed:

- Event mode, start optional
- 1 work area with upper and lower limit and the corresponding output states variable PDO mapping for position, speed, work area status, error and acceleration
- Extended failure management for position sensing
- User interface with visual display of bus and failure status 1 LED two colors
- Customer-specific protocol
- "Watchdog controlled" device

Bootloader functionality DS302-3

Configuration Management:

- Program download
- Program start
- Program erase

Standard Wiring:

Connection Type:	+V	Common (0 V)	CAN GND	CAN High	CAN Low
Cable:	BN	WH	GY	GN	YE
M12 Eurofast:	2	3	1	4	5

Wiring Diagram:

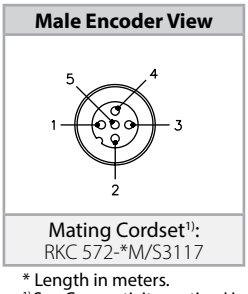

Mating Cordset[1)]:
RKC 572-*M/S3117

* Length in meters.
[1)] See Connectivity section H for corresponding cable color code.

We reserve the right to make technical alterations without prior notice.

Absolute, Multiturn Type RM-109 — CANopen

Part Number Key: RM-109 Shaft Version

A	B	C		D		E		F
RM-109S	6	C	-	9D38B	-	H1151	/	

A	Type
RM-109S	Ø 39 mm, Shaft w/ Flat, IP69K Shaft Seal

B	Shaft (Ø × L)
6	Ø 6 mm × 12.5 mm
8	Ø 8 mm × 15 mm
10	Ø 10 mm × 20 mm
A0	Ø 1/4" × 1/2"

C	Flange
C	Ø 42 mm Clamping Flange

D	Voltage Supply and Output Type
9D38B	10 - 30 VDC, CANopen DS 406 V4.0

E	Type of Connection
H1151	Radial 1 × M12 Eurofast Connector
C1M	Radial Cable (1 m PVC)

F	Options
(BLANK)	No Options
N72	All Exposed Materials 316SST[1]

[1] = only available with shaft '10' and connection 'H1151'

We reserve the right to make technical alterations without prior notice.

Turck Inc. | 3000 Campus Drive, Minneapolis, MN 55441 | T +1 800 544 7769 | F +1 763 553 0708 | www.turck.com

Absolute, Multiturn Type RM-109 — CANopen

Dimensions: RM-109 Shaft Version

RM-109 Flange C
Connection H1151

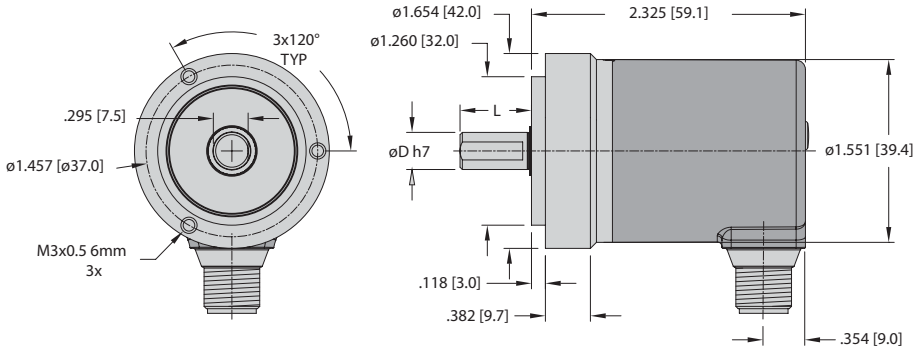

RM-109/N72 Flange C
Connection H1151

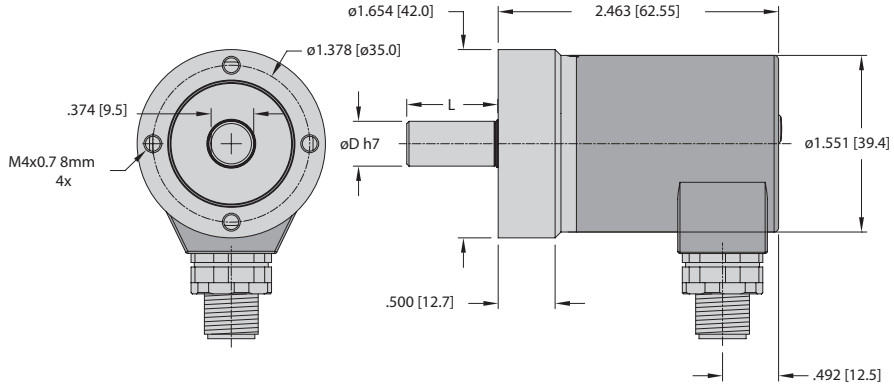

Mounting Advice:
The flanges and shafts of the encoder and drive should not be rigidly coupled together at the same time. We recommend the use of suitable couplings (see page G1, Accessories).

We reserve the right to make technical alterations without prior notice.

Rotary Position Technology
Absolute Encoders, Multiturn

Absolute, Multiturn Type RM-109 SAE J1939



Bearing-Lock | High rotational speed | Temperature range | High IP | High shaft load capacity | Shock/vibration resistant | Reverse polarity protection | Standard option seawater resistantl | Energy Harvesting | Standard option stainless steel

Highest Robustness
- Sturdy bearing construction in Bearing-Lock design for particularly high resistance.
- Extra large bearings.
- Mechanically protected shaft seal.
- Protection level IP66, IP67 and IP69k in one device.
- Wide temperature range –40 °C to +85 °C.
- Without gear and without battery, thanks to the Energy Harvesting technology.



Absolute

SAE J1939

Compact
- Can be used where space is tight: overall diameter is 36 mm.

Up-To-The-Minute Fieldbus Performance
- SAE J1939 with CAN-highspeed to ISO 11898.
- Variable PDO mapping in the memory.
- Universal scaling function.
- Fast determination of the operating status via two-color LED.

Mechanical Characteristics:

Max. speed:	4000 RPM 2000 RPM (continuous)	
Starting torque (68 °F | 20 °C):	< 1.4 oz - in (0.01 Nm)	
Shaft load capacity: Radial: Axial:	 18 lbs (80 N) 9 lbs (40 N)	
Weight:	approx. 0.44 lbs (0.2 kg)	
Protection acc. to EN 60529/DIN 40050-9:	IP66, IP67, IP69K	
Working temperature range:	–40 to +185 °F (–40 to +85 °C)	
Materials: Shaft: Flange: Housing: Cable:	Standard stainless steel: V2A(304) aluminum zinc die-cast PVC	/N72 (stainless steel) V4A (316) V4A (316) V4A (316) —
Shock resistance acc. to EN 60068-2-27:	500 g (5000 m/s²), 4 ms	
Vibration resistance acc. to EN 60068-2-6:	30 g (300 m/s²), 10 - 2,000 Hz	

We reserve the right to make technical alterations without prior notice.

Turck Inc. | 3000 Campus Drive, Minneapolis, MN 55441 | T +1 800 544 7769 | F +1 763 553 0708 | www.turck.com

Absolute, Multiturn Type RM-109 — SAE J1939

General Electrical Characteristics:

Sensor:	
Power supply:	10 - 30 VDC
Current consumption (no load):	max. 30 mA
Reverse polarity protection at power supply (+V):	yes
Short-circuit protected outputs:	yes[1)]
UL approval:	file E356899
CE compliant acc. to:	EMC guideline 2014/30/EU RoHS guideline 2011/65/EU

Interface Characteristics SAE J1939:

Resolution singleturn:	1 - 16384 (14 bit), scalable default: 16384 (14 bit)
Absolute accuracy[2)]:	±1 °
Repeat accuracy:	±0.2 °
Number of revolutions (multiturn):	max. 536,870,912 (29 bit) scalable only via the total resolution
Total resolution:	1...8,796,093,022,208 (43 bit), scalable default: 4,294,967,296 (32 bit)
Interface:	CAN high-speed acc. to ISO 11898, Basic- and Full-CAN, CAN specification 2.0 B
Protocol:	SAE J1939
Power-ON time:	< 1200 ms
Baud rate:	250 kbit/s switchable by software to 500 kbit/s
Node address:	software configurable
Termination:	software configurable

[1)] = short circuit protected to **0**v of to output when power supply currently applied
[2)] = over the entire temperature range

We reserve the right to make technical alterations without prior notice.

General Information about SAE J1939

The protocol J1939 originates from the international Society of Automotive Engineers (SAE) and operates on the physical layer with high speed CAN as per ISO11898. The application emphasis lies in the area of the power train and chassis of commercial vehicles. It serves to transfer diagnostic data (for example, motor speed, position, temperature) and control information. Turck SAE J1939 encoders support the total functionality of J1939.

This protocol is a multimaster system with decentralized network management that does not involve channel-based communication.

It supports up to 254 logic nodes and 30 physical control devices per segment. The information is described as parameters (signals) and combined on 4 memory pages (data pages) into parameter groups (PGs). Each parameter group can be identified via a unique number, the parameter group number (PGN). Independently of this, each signal is assigned a unique SPN (suspect parameter number).

The major part of the communication occurs cyclically and can be received by all control devices without the explicit request for data (Broadcast). Furthermore the parameter groups are optimized to a length of 8 data bytes. This enables very efficient utilization of the CAN protocol. If greater amounts of data need to be transferred, then transport protocols (TP) can be used: BAM (broadcast announce message) and CMDT (connection mode data transfer). With BAM TP the transfer of data occurs as a broadcast.

Encoder implementation SAE J1939

- PGNs that are adaptable to the customer's application.
- Resolution of address conflicts -> Address Claiming (ACL).
- Continuous checking whether control addresses have been assigned twice within a network.
- Change of control device addresses during run-time.
- Unique identification of a control device with the help of a name that is unique worldwide. This name serves to identify the functionality of a control device in the network.
- Predefined PGs for position, speed and alarm.
- 250 kbit/s, 29 bit identifier.
- Watchdog controlled device.
- A two-color LED, located on the rear of the encoder, signals the operating and fault status of the J1939 protocol, as well as the status of the internal sensor diagnostics.

Standard Wiring:

Connection Type:	+V	Common (0 V)	CAN GND	CAN High	CAN Low
Cable:	BN	WH	GY	GN	YE
M12 Eurofast:	2	3	1	4	5

Wiring Diagram:

Male Encoder View

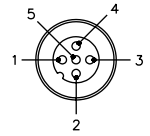

Mating Cordset[1)]:
RKC 572-*M/S3117

* Length in meters.
[1)] See Connectivity section H for corresponding cable color code.

Absolute, Multiturn Type RM-109 SAE J1939

Part Number Key: RM-109 Shaft Version

A	B	C		D		E		F
RM-109S	6	C	-	9F43B	-	H1151	/	

A	Type
RM-109S	Ø 39 mm, Shaft w/ Flat, IP69K Shaft Seal

B	Shaft (Ø × L)
6	Ø 6 mm × 12.5 mm
8	Ø 8 mm × 15 mm
10	Ø 10 mm × 20 mm
A0	Ø 1/4" × 1/2"

C	Flange
C	Ø 42 mm Clamping Flange

D	Voltage Supply and Output Type
9F43B	10 - 30 VDC, SAE J1939

E	Type of Connection
H1151	Radial 1 × M12 Eurofast Connector
C1M	Radial Cable (1 m PVC)

F	Options
(BLANK)	No Options
N72	All Exposed Materials 316SST[1]

[1] = only available with shaft '10' and connection 'H1151'

We reserve the right to make technical alterations without prior notice.

Turck Inc. | 3000 Campus Drive, Minneapolis, MN 55441 | T +1 800 544 7769 | F +1 763 553 0708 | www.turck.com

Absolute, Multiturn Type RM-109 — SAE J1939

Dimensions: RM-109 Shaft Version

RM-109 Flange C
Connection H1151

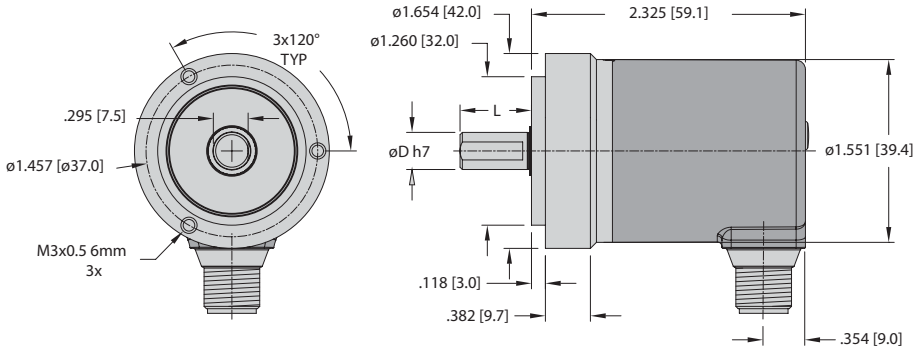

RM-109/N72 Flange C
Connection H1151

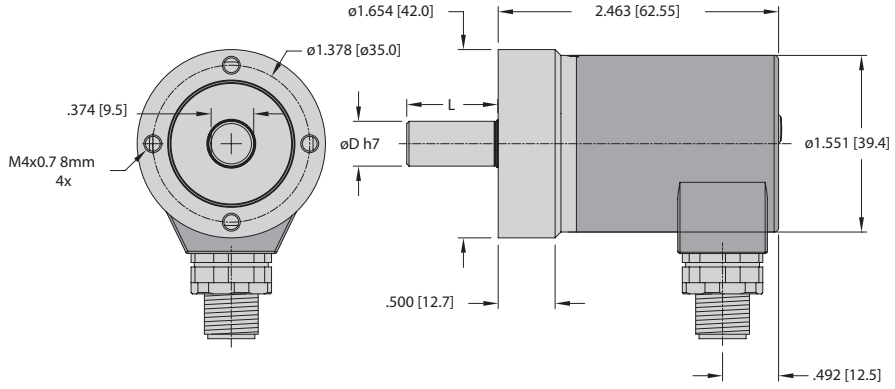

Mounting Advice:
The flanges and shafts of the encoder and drive should not be rigidly coupled together at the same time. We recommend the use of suitable couplings (see page G1, Accessories).

We reserve the right to make technical alterations without prior notice.

Rotary Position Technology
Absolute Encoders, Multiturn

Absolute, Multiturn Type RM-116 Series — Analog

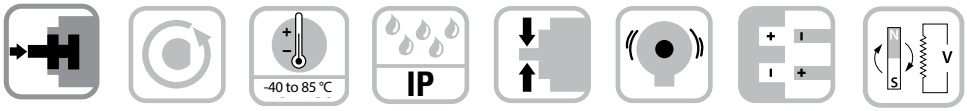

Bearing-Lock | High rotational speed | Temperature range | High IP | High shaft load capacity | Shock/vibration resistant | Reverse polarity protection | Energy harvesting

Highest Robustness
- Sturdy bearing construction in Bearing-Lock design for particularly high resistance.
- Extra large bearings.
- Mechanically protected shaft seal.
- Wide temperature range –40 °C to +85 °C.
- Without gear and without battery, thanks to the Energy Harvesting technology.



Absolute

Compact Housing
- Can be used where space is tight: 39 mm housing with 58 mm flange.

Application Oriented
- Current output 4 - 20 mA.
- Voltage output 0 - 10 V or 0 - 5 V.
- Measuring range scalable.
- Limit switch function.

Mechanical Characteristics:

Max. speed:	4000 RPM 2000 RPM (continous)
Starting torque (68 °F | 20 °C):	< 1.4 oz - in (0.01 Nm)
Shaft load capacity: Radial: Axial:	 18 lbs (80 N) 9 lbs (40 N)
Weight:	approx. 0.44 lbs (0.2 kgs)
Protection acc. to EN 60529/ DIN 40050-9:	IP65
Working temperature range:	–40 to +185 °F (–40 to +85 °C)
Materials: Shaft: Flange: Housing: Cable:	 stainless steel: V2A(304) aluminum zinc die-cast PVC
Shock resistance acc. to EN 60068-2-27:	500 g (5000 m/s²), 4 ms
Vibration resistance acc. to EN 60068-2-6:	30 g (300 m/s²), 10 - 2000 Hz

We reserve the right to make technical alterations without prior notice.

Turck Inc. | 3000 Campus Drive, Minneapolis, MN 55441 | T +1 800 544 7769 | F +1 763 553 0708 | www.turck.com

Absolute, Multiturn Type RM-116 Series — Analog

Electrical Characteristics Interface 4 - 20mA:

Power supply:	10 - 30 VDC
Current consumption (no load):	max. 30 mA
Reverse polarity protection at power supply (+V):	yes
Short-circuit protected outputs:	yes[1)]
Measuring range: Factory setting: Optionally scalable:	 2^4 revolutions up to 2^{16} revolutions
DA converter resolution:	12 bit
Singleturn accuracy, at 77 °F | 25 °C:	±1 °
Temperature coefficient:	< 100 ppm/K
Repeat accuracy at 77 °F | 25 °C:	±0.2 °
Output load:	max. 200 0hm at 10 VDC max. 900 0hm at 24 VDC max. 1200 0hm at 30 VDC
Setting time:	< 1 ms, R_{Load} = 900 0hm, 77 °F | 25 °C
LEDs (green/red):	• system status • current loop interruption— input load too high • reference point display (only with factory settings) at cw: betw. 0 ° and 1 ° at ccw: betw. 0 ° and –1 ° • status in teach mode
Options:	• output signal scalable via the teach inputs • output signal scalable via the teach inputs + limit switch function
Teach inputs:	level= +V for 1 s minimum
PowerON time:	< 1 s
Update rate:	1 ms
UL approval:	file E356899
CE compliant acc. to:	EMC guideline 2014/30/EU RoHS guideline 2011/65/EU

Characteristics Voltage Interface:

Power supply:	output 0 - 5 V 10 - 30 VDC output 0 - 10 V 15 - 30 VDC
Current consumption (no load):	max. 30 mA
Reverse polarity protection at power supply (+V):	yes
Short-circuit protected outputs:	yes[1)]
Measuring range: Factory setting: Optionally scalable:	 2^4 revolutions up to 2^{16} revolutions
DA converter resolution:	0 - 10 V 12 bit 0 - 5 V 11 bit
Singleturn accuracy, at 25°C | 77°F:	±1 °
Temperature coefficient:	< 100 ppm/K
Repeat accuracy at 25°C | 77°F:	±0.2 °
Current output:	max. 10 mA
Setting time:	< 1 ms, R_{Load} = 900 0hm, 77 °F | 25 °C
LEDs (green/red):	• system status • reference point display (only with factory settings) at cw: betw. 0 ° and 1 ° at ccw: betw. 0 ° and –1 ° • status in teach mode
Options:	• output signal scalable via the teach inputs • output signal scalable via the teach inputs + limit switch function
Teach inputs:	level= +V for 1 s minimum
PowerON time:	< 1 s
Update rate:	1 ms
UL approval:	file E356899
CE compliant acc. to:	EMC guideline 2014/30/EU RoHS guideline 2011/65/EU

[1)] = when the power supply is correctly applied.

We reserve the right to make technical alterations without prior notice.

Measuring Range 'AL' or 'AR':

Connection Type:	Common (0 V)	+V	Output	Set 1	Set 2
Cable:	BU	BN	WH	N/C	N/C
M12 pin:	3	1	2	N/C	N/C

Measuring Range 'S*NS' or 'S*WL':

Connection Type:	Common (0 V)	+V	Output	Set 1	Set 2
Cable:	BU	BN	WH	BK	GY
M12 pin:	3	1	2	4	5

Wiring Diagram:

5-pin M12 Eurofast Connection

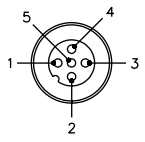

Mating Cordset: **RKC 4.5T-*/S618**
Teaching Adapter: **VB2-SP6**

Absolute, Multiturn Type RM-116 Series — Analog

Note: Encoders must be ordered with a clockwise or counterclockwise profile. This determines whether the analog output increases or decreases in the given direction.

Example (output signal profile):

version 4 - 20 mA
version 0 - 10 V
version 0 - 5 V

Clockwise (CW) version

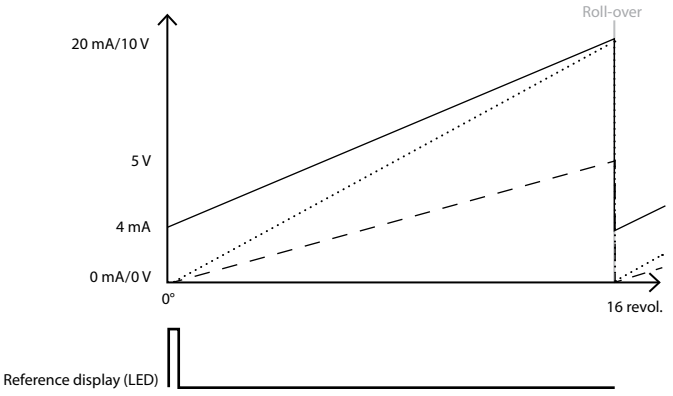

Scalable version without limit switch function

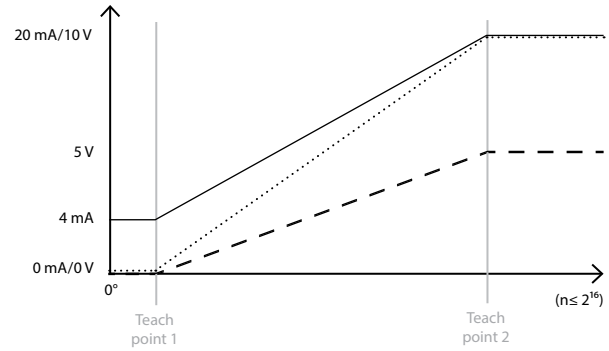

no reference point display (LED)

Example (output signal profile):

version 4 - 20 mA
version 0 - 10 V
version 0 - 5 V

Counter clockwise (CCW) version

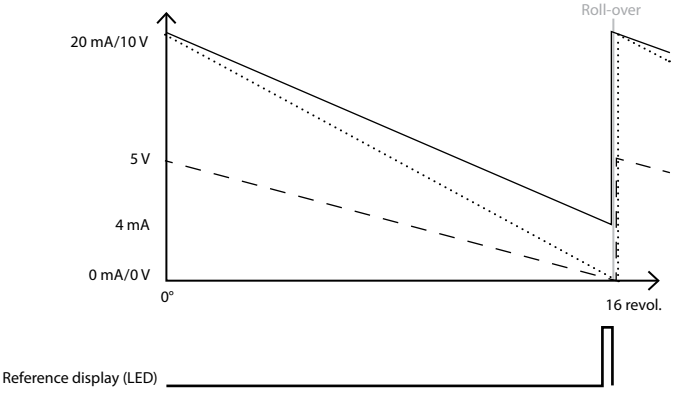

Scalable version with limit switch function

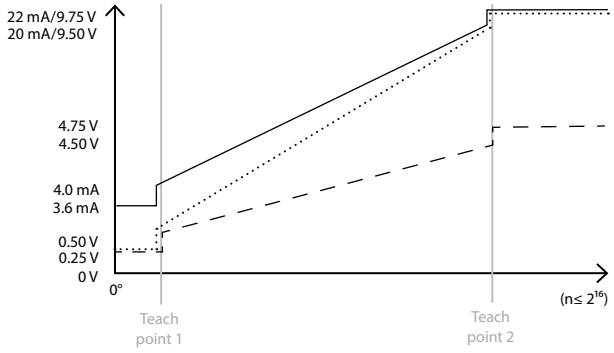

no reference point display

Note: Factory-set measuring range: 2^4 revolutions with roll-over

Note: Limit switch function:

version:	**0 - 10 V**	**0 - 5 V**	**4 - 20 mA**
limit switch low:	0.25 V	0.25 V	3.60 mA
limit switch high:	9.75 V	4.75 V	22.00 mA

We reserve the right to make technical alterations without prior notice.

Absolute, Multiturn Type RM-116 Series — Analog

Part Number Key: RM-116 Shaft Version

A	B	C		D	E		F
RM-116T	6	C	-	7A	AL	-	H1151

A	Type
RM-116T	Ø 39 mm, Shaft w/Flat, IP65 Shaft Seal

B	Shaft (Ø × L)
6	Ø 6 mm × 12.5 mm
10	Ø 10 mm × 20 mm

C	Flange
C	Ø 58 mm Clamping Flange
S	Ø 58 mm Servo Flange

D	Voltage Supply and Output Type
7A	10 - 30 VDC, 4 - 20 mA
8B	15 - 30 VDC, 0 - 10 V
BA	10 - 30 VDC, 0 - 5 V

E	Measuring Range
AL	16 Turns, Count Direction CCW*
AR	16 Turns, Count Direction CW*
SALNS	Scalable to 65,536 Turns, CCW*, w/o Limit Switch
SALWL	Scalable to 65,536 Turns, CCW*, w/ Limit Switch
SARNS	Scalable to 65,536 Turns, CW*, w/o Limit Switch
SARWL	Scalable to 65,536 Turns, CW*, w/ Limit Switch

* = increasing code values when shaft turning in direction listed. Top view on shaft.

F	Type of Connection
H1151	Radial 5-pin M12 Eurofast Connector
C1M	Radial Cable (1m PVC)

We reserve the right to make technical alterations without prior notice.

Absolute, Multiturn Type RM-116 Series — Analog

Dimensions: RM-116 Shaft Version

RM-116 Flange C
Connection H1151

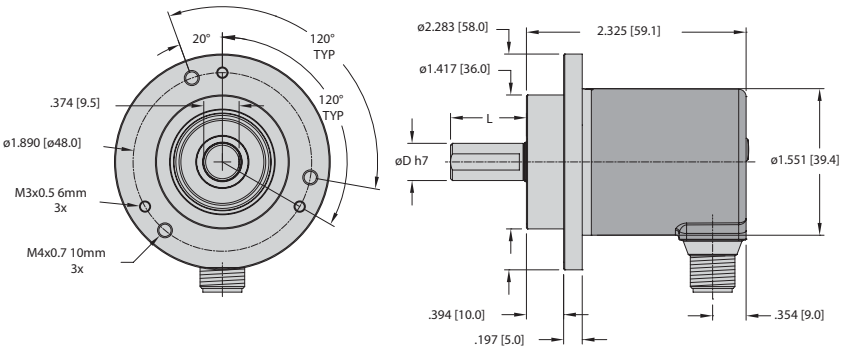

RM-116 Flange S
Connection C1M

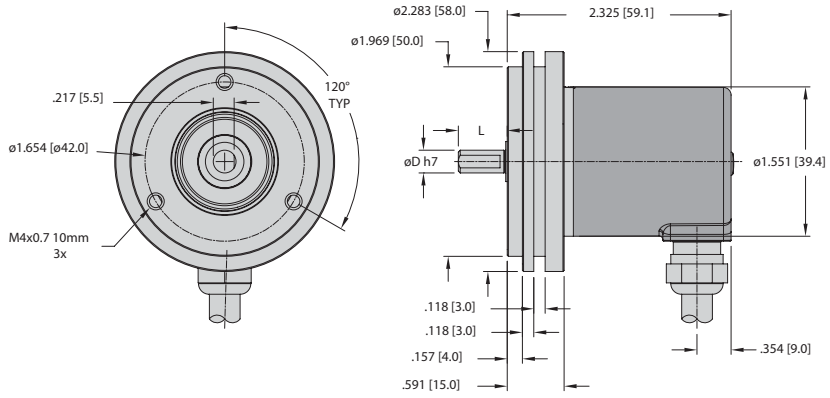

Mounting advice:
The flanges and shafts of the encoder and drive should not be rigidly coupled together at the same time. We recommend the use of suitable couplings (see page G1, Accessories).

We reserve the right to make technical alterations without prior notice.

Turck Inc. | 3000 Campus Drive, Minneapolis, MN 55441 | T +1 800 544 7769 | F +1 763 553 0708 | www.turck.com

Absolute, Multiturn Type RM-118 SSI

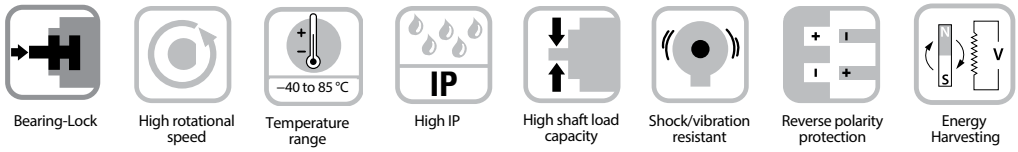

Bearing-Lock | High rotational speed | Temperature range | High IP | High shaft load capacity | Shock/vibration resistant | Reverse polarity protection | Energy Harvesting

High Robustness

- Sturdy bearing construction in Bearing-Lock design for particularly high resistance.
- Extra large bearings.
- Mechanically protected shaft seal.
- Wide temperature range –40 to +85 °C.
- Without gear and without battery, thanks to the Energy Harvesting technology..



Absolute

Compact Housing

- Can be used where space is tight: 39 mm housing with 58 mm flange

Application Oriented

- Absolute accuracy ±1 °.
- Repeat accuracy ±0.2 °.
- Short control cycles, clock frequency with SSI up to 2 MHz.
- Max. resolution 38 bit (14 bit ST + 24 bit MT).

Mechanical Characteristics:

Max. speed:	4000 RPM 2000 RPM (continuous)
Starting torque (68 °F | 20 °C):	< 1.4 oz - in (0.01 Nm)
Shaft load capacity: Radial: Axial:	 18 lbs (80 N) 9 lbs (40 N)
Weight:	approx. 0.44 lbs (0.2 kg)
Protection acc. to EN 60529:	IP65
Working temperature:	–40 to +185 °F (–40 to +85 °C)
Materials: Shaft: Flange: Housing: Cable:	 stainless steel: V2A(304) aluminum zinc die-cast PUR
Shock resistance acc. to EN 60068-2-27:	500g (5000 m/s²), 4 ms
Vibration resistance acc. to EN 60068-2-6:	30g (300 m/s²), 10 - 2000 Hz

We reserve the right to make technical alterations without prior notice.

Absolute, Multiturn Type RM-118 — SSI

General Electrical Characteristics:

Power supply	10 - 30 VDC
Current consumption (no load):	max. 30 mA,
Reverse polarity protection at power supply (+V):	yes
Short-circuit protected outputs:	yes[1)]
UL approval:	file E356899
CE compliant acc. to:	EMC guideline 2014/30/EU RoHS guideline 2011/65/EU

Interface Characteristics SSI:

Output driver:	RS485 transceiver type
Permissible load / channel:	max +/– 30 mA
Signal high:	typ 3.8 V
Signal level low with I_{Load} = 20 mA:	typ 1.3 V
Resolution singleturn:	10 - 14 bit
Absolute accuracy [2)]:	±1 °
Repeat accuracy:	±0.2 °
Number of revolutions (multiturn):	max 24 bit
Code:	binary or gray
SSI clock rate:	50 kHz - 2 MHz
Data refresh rate:	2 ms
Monoflop time:	≤ 15 µs

Note: If the clock cycle starts within the monoflop time a second data transfer begins with the same data. If the clock cycle starts after the monoflop time the cycle begins with the new values. The update rate is dependent on the clock speed, data length and monoflop time.

SET Input:

Input characteristics:	active HIGH
Input type:	comparator
Signal level high:	min. 60% of +V (power supply), max: +V
Signal level low:	max. 30% of +V (power supply)
Input current:	< 0.5 mA
Min. pulse duration (SET):	10 ms
Input delay:	1 ms
New position data readable after:	1 ms
Internal processing time:	200 ms

The encoder can be set to zero at any position by means of a HIGH signal on the SET input. Other preset values can be factory-programmed. The SET in put has a signal processing time of approx. 1 ms, after which the new position data can be read via SSI or BiSS. Once the SET function has been triggered, the encoder requires an internal processing time of typ. 200 ms; during this time the power supply must not be switched off.

The SET function should be carried out while the encoder is at rest.

If this input is not used, it should be connected to 0 V (Encoder ground GND)in order to avoid interferences.

DIR Input:

Direction input: A HIGH signal switches the direction of rotation from the default cw to ccw. This inverted function can also be factory-programmed.

If this input is not used, it should be connected to 0 V (Encoder ground GND)in order to avoid interferences.

Response time (DIR input)	1 ms

Power-On Delay:

After Power-ON the device requires a time of approx. 150 ms before valid data can be read.

Hot plugging of the encoder should be avoided.

[1)] = when power supply is currently applied
[2)] = over the entire temperature range

We reserve the right to make technical alterations without prior notice.

Wiring Diagrams:

Connection Type:	GND (0 V)	V+	+Clock	–Clock	+Data	– Data	SET	DIR	PE
Cable:	WH	BN	GN	YE	GY	PK	BU	RD	Shield
M12 pin:	1	2	3	4	5	6	7	8	PH

Male Encoder View

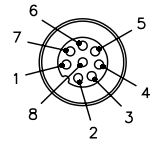

Mating Cordset:
E-RKC 8T-264-*

* Length in meters.

Turck Inc. | 3000 Campus Drive, Minneapolis, MN 55441 | T +1 800 544 7769 | F +1 763 553 0708 | www.turck.com

Absolute, Multiturn Type RM-118 SSI

Part Number Key: RM-118 Shaft Version

A	B	C		D	E1	E2		F
RM-118T	6	C	-	3C	10S	12M	-	H1181

A	Type
RM-118T	Ø 39 mm, Shaft w/ Flat, IP65 Shaft Seal

B	Shaft (Ø x L)
6	Ø 6 mm x 12.5 mm
10	Ø 10 mm x 20 mm

C	Flange
C	Ø 58 mm Clamping Flange
S	Ø 58 mm Servo Flange

D	Voltage Supply and Output Type
3C	10 - 30VDC, SSI (Gray Code)
5C	10 - 30VDC, SSI (Binary Code)

E1	Resolution (singleturn)
10S	10 bit
12S	12 bit
13S	13 bit
14S	14 bit

E2	Resolution (multiturn)
12M	12 bit
16M	16 bit
20M	20 bit
24M	24 bit

F	Type of Connection
H1181	Radial 8-pin M12 Eurofast Connector
C1M	Radial Cable (1 m PUR)

We reserve the right to make technical alterations without prior notice.

Absolute, Multiturn Type RM-118 SSI

Dimensions: RM-118 Shaft Version

RM-118 Flange C
Connection H1181

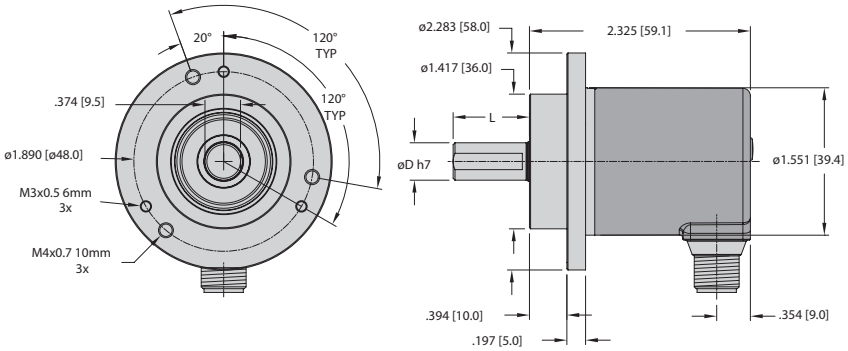

RM-118 Flange S
Connection C1M

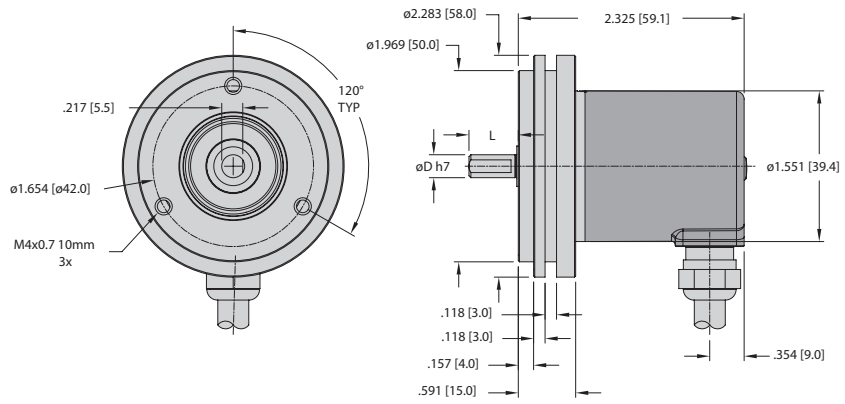

Mounting Advice:
The flanges and shafts of the encoder and drive should not be rigidly coupled together at the same time. We recommend the use of suitable couplings (see page G1, Accessories).

We reserve the right to make technical alterations without prior notice.

Absolute, Multiturn Type RM-121 — CANopen

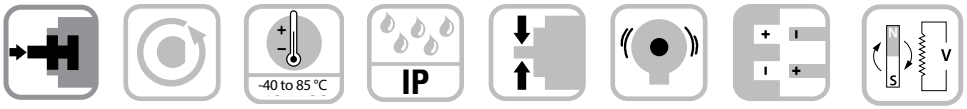

Bearing-Lock | High rotational speed | Temperature range | High IP | High shaft load capacity | Shock/vibration resistant | Reverse polarity protection | Energy Harvesting

Highest Robustness

- Sturdy bearing construction in Bearing-Lock design for particularly high resistance.
- Extra large bearings.
- Mechanically protected shaft seal.
- Wide temperature range –40 + 85 °C.
- Without gear and without battery, thanks to the Energy Harvesting technology.



Absolute

CANopen

Compact Housing

- Can be used where space is tight: 39 mm housing with 58 mm flange.

Up-To-The-Minute Fieldbus Performance

- LSS services for configuration of the node address and baud rate.
- Variable PDO mapping in the memory.
- Universal scaling function.
- Configuration management (bootloader).

Mechanical Characteristics:

Max. speed:	4000 RPM 2000 RPM (continuous)
Starting torque (68 °F | 20 °C):	< 1.4 oz - in (0.01 Nm)
Shaft load capacity: Radial: Axial:	 18 lbs (80 N) 9 lbs (40 N)
Weight:	approx. 0.44 lbs (0.2 kg)
Protection acc. to EN 60529/DIN 40050-9:	IP65
Working temperature range:	–40 to +185 °F (–40 to +85 °C)
Materials: Shaft: Flange: Housing: Cable:	 stainless steel: V2A(304) aluminum zinc die-cast PVC
Shock resistance acc. to EN 60068-2-27:	500 g (5000 m/s²), 4 ms
Vibration resistance acc. to EN 60068-2-6:	30 g (300 m/s²), 10 - 2,000 Hz

We reserve the right to make technical alterations without prior notice.

Absolute, Multiturn Type RM-121 — CANopen

General Electrical Characteristics:

Sensor:	
Power supply:	10 - 30 VDC
Current consumption (no load):	max. 30 mA
Reverse polarity protection at power supply (+V):	yes
Short-circuit protected outputs:	yes[1)]
UL approval:	file E356899
CE compliant acc. to:	EMC guideline 2014/30/EU RoHS guideline 2011/65/EU

Interface Characteristics CANopen:

Resolution singleturn:	1 - 16384 (14 bit), scalable default: 8192 (13 bit)
Absolute accuracy[2)]:	±1 °
Repeat accuracy:	±0.2 °
Number of revolutions (multiturn):	max. 16,777,216 (24 bit) scalable onl via the total resolution
Total resolution:	1…274,877,906,944 (38 bit), scalable default: 33,554,432 (25 bit)
Code:	binary
Interface:	CAN high-speed acc. to ISO 11898, Basic- and Full-CAN, CAN specification 2.0 B
Protocol:	CANopen profile DS406 V4.0 with manufacturer-specific add-ons, LSS-Service, bootloader
Power-ON time:	< 1200 ms
SDO timeout:	< 1000 ms
Baud rate:	10 - 1000 kbit/s software configurable
Node address:	1 - 127 software configurable
Termination:	software configurable
LSS protocol:	CIA LSS protocol DS305, global command support for node address and baud rate, selective commands via attributes of the identity object
Bootloader:	configuration management CIA DS 302-3

[1)] = short circuit protected to **0**v of to output when power supply currently applied
[2)] = over the entire temperature range

General Information about CANopen

The CANopen encoders support the latest CANopen communication profile according to DS301 V4.02 . In addition, device-specific profiles like the encoder profile DS406 V3.2, DS305 (LSS) and DS302 (Bootloader) are available.

The following operating modes may be selected: Polled Mode, Cyclic Mode, Sync Mode. Moreover, scale factors, preset values, limit switch values and many other additional parameters can be programmed via the CANbus. When switching the device on, all parameters, which have been saved on a flash memory to protect them against power failure, are loaded again.

The following output values may be combined in a freely variable way as PDO(PDO mapping): **position**, **speed, acceleration** as well as the **status of the working area.**

The encoders are available with a connector or a cable connection.

The device address and baud rate can be set/ modified by means of the software.

The two-color LED located on the back indicates the operating or fault status of the CAN-bus, as well as the status of the internal diagnostics.

CANbus connection

The CANopen encoders are equipped with a bus trunk line in various lengths or a M12 connector and can be terminated in the device.

The devices do not have an integrated T-coupler nor are they looped internally and must therefore only be used as end devices.

LSS layer setting services DS305 V2.0

- Global support of node-ID and baud rate configuration.
- Selective protocol via identity object (1018h)

CANopen Communication Profile DS301 V4.2

Among others, the following functionality is integrated. (Class C2 functionality):

- NMT Slave
- Heartbeat Protocol
- Identity Object
- Error Behavior Object
- Variable PDO Mapping self-start programmable (Power on to operational), 3 Sending PDO's
- Node address, baud rate and CANbus / programmable termination

CANopen encoder profile DS406 V4.0

The following parameters can be programmed:

- Event mode, start optional
- 1 work area with upper and lower limit and the corresponding output states
- Variable PDO mapping for position, speed, work area status, error and acceleration
- Extended failure management for position sensing
- User interface with visual display of bus and failure status 1 LED two colors
- Customer-specific protocol
- "Watchdog controlled" device

Bootloader functionality DS302-3

Configuration Management:

- Program download
- Program start
- Program erase

Standard Wiring:

Connection Type:	+V	Common (0 V)	CAN GND	CAN High	CAN Low
Cable:	BN	WH	GY	GN	YE
M12 Eurofast:	2	3	1	4	5

Wiring Diagram:

Male Encoder View

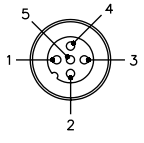

Mating Cordset[1)]:
RKC 572-*M/S3117

* Length in meters.
[1)] See Connectivity section H for corresponding cable color code.

We reserve the right to make technical alterations without prior notice.

Turck Inc. | 3000 Campus Drive, Minneapolis, MN 55441 | T +1 800 544 7769 | F +1 763 553 0708 | www.turck.com

Absolute, Multiturn Type RM-121 — CANopen

Part Number Key: RM-121 Shaft Version

A	B	C		D		E
RM-121T	6	C	-	9D38B	-	H1151

A	Type
RM-121T	Ø 39 mm, Shaft, IP65 Shaft Seal

D	Voltage Supply and Output Type
9D38B	10 - 30 VDC, CANopen DS301 V4.02

B	Shaft (Ø × L)
6	Ø 6 mm × 10 mm
10	Ø 10 mm × 20 mm

E	Type of Connection
H1151	Radial 1 × M12 Eurofast Connector
C1M	Radial Cable (1 m PUR)

C	Flange
C	Ø 58 mm Clamping Flange
S	Ø 58 mm Servo Flange

Accessories:

- See page H1, Connectivity, for cables and connectors
- See page G1, Accessories, for mounting attachments and couplings

We reserve the right to make technical alterations without prior notice.

Absolute, Multiturn Type RM-121 CANopen

Dimensions: RM-121 Shaft Version

RM-121 Flange C
Connection H1151

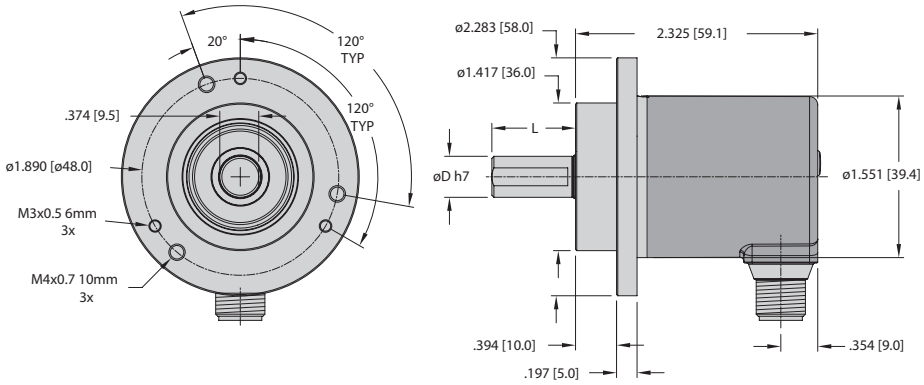

RM-121 Flange S
Connection C1M

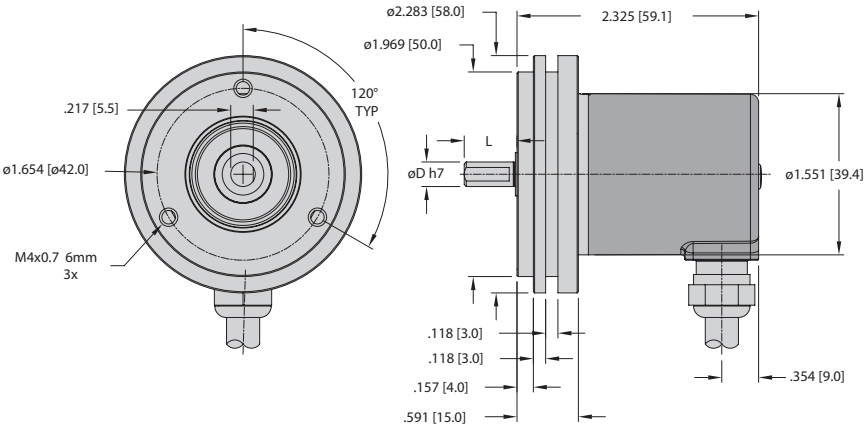

Mounting Advice:
The flanges and shafts of the encoder and drive should not be rigidly coupled together at the same time. We recommend the use of suitable couplings (see page G1, Accessories).

We reserve the right to make technical alterations without prior notice.

Absolute, Multiturn Type RM-121 — SAE J1939

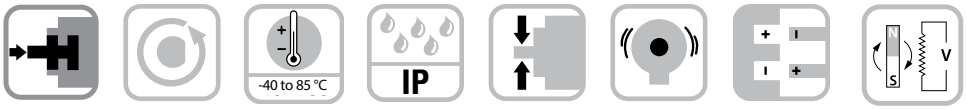

Bearing-Lock | High rotational speed | Temperature range | High IP | High shaft load capacity | Shock/vibration resistant | Reverse polarity protection | Energy Harvesting

Highest Robustness

- Sturdy bearing construction in Bearing-Lock design for particularly high resistance.
- Extra large bearings.
- Mechanically protected shaft seal.
- Wide temperature range –40 + 85 °C.
- Without gear and without battery, thanks to the Energy Harvesting technology.



Absolute

SAE J1939

Compact Housing

- Can be used where space is tight: 39 mm housing with 58 mm flange.

Up-To-The-Minute Fieldbus Performance

- SAE J1939 with CAN-highspeed to ISO 11898.
- Variable PDO mapping in the memory.
- Universal scaling function.
- Fast determination of the operating status via two-color LED.

Mechanical Characteristics:

Max. speed:	4000 RPM 2000 RPM (continuous)
Starting torque (68 °F | 20 °C):	< 1.4 oz - in (0.01 Nm)
Shaft load capacity: Radial: Axial:	 18 lbs (80 N) 9 lbs (40 N)
Weight:	approx. 0.44 lbs (0.2 kg)
Protection acc. to EN 60529/DIN 40050-9:	IP65
Working temperature range:	–40 to +185 °F (–40 to +85 °C)
Materials: Shaft: Flange: Housing: Cable:	 stainless steel: V2A(304) aluminum zinc die-cast PVC
Shock resistance acc. to EN 60068-2-27:	500 g (5000 m/s²), 4 ms
Vibration resistance acc. to EN 60068-2-6:	30 g (300 m/s²), 10 - 2,000 Hz

We reserve the right to make technical alterations without prior notice.

Absolute, Multiturn Type RM-121 — SAE J1939

General Electrical Characteristics:

Sensor:	
Power supply:	10 - 30 VDC
Current consumption (no load):	max. 30 mA
Reverse polarity protection at power supply (+V):	yes
Short-circuit protected outputs:	yes[1)]
UL approval:	file E356899
CE compliant acc. to:	EMC guideline 2014/30/EU RoHS guideline 2011/65/EU

Interface Characteristics SAE J1939:

Resolution singleturn:	1 - 16384 (14 bit), scalable default: 16384 (14 bit)
Absolute accuracy[2)]:	±1 °
Repeat accuracy:	±0.2 °
Number of revolutions (multiturn):	max. 536,870,912 (29 bit) scalable only via the total resolution
Total resolution:	1...8,796,093,022,208 (43 bit), scalable default: 4,294,967,296 (32 bit)
Interface:	CAN high-speed acc. to ISO 11898, Basic- and Full-CAN, CAN specification 2.0 B
Protocol:	SAE J1939
Power-ON time:	< 1200 ms
Baud rate:	250 kbit/s switchable by software to 500 kbit/s
Node address:	software configurable
Termination:	software configurable

[1)] = short circuit protected to **0**v of to output when power supply currently applied
[2)] = over the entire temperature range

General Information about SAE J1939

The protocol J1939 originates from the international Society of Automotive Engineers (SAE) and operates on the physical layer with high speed CAN as per ISO11898. The application emphasis lies in the area of the power train and chassis of commercial vehicles. It serves to transfer diagnostic data (for example, motor speed, position, temperature) and control information. Turck SAE J1939 encoders support the total functionality of J1939.

This protocol is a multimaster system with decentralized network management that does not involve channel-based communication.

It supports up to 254 logic nodes and 30 physical control devices per segment. The information is described as parameters (signals) and combined on 4 memory pages (data pages) into parameter groups (PGs). Each parameter group can be identified via a unique number, the parameter group number (PGN). Independently of this, each signal is assigned a unique SPN (suspect parameter number).

The major part of the communication occurs cyclically and can be received by all control devices without the explicit request for data (Broadcast). Furthermore the parameter groups are optimized to a length of 8 data bytes. This enables very efficient utilization of the CAN protocol. If greater amounts of data need to be transferred, then transport protocols (TP) can be used: BAM (broadcast announce message) and CMDT (connection mode data transfer). With BAM TP the transfer of data occurs as a broadcast.

Encoder implementation SAE J1939

- PGNs that are adaptable to the customer's application.
- Resolution of address conflicts -> Address Claiming (ACL).
- Continuous checking whether control addresses have been assigned twice within a network.
- Change of control device addresses during run-time.
- Unique identification of a control device with the help of a name that is unique worldwide. This name serves to identify the functionality of a control device in the network.
- Predefined PGs for position, speed and alarm.
- 250 kbit/s, 29 bit identifier.
- Watchdog controlled device.
- A two-color LED, located on the rear of the encoder, signals the operating and fault status of the J1939 protocol, as well as the status of the internal sensor diagnostics.

Wiring Diagram:

Male Encoder View

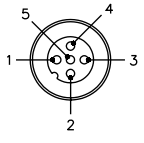

Mating Cordset[1)]:
RKC 572-*M/S3117

* Length in meters.
[1)] See Connectivity section H for corresponding cable color code.

Standard Wiring:

Connection Type:	+V	Common (0 V)	CAN GND	CAN High	CAN Low
Cable:	BN	WH	GY	GN	YE
M12 Eurofast:	2	3	1	4	5

We reserve the right to make technical alterations without prior notice.

Turck Inc. | 3000 Campus Drive, Minneapolis, MN 55441 | T +1 800 544 7769 | F +1 763 553 0708 | www.turck.com

Absolute, Multiturn Type RM-121 SAE J1939

Part Number Key: RM-121 Shaft Version

A	B	C		D		E
RM-121T	6	C	-	9F43B	-	H1151

A	Type
RM-121T	Ø 39 mm, Shaft, IP65 Shaft Seal

D	Voltage Supply and Output Type
9F43B	10 - 30 VDC, SAE J1939

B	Shaft (Ø × L)
6	Ø 6 mm × 10 mm
10	Ø 10 mm × 20 mm

E	Type of Connection
H1151	Radial 1 × M12 Eurofast Connector
C1M	Radial Cable (1 m PUR)

C	Flange
C	Ø 58 mm Clamping Flange
S	Ø 58 mm Servo Flange

Accessories:

- See page H1, Connectivity, for cables and connectors
- See page G1, Accessories, for mounting attachments and couplings

We reserve the right to make technical alterations without prior notice.

Absolute, Multiturn Type RM-121 SAE J1939

Dimensions: RM-121 Shaft Version

RM-121 Flange C
Connection H1151

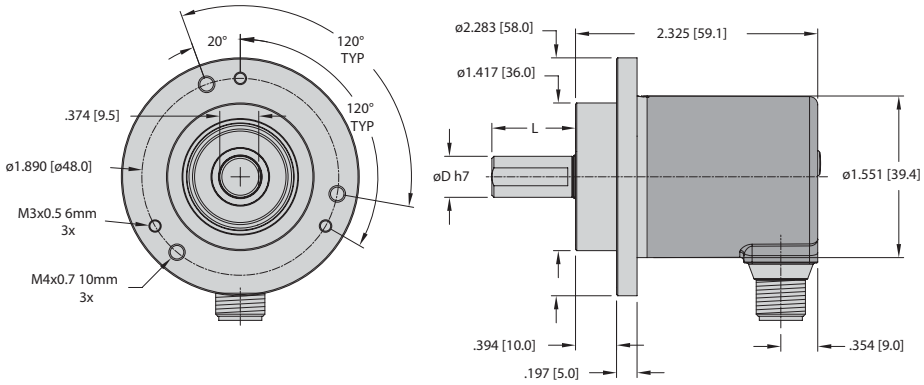

RM-121 Flange S
Connection C1M

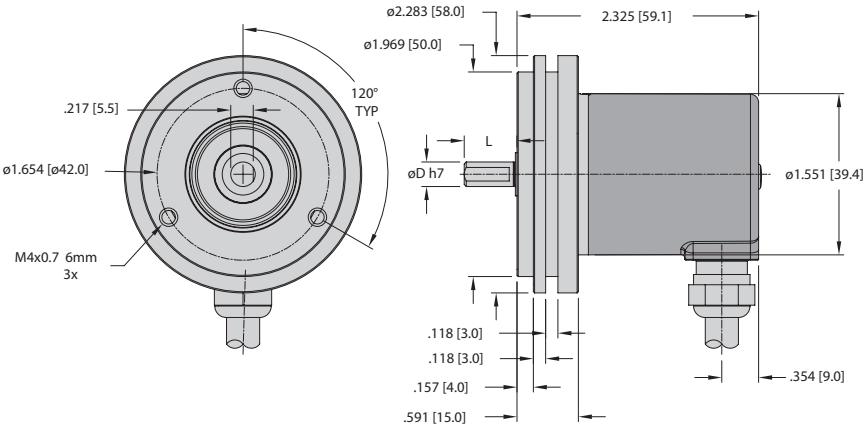

Mounting Advice:
The flanges and shafts of the encoder and drive should not be rigidly coupled together at the same time. We recommend the use of suitable couplings (see page G1, Accessories).

We reserve the right to make technical alterations without prior notice.

Turck Inc. | 3000 Campus Drive, Minneapolis, MN 55441 | T +1 800 544 7769 | F +1 763 553 0708 | www.turck.com

Absolute, Multiturn Type RM-46 (Shaft) / RM-50 (Blind / Hollow Shaft) SSI/BiSS-C

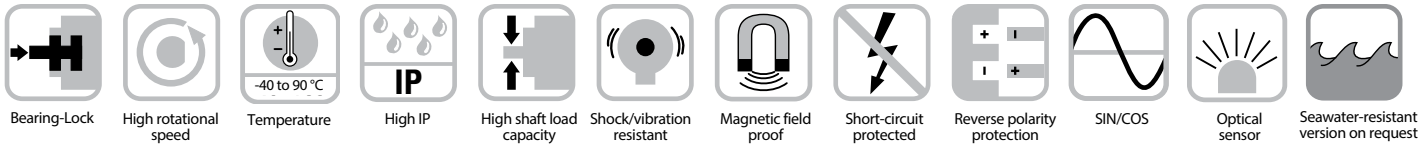

Bearing-Lock | High rotational speed | Temperature | High IP | High shaft load capacity | Shock/vibration resistant | Magnetic field proof | Short-circuit protected | Reverse polarity protection | SIN/COS | Optical sensor | Seawater-resistant version on request

Reliable

- **Increased ability to withstand vibration and installation errors.** Sturdy Bearing-Lock design structure **eliminates machine downtime and repairs.**
- **Fewer components and connection points increase the operational reliability:** Turck OptoASIC technology with highest integration density (Chip-on-Board).
- Die cast housing and protection up to IP67: **Remains sealed even when subjected to harsh everyday use.**
- Wide temperature range of -40 to +194 °F (-40 to +90 °C).
- **Easy diagnosis in case of fault condition.** Status indication by means of LED, sensor, voltage and temperature monitoring.



Absolute

Fast

- **High accuracy:** Update rate of the whole position value above 100 kHz for a max. jitter of 1 µs (real-time).
- **High productivity due to very short regulation cycles:** Clock rate with SSI up to 2 MHz, with BiSS-C up to 10 MHz.
- **High-resolution feedback system achievable in real-time:** SinCos incremental outputs.

Versatile

- **Connections for every application:** Tangential cable.
- **Open interfaces ensure flexibility and independence:** SSI or BiSS-C with Sine-Cosine-Option incremental track RS422.
- Multiple mounting brackets for easy installation.
- **Compact design.**
- **Fast and easy start-up on site:** Preset and reversal of rotation direction by control inputs.
- **Direct mounting on standard diameter shafts up to 10 mm** through hollow shaft up to 8 mm.

We reserve the right to make technical alterations without prior notice.

Mechanical Characteristics:

Max. speed, shaft or blind hollow shaft version without shaft sealing (IP65):	12,000 RPM, continuous operation 10,000 RPM
Max. speed, shaft version (IP67) or blind hollow shaft (IP65) with shaft sealing:	10,000 RPM, continuous operation 8,000 RPM
Starting torque without shaft sealing:	< 1 oz-in (< 0.007 Nm)
Starting torque with shaft sealing:	< 1.4 oz-in (< 0.01 Nm)
Radial load capacity of shaft:	9 lbs (40 N)
Axial load capacity of shaft:	4.5 lbs (20 N)
Weight:	approx. 0.44 lbs (0.2 kg)

Protection acc. to EN 60 529:	Housing: IP67, Shaft: IP65, opt. IP67
Working temperature:	-40 to +194 °F (-40 to +90 °C)
Materials:	Shaft/Hollow shaft: stainless steel, Flange: aluminum, Housing: die cast zinc, Cable: PUR
Shock resistance acc. to DIN-IEC 68-2-27:	> 250 g (> 2,500 m/s²), 6 ms
Vibration resistance acc. to DIN-IEC 68-2-6:	> 10 g (>100 m/s²), 55-2,000 Hz

General Electrical Characteristics:

Supply voltage:	5 VDC ±5% or 10-30 VDC
Current consumption (without output load):	5 VDC: max. 60 mA, 10-30 VDC: max. 30 mA
Reverse polarity protection at power supply (+V):	Yes
RoHS compliant acc. to EU guideline 2011/65/EU	
UL approval:	file E356899

Output driver:	RS485 transceiver type
Permissible load/channel:	max. ± 30 mA
Signal level high:	typ. 3.8 V
Signal level low at I_{load} = 20 mA:	typ. 1.3 V
Short-circuit protected:	yes [1]

Interface Characteristics SSi:

Singleturn resolution:	10-17 bit
Number of revolutions:	Max. 24 bit
Code:	binary or gray
SSI clock rate:	≤ 14 bit: 50 kHz-2 MHz / ≥ 15 bit: 50 kHz-125 kHz
Monoflop time:	≤ 15 µs

Date refresh rate:	Up to 14 bits, ≤1 µs Up to 15-17 bits, 4 µs
Status and Parity bit:	Optional on request

Note: If clock starts cycling within monoflop time, a second data transfer starts with the same data. If clock starts cycling after monoflop time, the data transfer starts with updated values. Max. update rate is dependent on clock speed, data length and monoflop time.

[1] Short-circuit to 0 V or to output, one channel at a time, supply voltage correctly applied

Absolute, Multiturn Type RM-46 (Shaft) / RM-50 (Blind / Hollow Shaft) SSI/BiSS-C

Interface Characteristics BiSS-C:

Singleturn resolution:	10-17 bit
Number or revolutions:	Max. 24 bit
Code:	Binary
Clock rate:	up to 10 MHz
Max. update rate:	< 10 µs, depending on clock speed and data length
Data refresh rate:	≤ 1 µs

Note: Bidirectional, programmable parameters are: resolution, code, direction, alarms and warnings; Multicycle data output (e.g., for temperature); CRC data verification

Incremental Output (A/B). 2048 PPR:

	Sin/Cos	RS422 Compatible
Max. -3dB frequency:	400 kHz	400 kHz
Signal level:	1 Vpp (±20%)	High: min. 2.5 V Low: max. 0.5 V
Short-circuit proof:	yes [1]	yes [1]

[1] Short-circuit to 0 V or to output, one channel at a time, supply voltage correctly applied

Status Output and LED:

Output driver:	open collector, internal pull up resistor 22 kOhm
Permissible load:	Max. 20 mA
Signal level high:	+V
Signal level low:	< 1 V
Active at:	Low

The optional LED (red) and the status output serve to display various alarm or error messages. In normal operation, the LED is OFF and the status output is HIGH (open-collector with int. pull-up 22 k).

If the LED is ON (status output LOW) this indicates: Sensor error, singleturn or multiturn (soiling, glass breakage etc.); LED error, failure or aging; Over temperature; Under voltage.
In the SSI mode, the fault indication can only be reset by switching off the power-supply to the device.

SET Input:

Input characteristics:	active HIGH
Input type:	comparator
Signal level high:	min. 60% of V+ (supply voltage), max: V+
Signal level low:	max. 30% of V+ (supply voltage)
Input current:	< 0.5 mA
Min. pulse duration (SET):	10 ms
Input delay:	1 ms
New position data readable after:	1 ms
Internal processing time:	200 ms

The encoder may be set to zero at any position by means of a HIGH signal on the SET input or by pressing the optional SET key. Other preset values may be factory programmed. The SET input has a signal delay time of approximately 1 ms. Once the SET function has been triggered, the encoder requires an internal processing time of approximately 200 ms before the new position data can be read. During this time the LED is ON and the status output is at LOW.

Response time (DIR input)	1 ms

DIR Input:

A HIGH signal switches the direction of rotation from the default CW to CCW. This inverted function can also be factory-programmed. If DIR is changed when the device is already switched on, then this will be interpreted as an error. The LED will come ON and the status output will switch to LOW.

Power-On Delay:

After Power-ON the device requires a time of approx. 150 ms before valid data can be read.

Wiring Diagrams:

Male Encoder View
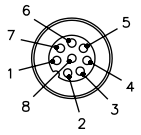
M12 Eurofast Pinout
Mating Cordset: **E-RKS 8T-264-***

* Length in meters.

Standard Wiring:

Output Circuit *C and *F (SSI or BiSS-C, SET, DIR, Status) (Connection CT*M)

Connection Type:	Common (0 V)	+V	+Clock	-Clock	+Data	-Data	SET	DIR	Status	PE
Cable:	WH	BN	GN	YE	GY	PK	BU	RD	VT	Shield

Output Circuit *C and *F (SSI or BiSS-C, SET, DIR) (Connection CT1M-RSS8T)

Connection Type:	GND	+V	+Clock	-Clock	+Data	-Data	SET	DIR	Shield/PE
M12 Eurofast:	1	2	3	4	5	6	7	8	PH

Output Circuit *E and *G (SSI or BiSS-C, SET, DIR, 2048 Sin/Cos) (Connection CT*M)

Connection Type:	GND	+V	+Clock	-Clock	+Data	-Data	SET	DIR	A	A inv	B	B inv	PE
Cable:	WH	BN	GN	YE	GY	PK	BU	RD	BK	VT	GY/PK	RD/BU	Shield

Output Circuit *H (SSI or BiSS-C, SET, DIR, Voltage Sense Outputs) (Connection CT*M)

Connection Type:	GND	+V	+Clock	-Clock	+Data	-Data	SET	DIR	0 V sens	+V sens	PE
Cable:	WH	BN	GN	YE	GY	PK	BU	RD	VT	RD/BU	Shield

Output Circuit *J (SSI or BiSS-C, SET, DIR, 2048 Sin/Cos, Voltage Sense Outputs) (Connection CT*M)

Connection Type:	GND	+V	+Clock	-Clock	+Data	-Data	0 V sens	+V sens	A	A inv	B	B inv	PE
Cable:	WH	BN	GN	YE	GY	PK	BU	RD	BK	VT	GY/PK	RD/BU	Shield

Output Circuit *K and *L (SSI or BiSS-C, SET, DIR, 2048 Sin/Cos) (Connection CT*M)

Connection Type:	GND	+V	+Clock	-Clock	+Data	-Data	A	A inv	B	B inv	PE
Cable:	WH	BN	GN	YE	GY	PK	BK	VT	GY/PK	RD/BU	Shield

We reserve the right to make technical alterations without prior notice.

Absolute, Multiturn Type RM-46 (Shaft) / RM-50 (Blind / Hollow Shaft) SSI/BiSS-C

Part Number Key: RM-46 Shaft Version

A	B	C		D	E1	E2		F
RM-46S	6	C	-	5F	10S	12M	-	CT1M

A	Type
RM-46S	Ø 39 mm, Shaft, IP67 Shaft Seal
RM-46T	Ø 39 mm, Shaft, IP65 Shaft Seal

B	Shaft (Ø x L)
6	Ø 6 mm x 12.5 mm
8	Ø 8 mm x 15 mm
10	Ø 10 mm x 20 mm
A0	Ø 1/4" x 12.5 mm
A1	Ø 3/8" x 5/8"

C	Flange
C	Ø 36 mm Clamping Flange
S	Ø 36 mm Servo Flange

E1	Resolution (Singleturn)
10S	10-bit
12S	12-bit
13S	13-bit
14S	14-bit
17S	17-bit

E2	Resolution (Multiturn)
12M	12-bit
16M	16-bit
24M	24-bit

F	Type of Connection
CT1M	Tangential Cable (1 m PUR)
CT5M	Tangential Cable (5 m PUR)
CT1M-RSS8T	Tangential Cable w/ 1m M12 Eurofast Connector*

* Only Available with Output Type *C and *F

D	Voltage Supply and Output Type			
	SSI (B)	SSI (G)	BiSS-C	Features
5 V	5F	3F	DF	
	5E	3E	DE	2048 PPR SinCos
	5H	3H	DH	Voltage Monitoring
	5J	3J	DJ	2048 PPR SinCos Plus Voltage Monitoring
	5K	3K	DK	2048 PPR Incr., RS422 (TTL-Compatible)
10-30 V	5C	3C	DC	
	5G	3G	DG	2048 PPR SinCos
	5L	3L	DL	2048 PPR Incr., RS422

(B) = Binary, (G) = Gray

Accessories:

- See page H1, Connectivity, for cables and connectors
- See page G1, Accessories, for mounting attachments and couplings

We reserve the right to make technical alterations without prior notice.

Absolute, Multiturn Type RM-46 (Shaft) / RM-50 (Blind / Hollow Shaft) SSI/BiSS-C

Part Number Key: RM-50 Hollow Shaft Version

A	B	C		D	E1	E2		F
RM-50B	6	E	-	5F	10S	12M	-	CT1M

A	Type
RM-50B	Ø 39 mm, Blind Hollow Shaft, IP65 Shaft Seal [1]
RM-50H	Ø 39 mm, Hollow Shaft, IP65 Shaft Seal

[1] Only Available with Bore '10'

B	Bore
6	Ø 6 mm
8	Ø 8 mm
10	Ø 10 mm
A0	Ø 1/4"

C	Flange
E	Ø 36 mm Flange w/ Slotted Flex Mount
T	Ø 36 mm Flange w/ Long Torque Stop
T1	Ø 36 mm Flange w/ Short Torque Stop

E1	Resolution (Singleturn)
10S	10-bit
12S	12-bit
13S	13-bit
14S	14-bit
17S	17-bit

E2	Resolution (Multiturn)
12M	12-bit
16M	16-bit
24M	24-bit

F	Type of Connection
CT1M	Tangential Cable (1 m PUR)
CT5M	Tangential Cable (5 m PUR)
CT1M-RSS8T	Tangential Cable w/ 1 m M12 Eurofast Connector*

* Only Available with Output Type *C and *F

D	Voltage Supply and Output Type			
	SSI (B)	SSI (G)	BiSS-C	Features
5 V	5F	3F	DF	
	5E	3E	DE	2048 PPR SinCos
	5H	3H	DH	Voltage Monitoring
	5J	3J	DJ	2048 PPR SinCos Plus Voltage Monitoring
	5K	3K	DK	2048 PPR Incr., RS422 (TTL-Compatible)
10-30 V	5C	3C	DC	
	5G	3G	DG	2048 PPR SinCos
	5L	3L	DL	2048 PPR Incr., RS422

(B) = Binary, (G) = Gray

We reserve the right to make technical alterations without prior notice.

Accessories:

- See page H1, Connectivity, for cables and connectors
- See page G1, Accessories, for mounting attachments and couplings

Absolute, Multiturn Type RM-46 (Shaft) / RM-50 (Blind / Hollow Shaft) SSI/BiSS-C

Dimensions: RM-46 Shaft Version

RM-46 Flange C
Connection CT1M

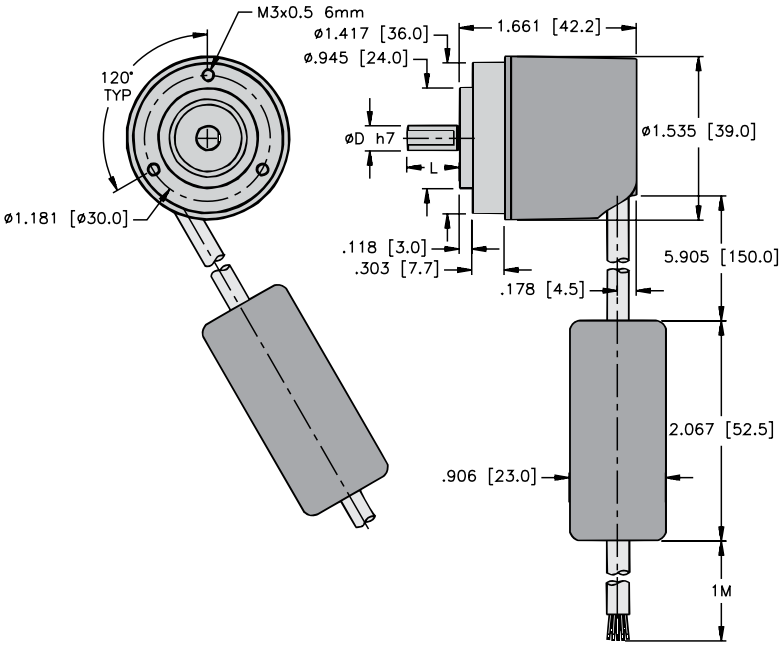

RM-46 Flange S
Connection CT5M

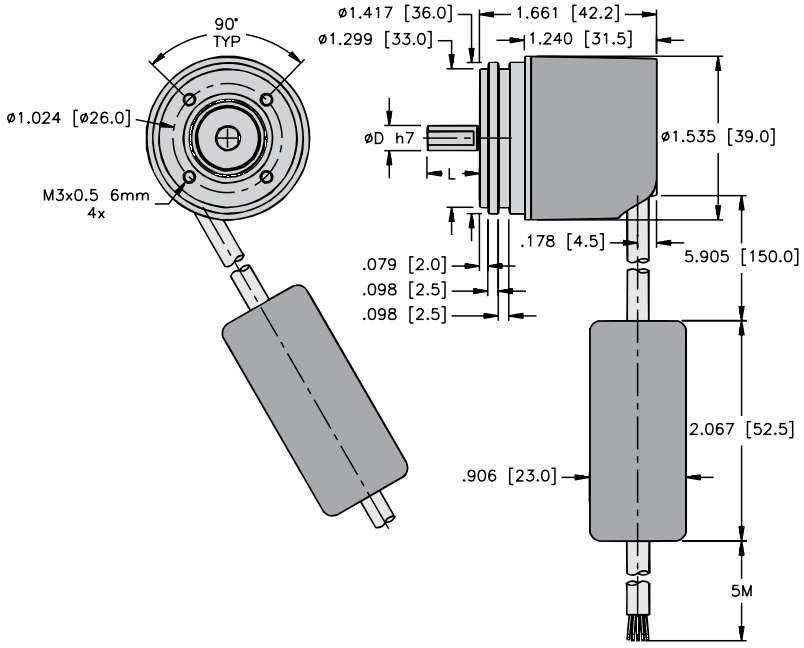

We reserve the right to make technical alterations without prior notice.

Absolute, Multiturn Type RM-46 (Shaft) / RM-50 (Blind / Hollow Shaft) SSI/BiSS-C

Dimensions: RM-50 Hollow Shaft Version

RM-50 Flange T&T1
Connection CT1M

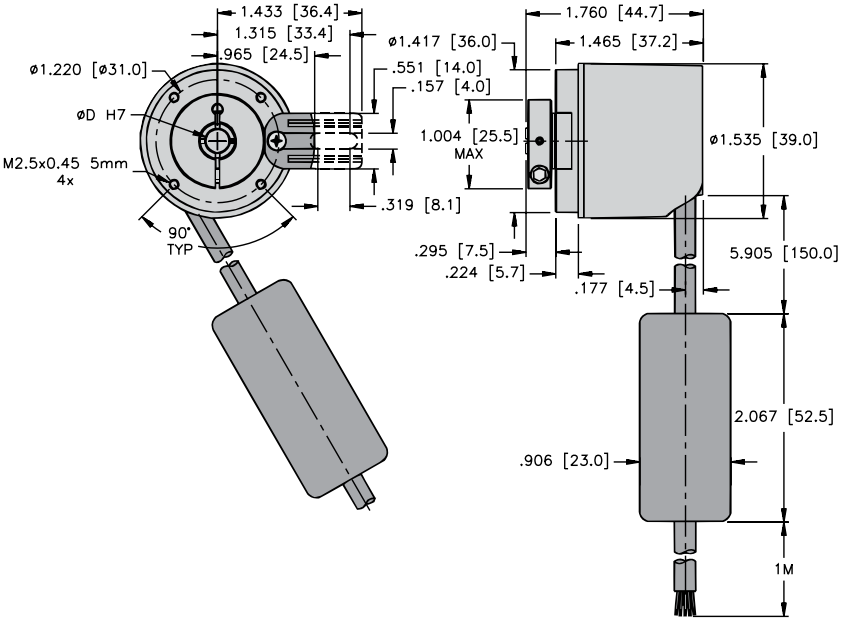

RM-50 Flange E (Blind Hollow Shaft)
Connection CT1M-RSC8T

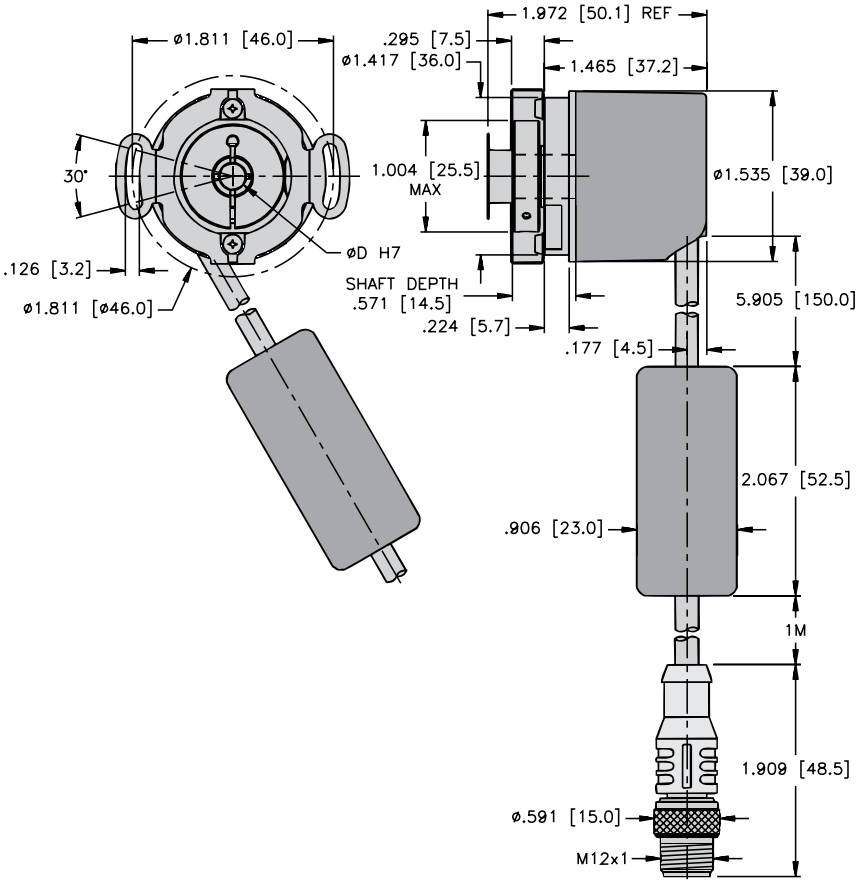

We reserve the right to make technical alterations without prior notice.

Absolute, Multiturn Type RM-47 (Shaft) / RM-51 (Blind Hollow Shaft) CANopen

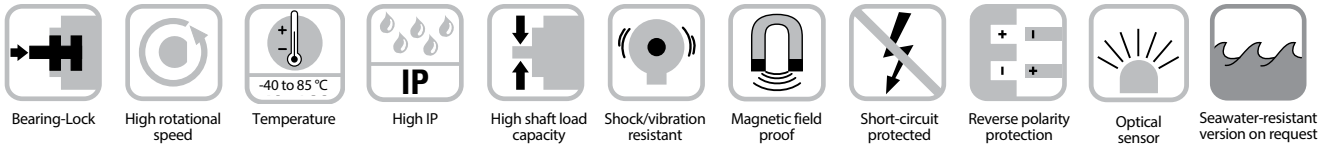

Bearing-Lock | High rotational speed | Temperature | High IP | High shaft load capacity | Shock/vibration resistant | Magnetic field proof | Short-circuit protected | Reverse polarity protection | Optical sensor | Seawater-resistant version on request

Rugged

- Electronic multiturn is 100% magnetic-field resistant.
- Sturdy bearing construction in Bearing-Lock design for resistance against vibration and installation errors.
- Wide temperature range: -40 to +185 °F (-40 to +85 °C).



Absolute

cULus

RoHS

CANopen

Versatile

- CANopen with current encoder profile.
- LSS services for configuration of the node address and baud rate.
- Variable PDO mapping in the memory.
- Universal scaling function.

Compact

- **Overall size of 36 x 42 mm:** Hollow shaft of up to 8 mm, blind hollow shaft of up to 10 mm.

Mechanical Characteristics:

Max. speed: Shaft or blind hollow shaft version without shaft sealing (IP65): Shaft version (IP67) or blind hollow shaft (IP65) with shaft sealing:	12,000 RPM, continuous operation 10,000 RPM 10,000 RPM, continuous operation 8,000 RPM
Starting torque without shaft sealing:	< 1 oz-in (< 0.007 Nm)
Starting torque with shaft sealing:	< 1.4 oz-in (< 0.01 Nm)
Radial load capacity of shaft:	9 lbs (40 N)
Axial load capacity of shaft:	4.5 lbs (20 N)
Weight:	approx. 0.44 lbs (0.2 kg)
Protection acc. to EN 60 529:	Housing: IP67 Shaft: IP65, opt. IP67
Working temperature:	-40 to +185 °F (-40 to +85 °C)
Materials:	Shaft/Hollow shaft: stainless steel, Flange: aluminum, Housing: die cast zinc, Cable: PUR
Shock resistance acc. to DIN-IEC 68-2-27:	> 250 g (> 2,500 m/s²), 6 ms
Vibration resistance acc. to DIN-IEC 68-2-6:	> 10 g (>100 m/s²), 55-2,000 Hz

Diagnostic LED (two-color, red/green):

LED ON or blinking:	red: error display green: status display

General Electrical Characteristics:

Supply voltage:	10-30 VDC
Current consumption (no load):	Max. 80 mA
Reverse connection of the supply voltage (+V):	yes
RoHS compliant acc. to EG-guideline 2011/65/EU	
UL approval:	file E356899

Interface Characteristics CANopen:

Resolution Singleturn:	1-65536 (16 bit), scaleable: 1-65536
Default value Singleturn:	8192 (13 bit)
Total resolution:	1-4.294.967.296 (32 bit); Default: 25 bit
Code:	Binary
Interface:	CAN High-Speed according to ISO 11898, Basic- and Full-CAN , CAN Specification 2.0 B
Protocol:	CANopen profil DS 406 V3.2 with manufacturer specific add-ons LSS-Service DS305 V2.0
Baud rate:	10-1000 kbit/s (software configurable)
Node address:	1-127 (software configurable)
Termination switchable:	Software configurable
LSS Protocol	CIA LSS protocol DS305 Global command support for node address and baud rate. Selective commands via attributes of the identity object

We reserve the right to make technical alterations without prior notice.

Absolute, Multiturn Type RM-47 (Shaft) / RM-51 (Blind Hollow Shaft) CANopen

General Information about CANopen

The CANopen encoders support the latest CANopen communication profile according to DS 301 V4.02 . In addition, device specific profiles, like the DS 406 V3.2, are available.

The following operating modes may be selected: Polled Mode, Cyclic Mode, Sync Mode. Moreover, scale factors, preset values, limit switch values and many other additional parameters can be programmed via the CANbus. When switching the device on, all parameters, which have been saved on a flash memory to protect them against power failure, are loaded again. Position, speed and status of the working area output values may be combined in a freely variable way as PDO mapping.

The encoders are available with a cable connection. The device address and baud rate may be set/modified by means of the software. A two-color LED indicates the operating or fault status of the CANbus, as well as the status of the internal diagnostics.

CANopen Communication Profile DS301 V4.02

The following Class C2 functionality is integrated:

- NMT Slave
- Heartbeat Protocol
- Identity Object
- Error Behavior Object
- Variable PDO Mapping self-start programmable (Power on to operational), 3 sending PDO's
- Node address, baud rate and CANbus/programmable termination

CANopen Encoder Profile DS406 V3.2

The following parameters may be programmed:

- Event mode
- One work area with upper and lower limit and the corresponding output states
- Variable PDO mapping for position, speed, work area status
- Extended failure management for position sensing
- User interface with visual display of bus and failure status: 1 LED, two-color
- Customer-specific memory - 16 Bytes
- "Watchdog controlled" device

LSS Layer Setting Services DS305 V2.0

- Global support of Node-ID and baud rate
- Selective protocol via identity object (1018h)

Universal scaling function

At the end of the physical resolution of an encoder, when scaling is active, an error appears if the division of the physical limit (GP_U) by the programmed total resolution (TMR) does not produce an integer.
The universal scaling function remedies this problem.

Standard Wiring:

Connection Type:	+V	0 V	CAN GND	CAN High	CAN Low
Cable:	BN	WH	GY	GN	YE

Part Number Key: RM-47 Shaft Version

A	B	C		D		E
RM-47S	6	C	-	9D32B	-	CT1M

A	Type
RM-47S	Ø 39 mm, Shaft, IP67 Shaft Seal
RM-47T	Ø 39 mm, Shaft, IP65 Shaft Seal

B	Shaft (Ø x L)
6	Ø 6 mm x 12.5 mm
8	Ø 8 mm x 15 mm
10	Ø 10 mm x 20 mm
A0	Ø 1/4" x 12.5 mm
A1	Ø 3/8" x 5/8"

C	Flange
C	Ø 36 mm Clamping Flange
S	Ø 36 mm Servo Flange

D	Voltage Supply and Output Type
9D32B	10-30 VDC, CANopen DS 301 V4.02

E	Type of Connection
CT1M	Tangential Cable (1 m PUR)
CT5M	Tangential Cable (5 m PUR)
CT10M	Tangential Cable (10 m PUR)

Part Number Key: RM-51 Blind Hollow Shaft Version

A	B	C		D		E
RM-51B	6	E	-	9D32B	-	CT1M

A	Type
RM-51B	Ø 39 mm, Blind Hollow Saft, IP65 Shaft Seal

B	Bore (14.5 mm Insertion Depth)
6	Ø 6 mm
8	Ø 8 mm
10	Ø 10 mm
A0	Ø 1/4"

C	Flange
E	Ø 36 mm Flange w/ Slotted Flex Mount
T	Ø 36 mm Flange w/ Long Torque Stop
T1	Ø 36 mm Flange w/ Short Torque Stop

D	Voltage Supply and Output Type
9D32B	10-30 VDC, CANopen DS 301 V4.02

E	Type of Connection
CT1M	Tangential Cable (1 m PUR)
CT5M	Tangential Cable (5 m PUR)
CT10M	Tangential Cable (10 m PUR)

Accessories:

- See page H1, Connectivity, for cables and connectors
- See page G1, Accessories, for mounting attachments and couplings

We reserve the right to make technical alterations without prior notice.

Turck Inc. | 3000 Campus Drive, Minneapolis, MN 55441 | T +1 800 544 7769 | F +1 763 553 0708 | www.turck.com

Absolute, Multiturn Type RM-47 (Shaft) / RM-51 (Blind Hollow Shaft) CANopen

Dimensions: RM-47 Shaft Version

RM-47 Flange C
Connection CT1M

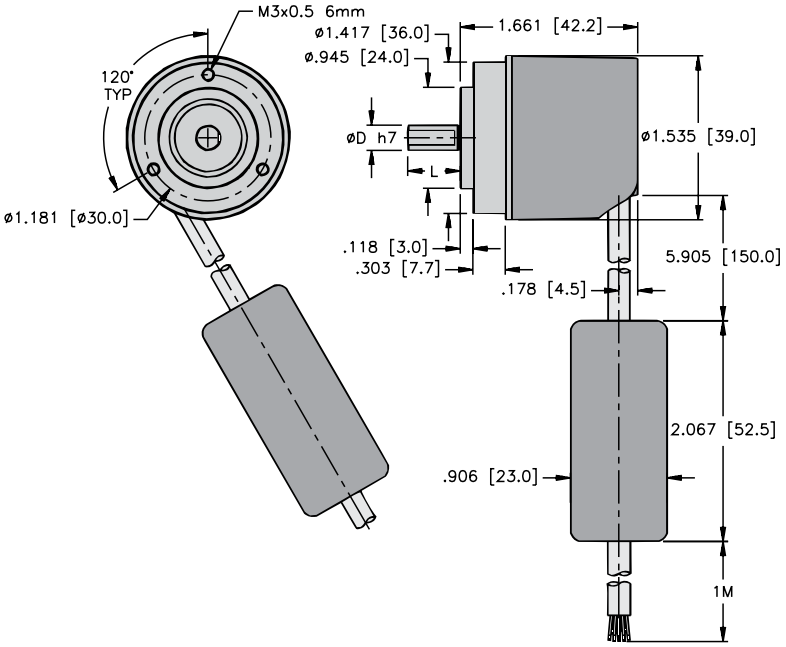

RM-47 Flange S
Connection CT5M

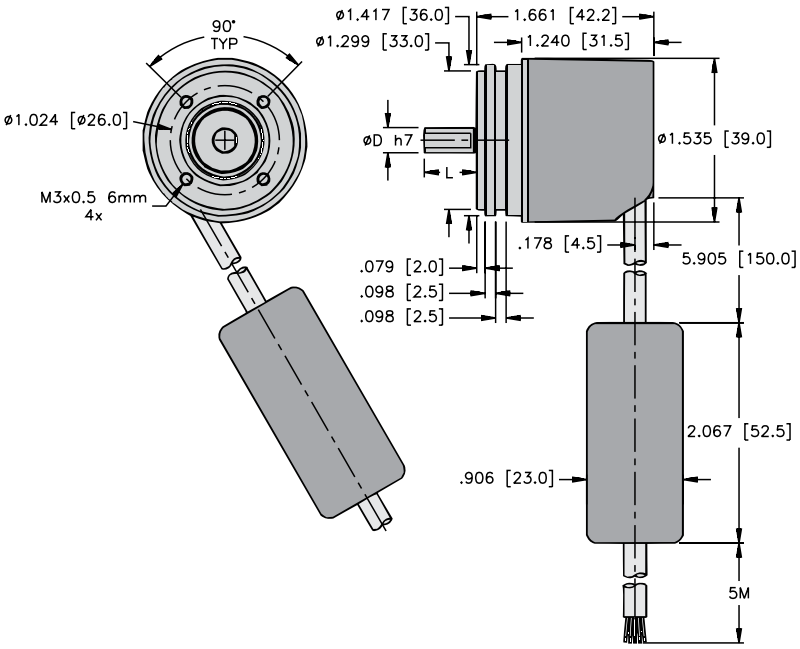

We reserve the right to make technical alterations without prior notice.

Absolute, Multiturn Type RM-47 (Shaft) / RM-51 (Blind Hollow Shaft) CANopen

Dimensions: RM-51 Blind Hollow Shaft Version

RM-51 Flange T&T1
Connection CT1M

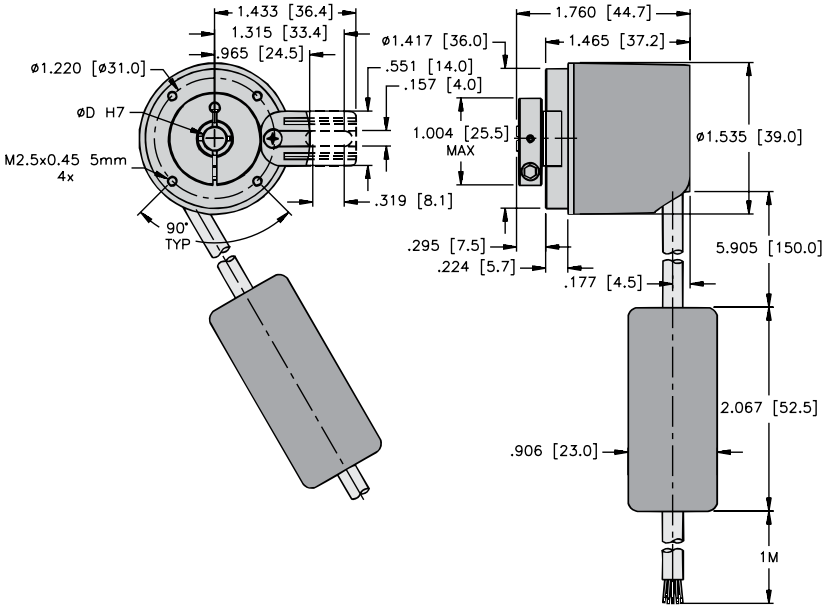

RM-51 Flange E (Blind Hollow Shaft)
Connection CT5M

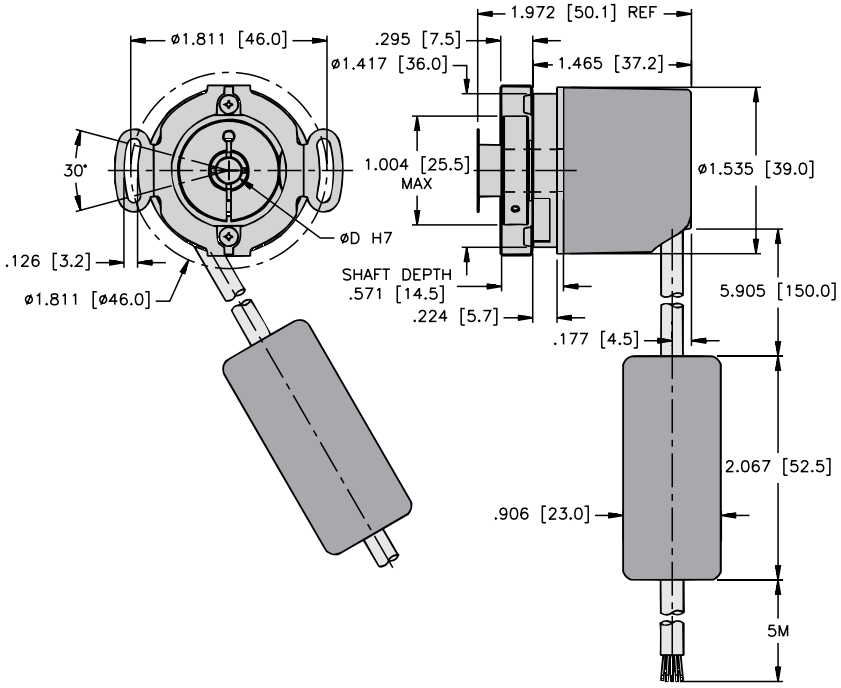

We reserve the right to make technical alterations without prior notice.

Turck Inc. | 3000 Campus Drive, Minneapolis, MN 55441 | T +1 800 544 7769 | F +1 763 553 0708 | www.turck.com

Absolute, Multiturn Type RM-28 (Shaft) / RM-35 (Hollow Shaft) — SSI/BiSS-C



Mechanical drive | Bearing-Lock | High rotational speed | Temperature | High IP | High shaft load capacity | Shock/vibration resistant | Magnetic field proof | Short-circuit protected | Reverse polarity protection | SIN/COS | Seawater-resistant version on request

Reliable

- **Increased ability to withstand vibration and installation errors.** Sturdy Bearing-Lock design structure **eliminates machine downtime and repairs.**
- **Fewer components and connection points increase the operational reliability:** Turck OptoASIC technology with highest integration density (Chip-on-Board).
- Die cast housing and protection up to IP67: **Remains sealed even when subjected to harsh everyday use.**
- Wide temperature range.
- **Easy diagnosis in case of fault condition.** Status indication by means of LED, sensor, voltage and temperature monitoring.



Absolute

Fast

- **High accuracy:** Update rate of the whole position value above 100 kHz.
- **High productivity due to very short regulation cycles:** Clock rate with SSI up to 2 MHz, with BiSS-C up to 10 MHz.
- **High-resolution feedback system achievable in real-time:** SinCos incremental outputs.

Versatile

- **Connections for every application:** M12, M23 and cable connector.
- **Open interfaces ensure flexibility and independence:** SSI or BiSS-C with Sine-Cosine-Option incremental track RS422.
- Multiple mounting brackets for easy installation.
- Status LED and set key available.
- **Quick, simple on site start-up:** Set key or preset by means of a control input.

Mechanical Characteristics:

Shaft version: Max. speed without shaft sealing (IP65) up to 158 °F (70 °C): Max. speed without shaft sealing (IP65) up to Tmax: Max. speed with shaft sealing (IP67) up to 158 °F (70 °C): Max. speed with shaft sealing (IP67) up to Tmax:	 12,000 RPM, continuous 10,000 RPM 8,000 RPM, continuous 5,000 RPM 11,000 RPM, continuous 9,000 RPM 8,000 RPM, continuous 5,000 RPM
Hollow shaft version: Max. speed without shaft sealing (IP65) up to 158 °F (70 °C): Max. speed without shaft sealing (IP65) up to Tmax: Max. speed with shaft sealing (IP67) up to 158 °F (70 °C): Max. speed with shaft sealing (IP67) up to Tmax:	 9,000 RPM, continuous 6,000 RPM 6,000 RPM, continuous 3,000 RPM 8,000 RPM, continuous 4,000 RPM 4,000 RPM, continuous 2,000 RPM
Starting torque without shaft seal (IP65):	Shaft version: < 1.4 oz-in (< 0.01 Nm) Hollow shaft version: < 4.25 oz-in (< 0.03 Nm)
Starting torque with shaft seal (IP67):	< 7 oz-in (< 0.05 Nm)
Moment of inertia:	Shaft version: 0.219 oz-in^2 (4.0 x 10^{-6} kgm^2) Hollow shaft version: 0.383 oz-in^2 (7.0 x 10^{-6} kgm^2)
Radial load capacity of shaft:	18 lbs (80 N)
Axial load capacity of shaft:	9 lbs (40 N)
Weight:	approx. 1 lb (0.45 kg)
Protection acc. to EN 60 529:	Housing: IP67, Shaft: IP65, opt. IP67
Working temperature:	-40 to +194 °F (-40 to +90 °C) [1]
Materials:	Shaft: stainless steel, Flange: aluminum, Housing: die cast zinc, Cable: PVC
Shock resistance acc. to DIN-IEC 68-2-27:	> 250 g (> 2,500 m/s^2), 6 ms
Vibration resistance acc. to DIN-IEC 68-2-6:	> 10 g (> 100 m/s^2), 55-2,000 Hz

[1] Cable versions: -22 to +167 °F (-30 to +75 °C)

We reserve the right to make technical alterations without prior notice.

Absolute, Multiturn Type RM-28 (Shaft) / RM-35 (Hollow Shaft) SSI/BiSS-C

General Electrical Characteristics:

Supply voltage:	5 VDC +5% or 10-30 VDC
Current consumption (without output load):	5 VDC: max. 80 mA, 10-30 VDC: max. 50 mA
Reverse polarity protection at power supply (+V):	Yes (only 10-30 VDC)
RoHS compliant according to EU guideline 2011/65/EU	
UL approval:	file E356899

General Interface Characteristics:

Output driver:	RS485 Transceiver type
Permissible load/channel:	max. 20 mA
Signal level high:	typ. 3.8 V
Signal level low at	typ. 1.3 V, I_{load} = 20 mA:
Short-circuit protected:	Yes [1]

Interface Characteristics SSI:

Singleturn resolution:	10-14 bits and 17 bits [2]
Number of revolutions:	4096 (12 bits)
Code:	Binary or Gray
SSI clock rate:	≤ 14 bits: 50 kHz-2 MHz ≥ 15 bits: 50 kHz -125kHz
Monoflop time:	≥ 15 µs

Note:
If clock starts cycling within monoflop time, a second data transfer starts with the same data. If clock starts cycling after monoflop time, the data transfer starts with updated values. The update rate is dependent on clock speed, data length and monoflop time.

Data refresh rate:	< 1 µs up to 14 bits, 4 µs for 15-17 bits
Status and Parity bit:	optional on request

Interface Characteristics BiSS-C:

Singleturn resolution:	10-14 bits and 17 bits, customer programmable [2]
Number of revolutions:	4096 (12 bits)
Code:	Binary
Clock rate:	up to 10 MHz
Max. update rate:	< 10 µs, depending on clock rate and data length
Data refresh rate:	≤ 1 µs

Note:
- Bidirectional, programmableparameters are: resolution, code, direction, alarms and warnings
- Multicycle data output (e.g., for temperature)
- CRC data verification

[1] Short-circuit to 0 V or to output, one channel at a time, supply voltage correctly applied
[2] Other options upon request

SET (zero or defined value) and Direction (CW/CCW) Control Inputs

Input:	High active
Input type:	Comparator
Signal level high:	min. 60% of V+ (Supply voltage), max: V+
Signal level low:	max. 25% of V+ (Supply voltage)
Input current:	< 0.5 mA
Min. pulse duration (SET):	10 ms
Timeout after SET input:	14 ms
Reaction Time (DIR input):	1 ms

The encoder can be set to zero at any position by means of a HIGH signal on the SET input or by pressing the optional SET key. Other preset values may be factory programmed. The SET input has a signal delay time of approximately 1 ms. Once the SET function has been triggered, the encoder requires an internal processing time of approximately 15 ms before the new position data can be read. During this time the LED is ON and the status output is at LOW.

Status Output and LED

Output driver:	Open collector, internal pull up resistor 22 kOhm
Permissible load:	Max. 20 mA
Signal level high:	+V
Signal level low:	< 1 V
Active at:	Low

The optional LED (red) and the status output serve to display various alarm or error messages. In normal operation the LED is OFF and the status output is HIGH (open-collector with int. pull-up 22 k).

If the LED is ON (status output LOW) this indicates:
- Sensor error, singleturn or multiturn (soiling, glass breakage etc.)
- LED error, failure or aging
- Over- or under-temperature

In the SSI mode, the fault indication can only be reset by switching off the power-supply to the device.

DIR Input

A HIGH signal switches the direction of rotation from the default CW to CCW. This inverted function can also be factory-programmed. If direction is changed when the device is already switched on, then this will be interpreted as an error. The LED will come ON and the status output will switch to LOW.

Power-On Delay

After Power-ON the device requires a time of approx. 150 ms before valid data can be read.

Option Incremental Output (A/B), 2048 PPR:

	SinCos	RS422 TTL-compatible
-3dB frequency:	400 kHz	400 kHz
Signal level:	1 Vpp (+ 20%)	High: min. 2.5 V Low: max. 0.5 V
Short-circuit proof:	Yes	Yes

We reserve the right to make technical alterations without prior notice.

Turck Inc. | 3000 Campus Drive, Minneapolis, MN 55441 | T +1 800 544 7769 | F +1 763 553 0708 | www.turck.com

Absolute, Multiturn Type RM-28 (Shaft) / RM-35 (Hollow Shaft) SSI/BiSS-C

Standard Wiring:
Output Circuit *C and *F (2 Control Inputs, 1 Status Output) (Connection C*1M or 12M23*)

Connection Type:	Common (0 V)	+V	+Clock	-Clock	+Data	-Data	ST	DIR	Status	NC	NC	NC	PE
M23 Multifast:	1	2	3	4	5	6	7	8	9	10	11	12	PH
Cable:	WH	BN	GN	YE	GY	PK	BU	RD	BK	-	-	-	Shield

Output Circuit *H (2 Control Inputs, 1 Status Output, Voltage Monitor Outputs) (Connection C*1M or 12M23*)

Connection Type:	Common (0 V)	+V	+Clock	-Clock	+Data	-Data	ST	DIR	Status	NC	0 V Sens	+V Sens	PE
M23 Multifast	1	2	3	4	5	6	7	8	9	10	11	12	PH
Cable:	WH	BN	GN	YE	GY	PK	BU	RD	BK	-	GY/PK	RD/BU	Shield

Output Circuit *E, *G, *K or *L (2 Control Inputs, Incremental Track or Sine/Cosine) (Connection C*1M or 12M23*)

Connection Type:	Common (0 V)	+V	+Clock	-Clock	+Data	-Data	ST	DIR	Sin A	Sin inv A-	Cos B	Cos inv B-	PE
M23 Multifast	1	2	3	4	5	6	7	8	9	10	11	12	PH
Cable:	WH	BN	GN	YE	GY	PK	BU	RD	BK	VT	GY/PK	RD/BU	Shield

Output Circuit *J and *M (Sine/Cosine, Incremental Monitor or Voltage Outputs) (Connection C*1M or 12M23*)

Connection Type:	Common (0 V)	+V	+Clock	-Clock	+Data	-Data	Sin A	Sin inv A-	Cos B	Cos inv B-	0 V Sens	+V Sens	PE
M23 Multifast:	1	2	3	4	5	6	7	8	9	10	11	12	PH
Cable:	WH	BN	GN	YE	GY	PK	BU	RD	BK	VT	GY/PK	RD/BU	Shield

Output Circuit *C and *F (2 Control Inputs) (Connection H1*81)

Connection Type:	Common (0 V)	+V	+Clock	-Clock	+Data	-Data	ST	DIR	PE
M12 Eurofast :	1	2	3	4	5	6	7	8	PH

Wiring Diagrams:

Male Encoder View	
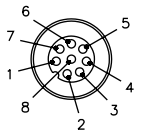	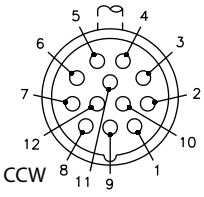
M12 Eurofast Pinout	M23 Multifast Pinout
Mating Cordset: **E-RKC 8T-264-***	Mating Cordset: **E-CKM 12-1687-*/A**

* Length in meters.



Encoder with tangential cable outlet



Safe operation in strong magnetic fields
Special gears with specific toothing

We reserve the right to make technical alterations without prior notice.

Absolute, Multiturn Type RM-28 (Shaft) / RM-35 (Hollow Shaft) SSI/BiSS-C

Part Number Key: RM-28 Shaft Version

A	B	C		D	E		F		G
RM-28S	6	C	-	5F	22B	-	H1181	/	N16

A	Type
RM-28S	Ø 58 mm, Shaft, IP67 Shaft Seal
RM-28T	Ø 58 mm, Shaft, IP65 Shaft Seal

B	Shaft (Ø x L)
6	Ø 6 mm x 10 mm
10	Ø 10 mm x 20 mm
A0	Ø 1/4" x 7/8"
A1	Ø 3/8" x 7/8"

C	Flange
C	Ø 58 mm Clamping Flange
S	Ø 58 mm Servo Flange
S0	Ø 2.5" Servo Flange
R	2.5" Square Flange

E	Resolution [1]
22B	10 bits ST + 12 bits MT
23B	11 bits ST + 12 bits MT
24B	12 bits ST + 12 bits MT
25B	13 bits ST + 12 bits MT
26B	14 bits ST + 12 bits MT
29B	17 bits ST + 12 bits MT

[1] Resolution, Preset Value and Counting Direction Factory-Programmable

F	Type of Connection
H1181	Radial 8-pin M12 Eurofast Connector [2]
H1481	Axial 8-pin Eurofast Connector [2]
12M23	Radial 12-pin M23 Multifast Connector
12M23A	Axial 12-pin M23 Multifast Connector
C1M	Radial Cable (1 m PVC)
CA1M	Axial Cable (1 m PVC)

[2] Only Available with Output Type *C and *F

G	Options
(BLANK)	SET Button and Status LED (Standard)
N16	No Option
N43	Status LED

D	Voltage Supply and Output Type			
	SSI (B)	SSI (G)	BiSS-C	Features
5 V	5F	3F	DF	
	5E	3E	DE	2048 PPR SinCos
	5H	3H	DH	Voltage Monitoring
	5J	3J	DJ	2048 PPR SinCos Plus Voltage Monitoring
	5K	3K	DK	2048 PPR Incr., RS422 (TTL-Compatible)
	5M	3M	DM	2048 PPR Incr. RS422 (TTL-Compatible) Plus Voltage Monitoring
10-30 V	5C	3C	DC	
	5G	3G	DG	2048 PPR SinCos
	5L	3L	DL	2048 PPR Incr., RS422

(B) = Binary, (G) = Gray

We reserve the right to make technical alterations without prior notice.

Accessories:

- See page H1, Connectivity, for cables and connectors
- See page G1, Accessories, for mounting attachments and couplings

Absolute, Multiturn Type RM-28 (Shaft) / RM-35 (Hollow Shaft) SSI/BiSS-C

Part Number Key: RM-35 Hollow Shaft Version

A	B	C		D	E		F		G
RM-35H	10	T	-	5F	22B	-	H1181	/	N16

A	Type
RM-35H	Ø 58 mm, Hollow Shaft, IP67 Shaft Seal
RM-35I	Ø 58 mm, Hollow Shaft, IP65 Shaft Seal

B	Bore
10	Ø 10 mm
12	Ø 12 mm
14	Ø 14 mm
15	Ø 15 mm
A1	Ø 3/8"
A3	Ø 1/2"

C	Flange
T	Ø 50 mm Flange w/ Torque Stop
E	Ø 63 mm Flange w/ Slotted Flex Mount
E1	Ø 65 mm Flange w/ Flex Mount

E	Resolution [1]
22B	10 bits ST + 12 bits MT
23B	11 bits ST + 12 bits MT
24B	12 bits ST + 12 bits MT
25B	13 bits ST + 12 bits MT
26B	14 bits ST + 12 bits MT
29B	17 bits ST + 12 bits MT

[1] Resolution, Preset Value and Counting Direction Factory-Programmable

F	Type of Connection
H1181	Radial 8-pin M12 Eurofast Connector [2]
12M23	Radial 12-pin M23 Multifast Connector
C1M	Radial Cable (1 m PVC)
CT1M	Tangential Cable (1 m PVC)

[2] Only Available with Output Type *C and *F

G	Options
(BLANK)	SET Button and Status LED (Standard)
N16	No Option
N43	Status LED

D	Voltage Supply and Output Type			
	SSI (B)	SSI (G)	BiSS-C	Features
5 V	5F	3F	DF	
	5E	3E	DE	2048 PPR SinCos
	5H	3H	DH	Voltage Monitoring
	5J	3J	DJ	2048 PPR SinCos Plus Voltage Monitoring
	5K	3K	DK	2048 PPR Incr., RS422 (TTL-Compatible)
	5M	3M	DM	2048 PPR Incr. RS422 (TTL-Compatible) Plus Voltage Monitoring
10-30 V	5C	3C	DC	
	5G	3G	DG	2048 PPR SinCos
	5L	3L	DL	2048 PPR Incr., RS422

(B) = Binary, (G) = Gray

We reserve the right to make technical alterations without prior notice.

Accessories:

- See page H1, Connectivity, for cables and connectors
- See page G1, Accessories, for mounting attachments and couplings

Absolute, Multiturn Type RM-28 (Shaft) / RM-35 (Hollow Shaft) SSI/BiSS-C

Dimensions: RM-28 Shaft Version

RM-28 Flange R
Connection C*1M

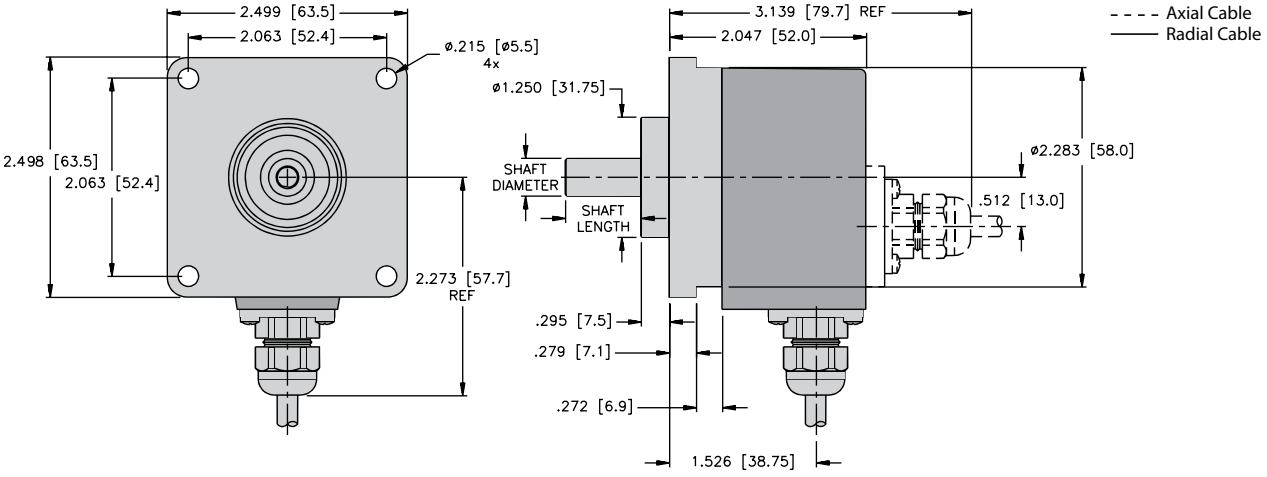

RM-28 Flange C
Connection 12M23*

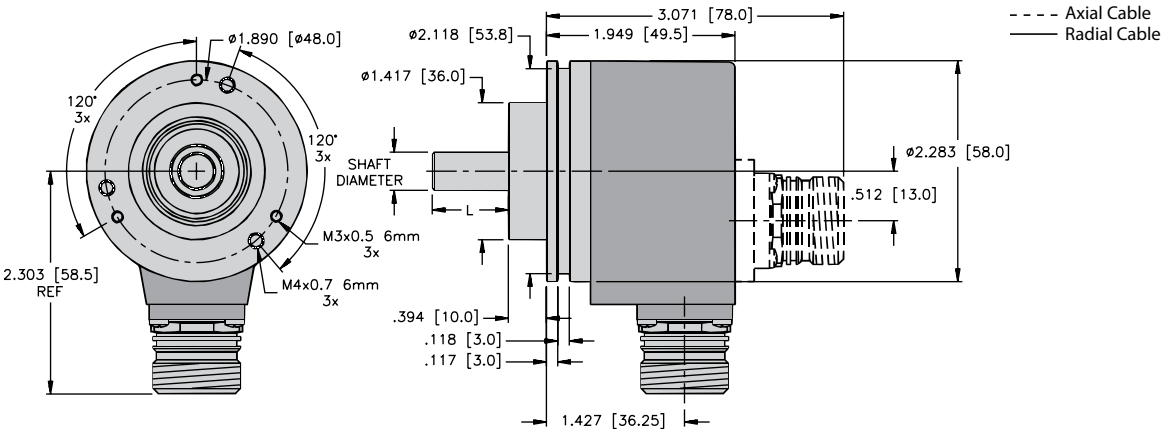

RM-28 Flange S
Connection H1*81

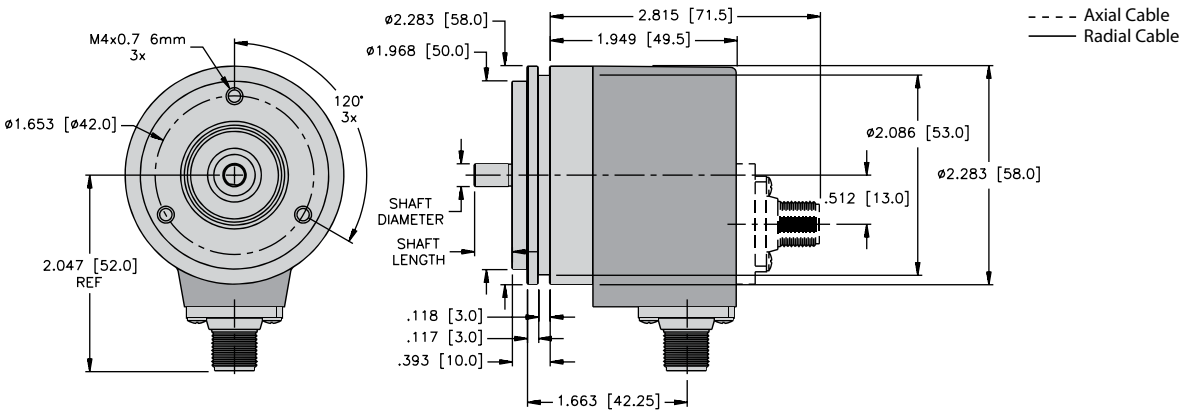

We reserve the right to make technical alterations without prior notice.

Absolute, Multiturn Type RM-28 (Shaft) / RM-35 (Hollow Shaft) SSI/BiSS-C

Dimensions: RM-28 Shaft Version

RM-28 Flange S0
Connection H1*81

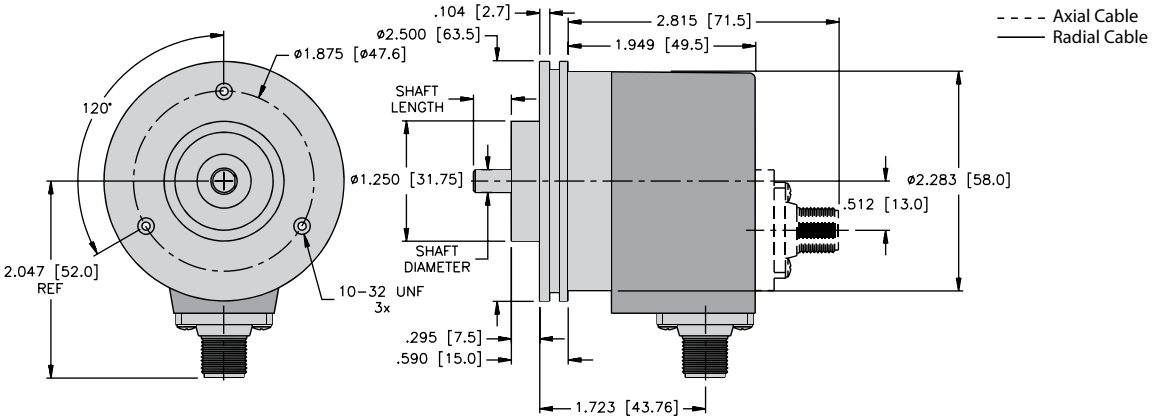

Dimensions: RM-35 Hollow Shaft Version

RM-35 Flange E1
Connection C1M

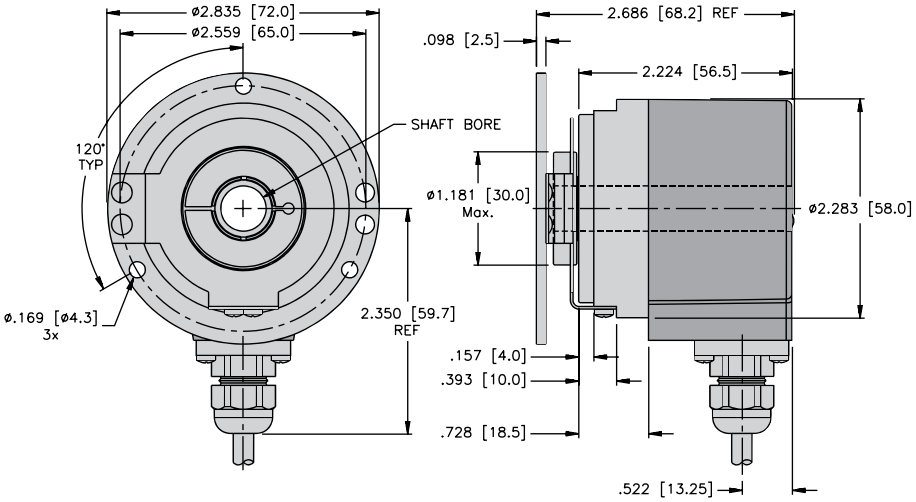

RM-35 Flange E
Connection 12M23

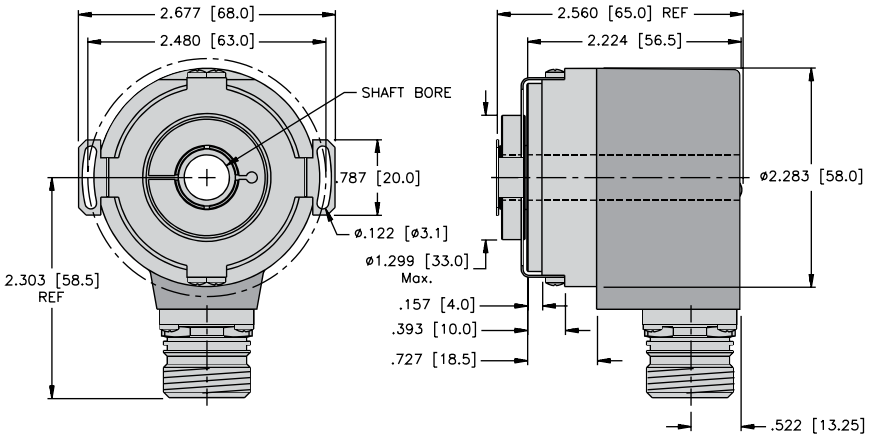

We reserve the right to make technical alterations without prior notice.

Absolute, Multiturn Type RM-28 (Shaft) / RM-35 (Hollow Shaft) SSI/BiSS-C

Dimensions: RM-35 Hollow Shaft Version

RM-35 Flange T
Connection H1181

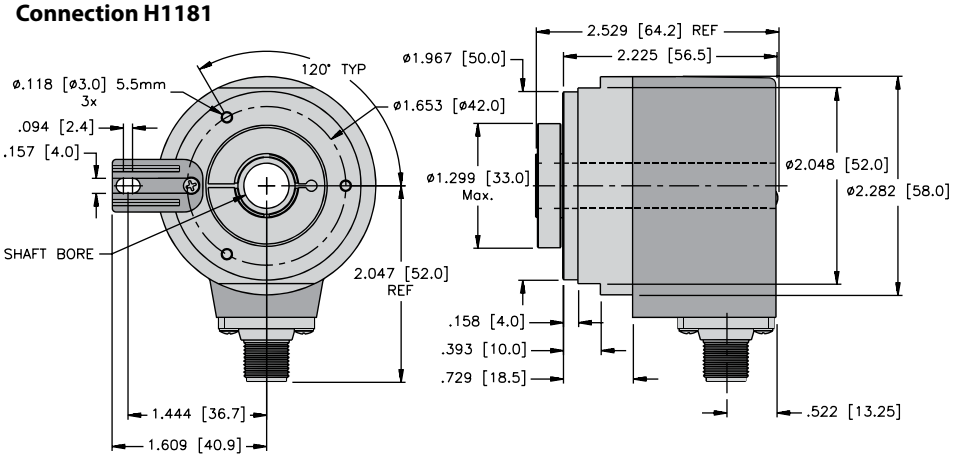

RM-35 Flange T
Connection CT1M

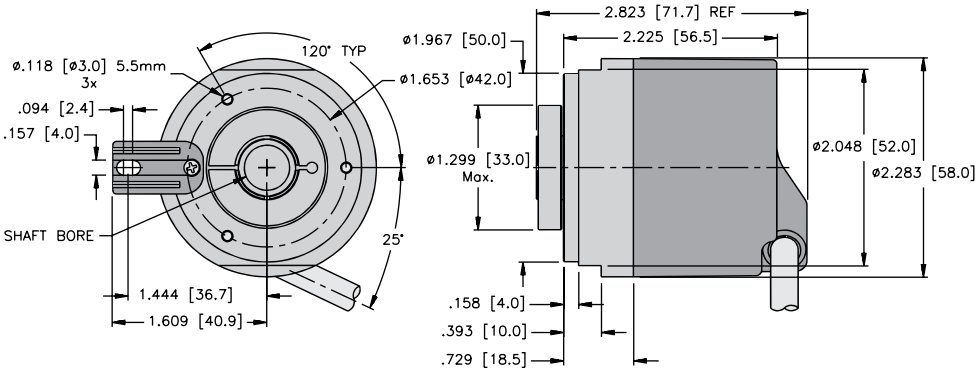

We reserve the right to make technical alterations without prior notice.

Absolute, Multiturn Type RM-29 (Shaft) / RM-36 (Blind Hollow Shaft) — CANopen/CANlift



Mechanical drive | Bearing-Lock | High rotational speed | Temperature | High IP | High shaft load capacity | Shock/vibration resistant | Magnetic field proof | Short-circuit protected | Reverse polarity protection | Optical sensor | Seawater-resistant version on request

Reliable

- **Increased ability to withstand vibration and installation errors.** Sturdy Bearing-Lock design structure **eliminates machine downtime and repairs.**
- **Fewer components and connection points increase the operational reliability:** Turck OptoASIC technology with highest integration density (Chip-on-Board).
- Die cast housing and protection up to IP67: **Remains sealed even when subjected to harsh everyday use.**
- Wide temperature range.



Absolute

CANopen

CANopen LIFT

Fast

- **Real time-servo position detection of several axes:** Extended CAN Sync Mode with realtime position acquisition.
- **Fast data availability, while reducing the load on the bus and the controller:** Intelligent functions like the transmission of speed, acceleration or exiting a working area.

Versatile

- CANopen, CANlift fieldbus with the latest profiles.
- **Connections for every application:** Bus terminal cover with M12 connector or fixed connection with M12, M23 or D-Sub connector. Point-to-point connections also available.
- **Real-time data: Position, speed or working area.** Variable PDO mapping in the memory.
- **Fast, error-free start-up, without setting any switches.** Node address, baud rate and termination can be programmed via the bus.
- Direct mounting of hollow shaft on large diameter standard shafts; up to 15 mm for blind hollow shaft.

Mechanical Characteristics:

Max. speed without shaft sealing (IP65) up to 158 °F (70 °C): Max. speed without shaft sealing (IP65) up to Tmax: Max. speed with shaft sealing (IP67) up to 158 °F (70 °C): Max. speed with shaft sealing (IP67) up to Tmax:	9,000 RPM, continuous 7,000 RPM 7,000 RPM, continuous 4,000 RPM 8,000 RPM, continuous 6,000 RPM 6,000 RPM, continuous 3,000 RPM
Starting torque without shaft seal (IP65):	1.4 oz-in (< 0.01 Nm)
Starting torque with shaft seal (IP67):	4.25 oz-in (< 0.03 Nm)
Moment of inertia:	Shaft version: 0.219 oz-in^2 (4.0 x 10^{-6} kgm^2) Hollow shaft version: 0.41 oz-in^2 (7.5 x 10^{-6} kgm^2)
Radial load capacity of shaft:	18 lbs (80 N)
Axial load capacity of shaft:	9 lbs (40 N)
Weight:	approx. 1.26 lbs (0.57 kg) with bus terminal cover approx. 1.15 lbs (0.52 kg) with fixed connection
Protection acc. to EN 60 529:	Housing: IP67, Shaft: IP65, opt. IP67
Working temperature:	-40 to +176 °F (-40 to +80 °C) [1]
Materials:	Shaft: stainless steel, Flange: aluminum, Housing: die cast zinc, Cable: PVC
Shock resistance acc. to DIN-IEC 68-2-27:	> 250 g (> 2,500 m/s^2), 6 ms
Vibration resistance acc. to DIN-IEC 68-2-6:	> 10 g (> 100 m/s^2), 55-2,000 Hz

[1] Cable versions: -22 to +167 °F (-30 to +75 °C)



- Safe operation in strong magnetic fields
- Special gears with specific toothing

We reserve the right to make technical alterations without prior notice.

Absolute, Multiturn Type RM-29 (Shaft) / RM-36 (Blind Hollow Shaft) CANopen/CANlift

General Electrical Characteristics:

Supply voltage:	10-30 VDC
Current consumption (w/o output load):	Max. 100 mA
Reverse polarity protection:	Yes
RoHS compliant acc. to EU guideline 2011/65/EU	
UL approval:	file E356899

SET Control Button (zero or defined value, option)

Protected against accidental activation, can only be depressed with the tip of a ballpoint pen or similar.

Diagnostic LED (yellow)

LED on with: optical sensor path faulty (code error, LED error), low voltage and over-temperature

Incremental Track Characteristics:

Output driver:	RS422 (TTL-compatible)
Permissible load/channel:	Max. 20 mA
Signal level:	High typ. 3.8 V Low typ. 1.3 V
Short circuit protected:	Yes [1)]
Resolution:	2048 ppr

[1)] Short circuit to OV or to output, only one channel at a time, supply voltage correctly applied.

Interface Characteristics CANopen/CANlift:

Singleturn resolution (max, scalable):	1-65536 (16 bits), default scale value is set to 8192 (13 bits)
Total resolution:	1-268 435 456 (28 Bit) Default: 25 bit
Code:	Binary
Interface:	CAN High-Speed according ISO 11898, Basic and Full-CANCAN Specification 2.0 B
Protocol:	CANopen profile DS 406 V3.2 with manufacturer-specific add-on's or CANlift profile DS 417 V1.1
Baud rate:	10-1000 kbits/s (set by DIP switches/software configurable)
Node address:	1-127 (set by rotary switches/software configurable)
Termination switchable:	Set by DIP switches (software configurable)

We reserve the right to make technical alterations without prior notice.

General Information about CAN/CANlift

The CANopen encoders support the latest CANopen communication profile according to DS 301 V4.02. In addition, device-specific profiles, like the DS 406 V3.2 and DS 417 V1.1 (for lift applications), are available. The following operating modes may be selected: Polled Mode, Cyclic Mode, Sync Mode and a High Resolution Sync Protocol. Moreover, scale factors, preset values, limit switch values and many other additional parameters may be programmed via the CANopen fieldbus. When switching the device on, all parameters, which have been saved on an EEPROM to protect them against power failure, are loaded again.

Position, speed, acceleration and status output values may be combined in a freely variable way as PDO mapping.

Encoders with a connector or a cable connection are available. Models with bus terminal cover and integrated T-shaped coupler allow a particularly easy installation via M12 connectors. The device address is set by means of two hexadecimal rotary switches. Furthermore, another DIP switch allows setting the baud rate and switching on a termination resistor. Three LEDs indicate the operating or fault status of the CANopen fieldbus, as well as the status of an internal diagnostics.

CANopen Communication Profile DS 301 V4.02

The following functionality is integrated:
Class C2 Functionality • NMT Slave • Heartbeat Protocol • High Resolution Sync Protocol • Identity Object • Error Behavior Object • Variable PDO Mapping • Self-start programmable (power on to operational) •Three Sending PDO's • Node address, baud rate and CANbus • Programmable termination

CANopen Encoder Profile DS 406 V3.2

The following parameters may be programmed:
- Event mode
- Units for speed selectable (Steps/Sec or RPM)
- Factor for speed calculation (e.g. measuring wheel circumference)
- Integration time for speed value of 1 to 32
- Two work areas with 2 upper and lower limits and the corresponding output states
- Variable PDO mapping for position, speed, acceleration and work area status
- Extended failure management for position sensing with integrated temperature control
- User interface with visual display of bus and failure status – 3 LED's
- Optional – 32 CAM's programmable
- Customer-specific memory – 16 Bytes

CANopen Lift Profile DS 417 V1.1

The following functionality is integrated:
- Car position unit
- Two virtual devices
- One virtual device delivers the position in absolute measuring steps (steps)
- One virtual device delivers the position as an absolute travel information in millimeters
- Lift number programmable
- Independent setting of the node address in relation with the CAN identifier
- Factor for speed calculation (e.g., measuring wheel circumference)
- Integration time for speed value of 1 to 32
- Two work areas with 2 upper and lower limits and the corresponding output states
- Variable PDO mapping for position, speed, acceleration, work area status
- Extended failure management for position sensing with integrated temperature control
- User interface with visual display of bus and failure status – 3 LEDs

Key features:
The object 6003h "Preset" is assigned to an integrated key, accessible from the outside "Watchdog-controlled" device.

Turck Inc. | 3000 Campus Drive, Minneapolis, MN 55441 | T +1 800 544 7769 | F +1 763 553 0708 | www.turck.com

Absolute, Multiturn Type RM-29 (Shaft) / RM-36 (Blind Hollow Shaft) CANopen/CANlift

Standard Wiring:
Bus Terminal Cover with Terminal Box (Connection TB)

Direction	OUT					IN				
Signal:	CAN Ground	CAN_Low (-)	CAN_High (+)	Common (0 V) power supply	+V power supply	Common (0 V) power supply	+V power supply	CAN_Low (-)	CAN_High (+)	CAN Ground
Abbrv:	CG	CL	CH	0 V	+V	0 V	+V	CL	CH	CG

Cable Connection (Connection BC)

Direction	IN				
Signal:	Common (0 V) power supply	+V power supply	CAN_Low (-)	CAN_High (+)	CAN Ground
Abbrv:	0 V	+V	CL	CH	CG
Cable:	WH	BN	YE	GN	GY

M23 Connector or M12 Connector or D-Sub 9 (Connection B1M23) (Connection B1M12) (Connection B1D9)

Direction	IN					Pinout
Signal:	Common (0 V) power supply	+V power supply	CAN_Low (-)	CAN_High (+)	CAN Ground	
Abbrv:	0 V	+V	CL	CH	CG	
M23 Multifast:	10	12	2	7	3	A
M12 Eurofast:	3	2	5	4	1	C
D-Sub 9:	6	9	2	7	3	-

Bus Terminal Cover with 2 - M12, 2 - M12, 2 - M23 (Connection R2M12) (Connection B2M12) (Connection B2M23)

Direction	OUT					Pinout	IN					Pinout
Signal:	**CAN Ground**	**CAN_Low (-)**	**CAN_High (+)**	**0 V power supply**	**+V power supply**		**0 V power supply**	**+V power supply**	**CAN_Low (-)**	**CAN_High (+)**	**CAN Ground**	
Abbrv:	CG	CL	CH	0 V	+V		0 V	+V	CL	CH	CG	
M23 Multifast:	3	2	7	10	12	A	10	12	2	7	3	A
M12 Eurofast:	1	5	4	3	2	B	3	2	5	4	1	C

Terminal Assignment Incremental Track (Connection R3M12 = Connection R2M12 plus 1-M12 for Incremental output)

Signal:	A	Ā	B	B̄	0 V	Pinout
Pin:	1	2	3	4	5	D

Wiring Diagrams:

A	B	C	D
Male Encoder View	**Female Encoder View**	**Male Encoder View**	**Male Encoder View**
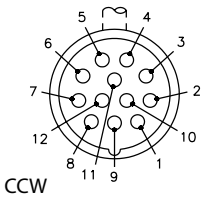 CCW	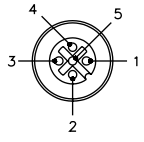	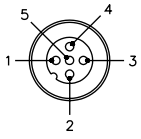	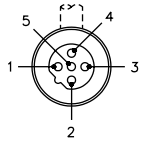
Bus In and Out M23 Multifast Pinout	**Bus Out** M12 Eurofast Pinout	**Bus In** M12 Eurofast Pinout	**Incremental Track** M12 Eurofast Pinout
Mating Cordset: [1] Consult factory	Mating Cordset: [1] **RSC 572-*M/S3118**	Mating Cordset: [1] **RKC 572-*M/S3117**	Mating Cordset: [1] **WASW 4.5T-*/S618**

[1] See Connectivity section H for corresponding cable color code.
* Length in meters. Available in 0.1 meter increments ≥0.2 meters.

We reserve the right to make technical alterations without prior notice.

Absolute, Multiturn Type RM-29 (Shaft) / RM-36 (Blind Hollow Shaft) CANopen/CANlift

Part Number Key: RM-29 Shaft Version

A	B	C		D		E		F
RM-29S	6	C	-	9D28B	-	B1M12	/	N46

A	Type
RM-29S	Ø 58 mm, Shaft, IP67 Shaft Seal
RM-29T	Ø 58 mm, Shaft, IP65 Shaft Seal

B	Shaft (Ø x L)
6	Ø 6 mm x 10 mm
10	Ø 10 mm x 20 mm
A0	Ø 1/4" x 7/8"
A1	Ø 3/8" x 7/8"

C	Flange
C	Ø 58 mm Clamping Flange
S	Ø 58 mm Servo Flange
R	2.5" Square Flange

D	Voltage Supply and Output Type
9D28B	10-30 VDC, CANopen DS 301 V4.02
9G28B	10-30 VDC, CANopen DS 301 V4.02 w/ 2048PPR Incremental Track (TTL-Compatible) [1]

[1] Only available with connector R3M12.

E	Type of Connection
B1M12	Radial 1 x M12 Eurofast Connector w/o Bus Terminal Cover
R2M12	Radial 2 x M12 Eurofast Connectors w/ Bus Terminal Cover
R3M12	Radial 3 x M12 Eurofast Connectors w/ Bus Terminal Cover [2]
B1M23	Radial 1 x M23 Multifast Connector w/o Bus Terminal Cover
B2M23	Radial 2 x M23 Multifast Connectors w/o Bus Terminal Cover
B1D9	Radial 1 x 9-pin D-SUB Connector w/o Bus Terminal Cover
BC	Radial Cable (2 m PVC) w/o Bus Terminal Cover
RC	Radial Cable Gland w/ Bus Terminal Cover

[2] Only valid with Incremental track output option 9G28B

F	Options [3]
N46	SET Button
N47	CANlift DS 417 V1.01

[3] CAN parameters can be factory-preset

Part Number Key: RM-36 Blind Hollow Shaft Version

A	B	C		D		E		F
RM-36B	10	T	-	9D28B	-	B1M12	/	N46

A	Type
RM-36B	Ø 58 mm, Blind Hollow Shaft, IP67 Shaft Seal
RM-36C	Ø 58 mm, Blind Hollow Shaft, IP65 Shaft Seal

B	Bore (30 mm Insertion Depth)
10	Ø 10 mm
12	Ø 12 mm
14	Ø 14 mm
15	Ø 15 mm
A1	Ø 3/8"
A3	Ø 1/2"

C	Flange
T	Ø 50 mm Flange w/ Torque Stop
E	Ø 63 mm Flange w/ Slotted Flex Mount
E1	Ø 65 mm Flange w/ Flex Mount

D	Voltage Supply and Output Type
9D28B	10-30 VDC, CANopen DS 301 V4.02
9G28B	10-30 VDC, CANopen DS 301 V4.02 w/ 2048PPR Incremental Track (TTL-Compatible) [1]

[1] Only available with connector R3M12.

E	Type of Connection
B1M12	Radial 1 x M12 Eurofast Connector w/o Bus Terminal Cover
R2M12	Radial 2 x M12 Eurofast Connectors w/ Bus Terminal Cover
R3M12	Radial 3 x M12 Eurofast Connectors w/ Bus Terminal Cover [2]
B1M23	Radial 1 x M23 Multifast Connector w/o Bus Terminal Cover
B2M23	Radial 2 x M23 Multifast Connectors w/o Bus Terminal Cover
B1D9	Radial 1 x 9-pin D-SUB Connector w/o Bus Terminal Cover
BC	Radial Cable (2 m PVC) w/o Bus Terminal Cover
RC	Radial Cable Gland w/ Bus Terminal Cover

[2] Only valid with Incremental track output option 9G28B

F	Options [3]
N46	SET Button
N47	CANlift DS 417 V1.01

[3] CAN parameters can be factory-preset



Accessories:

- See page H1, Connectivity, for cables and connectors
- See page G1, Accessories, for mounting attachments and couplings

We reserve the right to make technical alterations without prior notice.

Absolute, Multiturn Type RM-29 (Shaft) / RM-36 (Blind Hollow Shaft) CANopen/CANlift

Dimensions: RM-29 Shaft Version

RM-29 Flange R
Connection RC

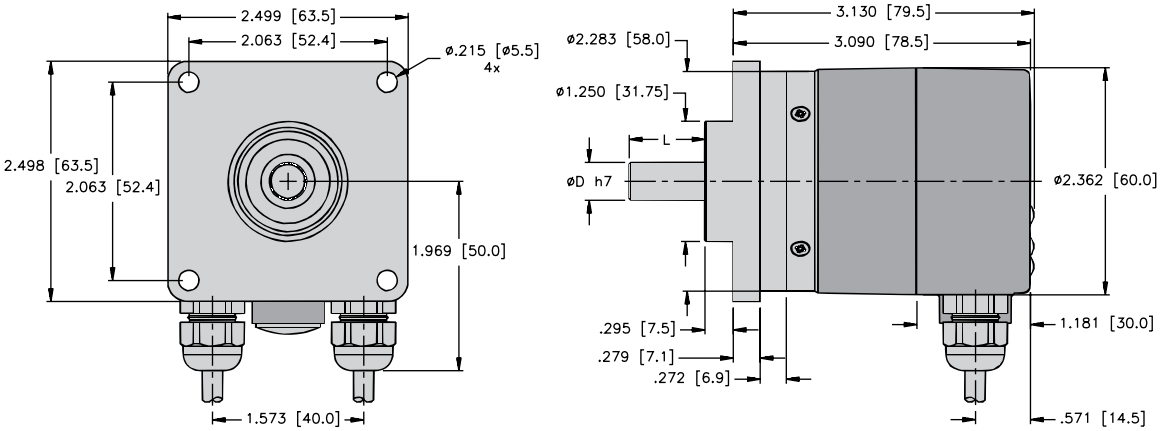

RM-29 Flange C
Connection R2M12

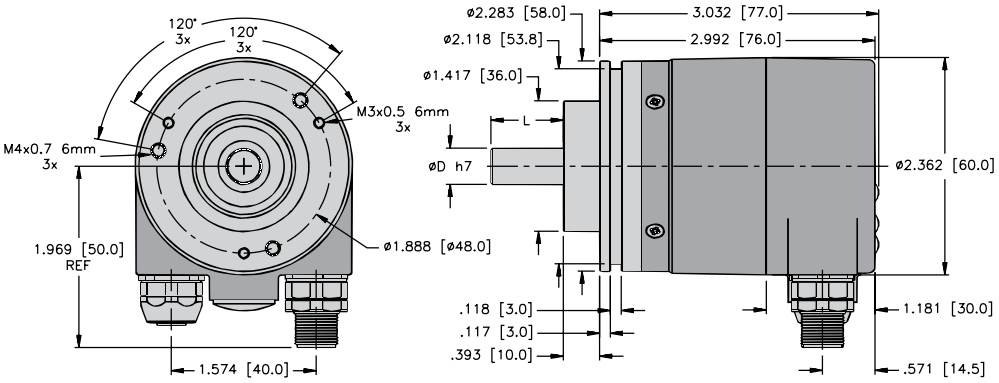

RM-29 Flange C
Connection BC

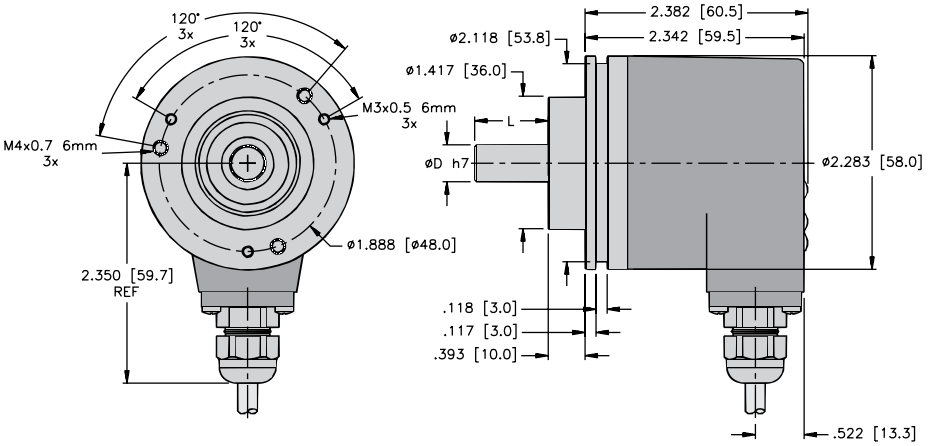

We reserve the right to make technical alterations without prior notice.

Absolute, Multiturn Type RM-29 (Shaft) / RM-36 (Blind Hollow Shaft) CANopen/CANlift

Dimensions: RM-29 Shaft Version

RM-29 Flange C
Connection B1M12

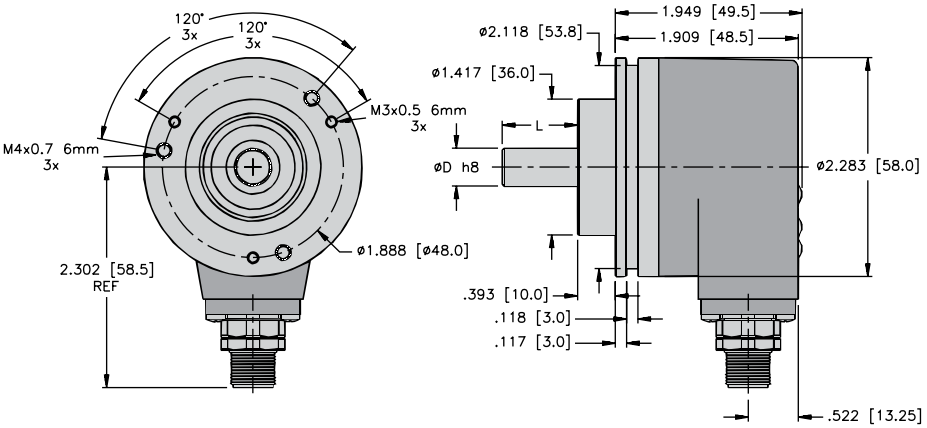

RM-29 Flange S
Connection B2M12

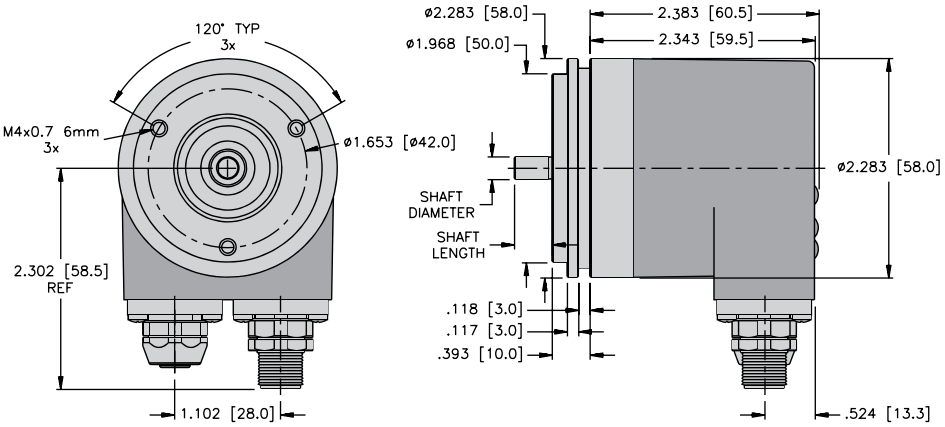

We reserve the right to make technical alterations without prior notice.

Turck Inc. | 3000 Campus Drive, Minneapolis, MN 55441 | T +1 800 544 7769 | F +1 763 553 0708 | www.turck.com

Sendix Absolute, Multiturn Type RM-29 (Shaft) / RM-36 (Blind Hollow Shaft) CANopen/CANlift

Dimensions: RM-29 Shaft Version

RM-29 Flange R
Connection B2M23

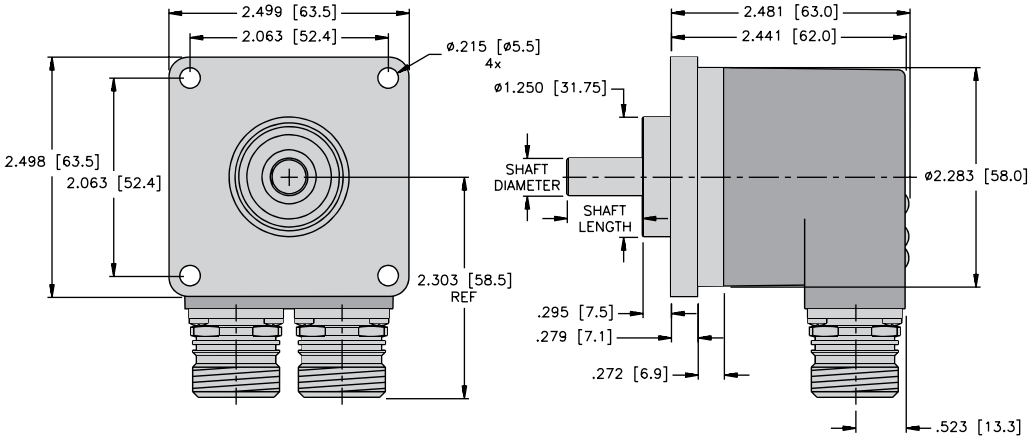

RM-29 Flange S
Connection B1D9

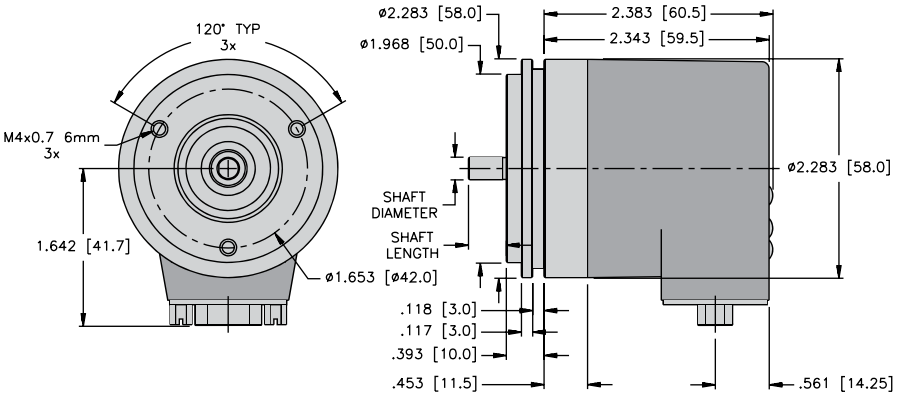

We reserve the right to make technical alterations without prior notice.

Absolute, Multiturn Type RM-29 (Shaft) / RM-36 (Blind Hollow Shaft) CANopen/CANlift

Dimensions: RM-36 Blind Hollow Shaft Version

RM-36 Flange E
Connection RC

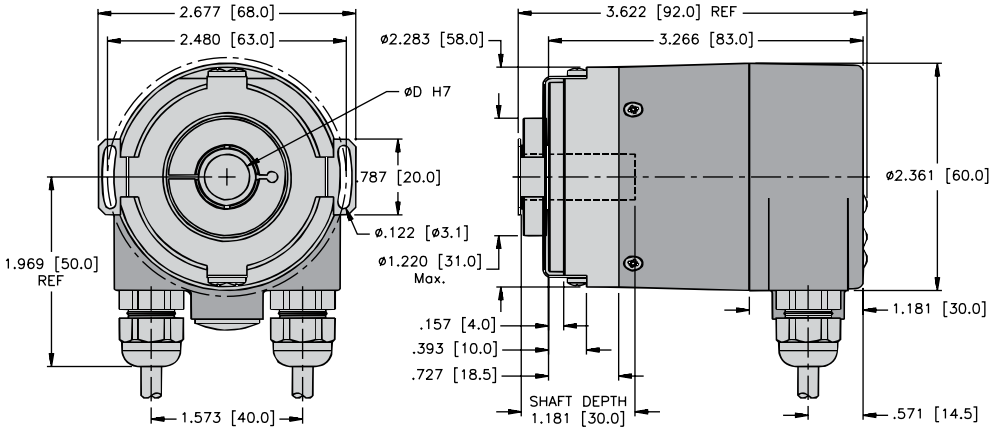

RM-36 Flange T
Connection R2M12

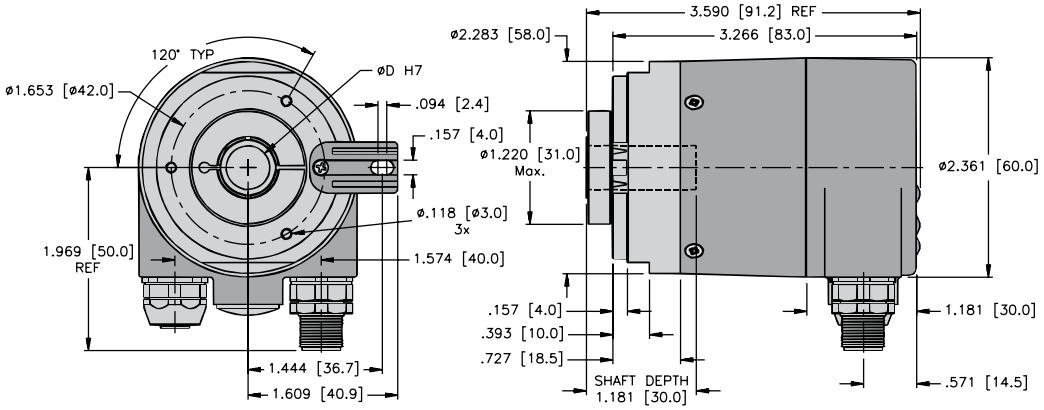

RM-36 Flange E1
Connection R2M12

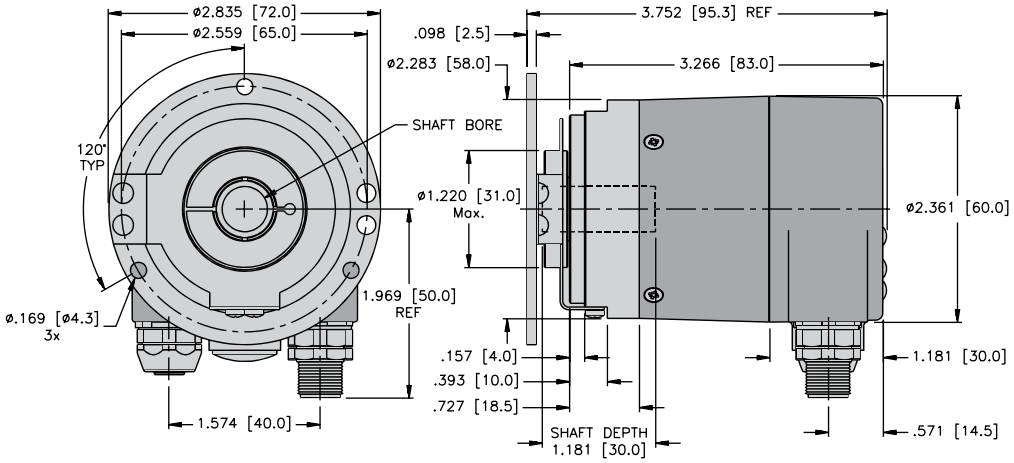

We reserve the right to make technical alterations without prior notice.

Turck Inc. | 3000 Campus Drive, Minneapolis, MN 55441 | T +1 800 544 7769 | F +1 763 553 0708 | www.turck.com

Absolute, Multiturn Type RM-29 (Shaft) / RM-36 (Blind Hollow Shaft) CANopen/CANlift

Dimensions: RM-36 Blind Hollow Shaft Version

RM-36 Flange E1
Connection BC

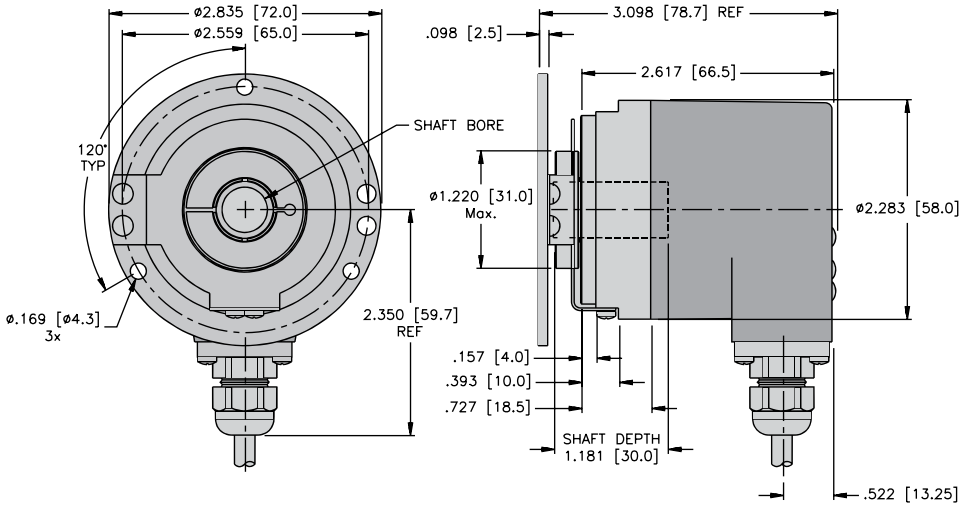

RM-36 Flange E
Connection B1M12

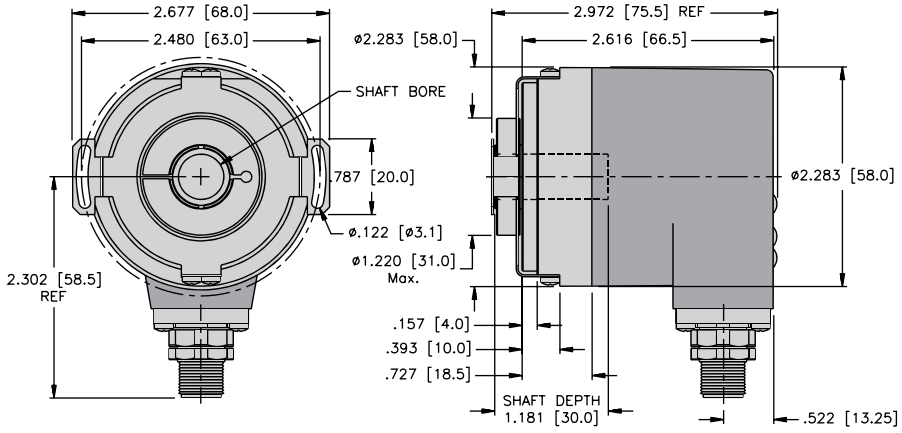

RM-36 Flange T
Connection B2M12

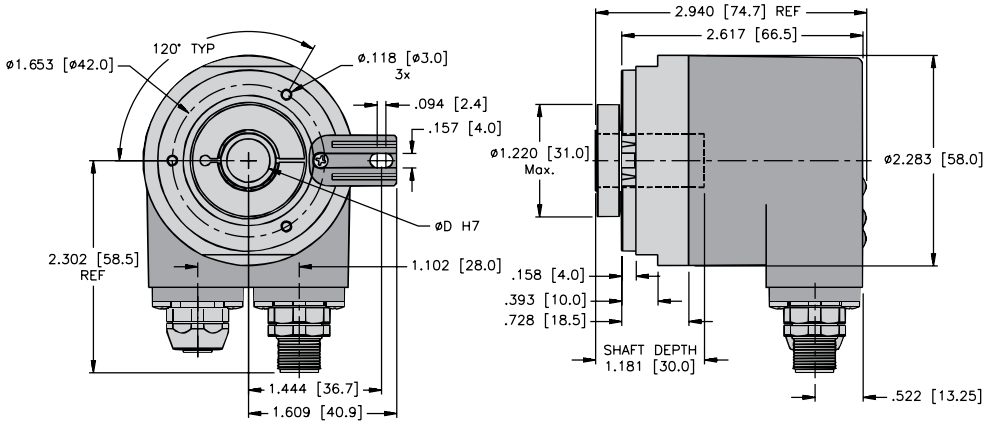

We reserve the right to make technical alterations without prior notice.

Absolute, Multiturn Type RM-29 (Shaft) / RM-36 (Blind Hollow Shaft) CANopen/CANlift

Dimensions: RM-36 Blind Hollow Shaft Version

RM-36 Flange T
Connection B1M23

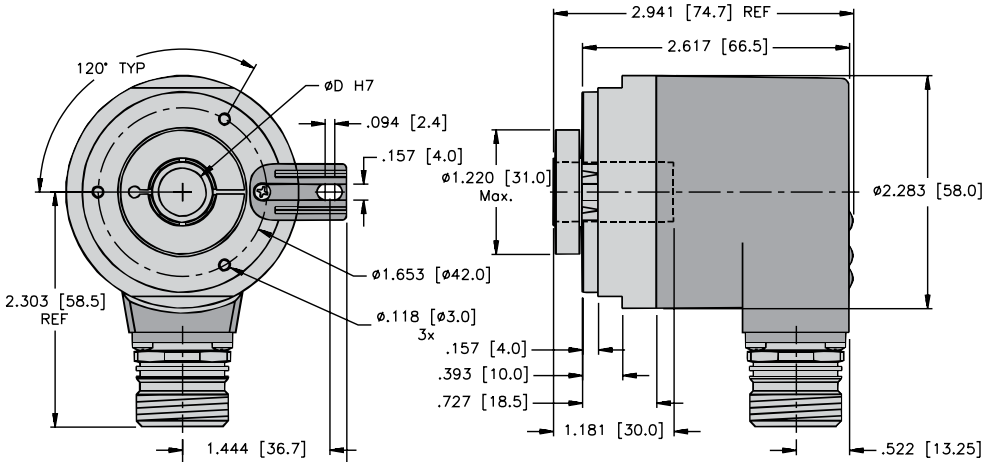

RM-36 Flange E1
Connection B2M23

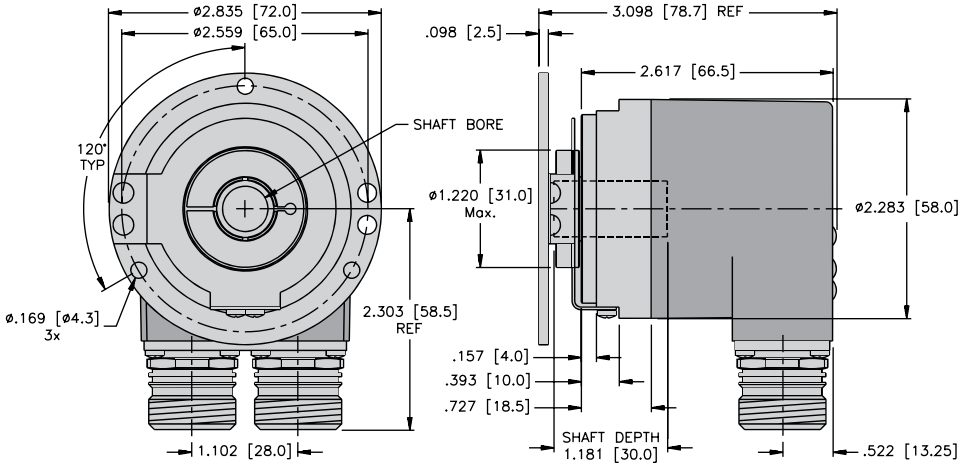

RM-36 Flange T
Connection B1D9

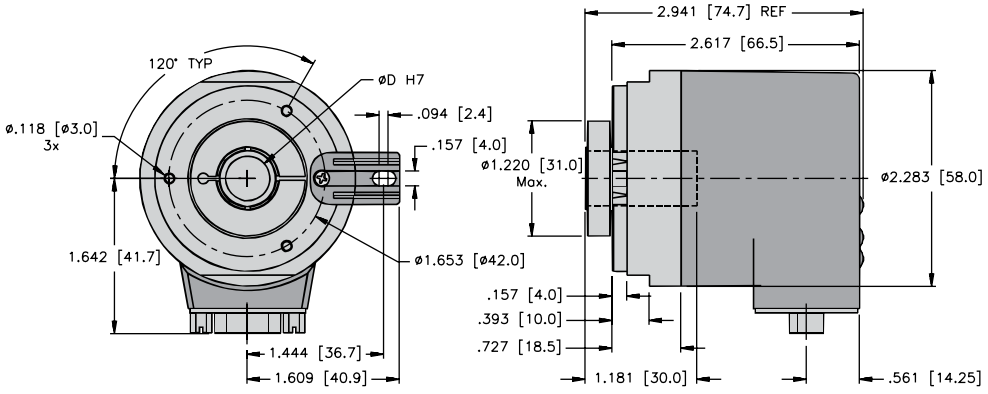

We reserve the right to make technical alterations without prior notice.

Absolute, Multiturn Type RM-29 (Shaft) / RM-36 (Blind Hollow Shaft) EtherCAT

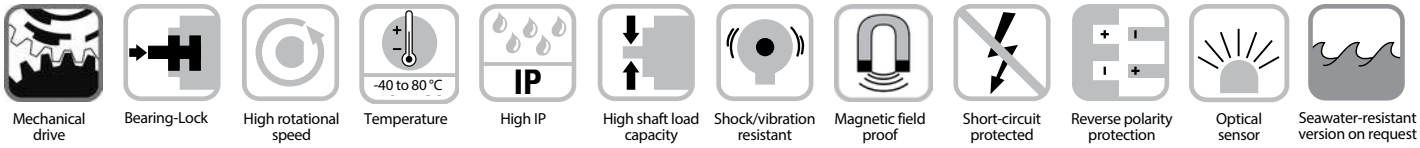

Mechanical drive | Bearing-Lock | High rotational speed | Temperature | High IP | High shaft load capacity | Shock/vibration resistant | Magnetic field proof | Short-circuit protected | Reverse polarity protection | Optical sensor | Seawater-resistant version on request

Reliable

- **Increased ability to withstand vibration and installation errors.** Sturdy Bearing-Lock design structure **eliminates machine downtime and repairs.**
- **Fewer components and connection points increase the operational reliability:** Turck OptoASIC technology with highest integration density (Chip-on-Board).
- Die cast housing and protection up to IP67: **Remains sealed even when subjected to harsh everyday use.**
- Wide temperature range: -40 to +176 °F (-40 to +80 °C).



Absolute

EtherCAT

Fast

- **Real time-servo position detection of several axes:** Distributed clock for real-time position detection.
- **Fast data availability with reduced loading on the bus and controller:** Intelligent functions such as transmission of speed/velocity, acceleration or leaving a working area.
- **Fast, simple, error-free connection:** Bus terminal cover with 3 x M12 connectors.

Versatile

- Up-to-the minute fieldbus performance: CAN over Ethernet.
- **Real-time data: Position, speed or working area.** Variable PDO mapping in the memory.
- **Fast, error-free start-up, without setting any switches:** All parameters can be programmed via the bus.
- **Numerous special functions:** Temperature monitoring, operating time, customer data.

Mechanical Characteristics:

Max. speed without shaft sealing (IP65) up to 158 °F (70 °C): Max. speed without shaft sealing (IP65) up to Tmax: Max. speed with shaft sealing (IP67) up to 158 °F (70 °C): Max. speed with shaft sealing (IP67) up to Tmax:	9,000 RPM, continuous 7,000 RPM 7,000 RPM, continuous 4,000 RPM 8,000 RPM, continuous 6,000 RPM 6,000 RPM, continuous 3,000 RPM
Starting torque without shaft seal (IP65):	1.4 oz-in (< 0.01 Nm)
Starting torque with shaft seal (IP67):	Shaft version: 7 oz-in (< 0.05 Nm) Hollow shaft version: 4.25 oz-in (< 0.03 Nm)
Moment of inertia:	Shaft version: 0.16 oz-in^2 (3.0 x 10^{-6} kgm^2) Hollow shaft version: 0.41 oz-in^2 (7.5 x 10^{-6} kgm^2)
Radial load capacity of shaft:	18 lbs (80 N)
Axial load capacity of shaft:	9 lbs (40 N)
Weight:	approx. 1.19 lbs (0.54 kg)
Protection acc. to EN 60 529:	Housing: IP67, Shaft: IP65, opt. IP67
Working temperature:	-40 to +176 °F (-40 to +80 °C)
Materials:	Shaft: stainless steel, Flange: aluminum, Housing: die cast zinc,
Shock resistance acc. to DIN-IEC 68-2-27:	> 250 g (> 2,500 m/s^2), 6 ms
Vibration resistance acc. to DIN-IEC 68-2-6:	> 10 g (> 100 m/s^2), 55-2,000 Hz



- Safe operation in strong magnetic fields
- Special gears with specific toothing

We reserve the right to make technical alterations without prior notice.

Absolute, Multiturn Type RM-29 (Shaft) / RM-36 (Blind Hollow Shaft) EtherCAT

General Electrical Characteristics:

Supply voltage:	10-30 VDC
Current consumption (without output load):	Max. 120 mA
Reverse polarity protection at power supply (+V):	Yes
RoHS compliant according to EU guideline 2011/65/EU	
UL approval:	file E356899

Device Characteristics:

Singleturn resolution Default value:	1-65535 (16 bit), (scalable: 1-65535) 8192 (13 bit)
Total resolution:	scalable from 1 to 268435456 (28 bit) 12 Bit Multiturn
Code:	Binary
Interface:	EtherNet/EtherCAT

Diagnostic LED (Red)

LED is ON with the following fault conditions:
Sensor error (internal code or LED error), low voltage, over-temperature

Run LED (Green)

LED is ON with the following conditions:
Preop-, Safeop and Op-State (EtherCat status machine)

2 x Link LED (Yellow)

LED is ON with the following conditions (Port A and B):
Link detected

Modes

Freerun, Distributed Clock (cycle time for Sync 0 pulse min. 125 µs or 62.5 µs with restrictions), Sync-Mode

General Information about CoE (CAN over EtherCAT)

The EtherCAT encoders support the CANopen communication profile according to DS 301. In addition, device-specific profiles like the encoder profile DS 406 are available.

Scaling, preset values, limit switch values and many other parameters may be programmed via the EtherCAT bus. When switching the device on, all parameters are loaded from an EEPROM, where they were saved to protect them against power failure.

Position, speed, acceleration, temperature and working area status output may be combined as PDO mapping).

CANopen Encoder Profile CoE (CAN over EtherCAT)

The following parameters are programmable:
- Units for speed selectable (Steps/Sec or RPM)
- Factor for speed calculation (e.g., circumference of measuring wheel)
- Integration time for the speed value from 1 to 32
- Two working area with 2 upper and lower limits and the corresponding output states
- PDO mapping of position, speed/velocity, acceleration and working area
- Extended error management for position sensing with integrated temperature control
- User interface with visual display of bus and fault status – 4 LEDs
- Alarm and warning messages

Standard Wiring (Bus): (M12 Eurofast Connector D-Coded)

Direction:	Port A				Port B			
Signal:	Transmit data+	Receive data+	Transmit data-	Receive data-	Transmit data+	Receive data+	Transmit data-	Receive data-
Abbrv:	TxD+	RxD+	TxD-	RxD-	TxD+	RxD+	TxD-	RxD-
M12 Eurofast:	1	2	3	4	1	2	3	4

Standard Wiring (Power Supply): M12 Eurofast Connector

Signal:	Power supply	N/C	Common	N/C
Abbrv:	+V	-	0 V	-
M12 Eurofast:	1	2	3	4

Wiring Diagrams:

Bus	Power Supply
Female Encoder View	Male Encoder View
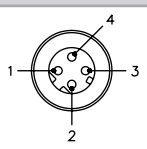	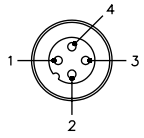
M12 Eurofast Pinout	M12 Eurofast Pinout
Mating Cordset: **RSSD 441-***	Mating Cordset: **RK 4.4T-***

We reserve the right to make technical alterations without prior notice.

Absolute, Multiturn Type RM-29 (Shaft) / RM-36 (Blind Hollow Shaft) EtherCAT

Part Number Key: RM-29 Shaft Version

A	B	C		D		E
RM-29S	6	C	-	9C28B	-	R3M12

A	Type
RM-29S	Ø 58 mm, Shaft, IP67 Shaft Seal
RM-29T	Ø 58 mm, Shaft, IP65 Shaft Seal

B	Shaft (Ø x L)
6	Ø 6 mm x 10 mm
10	Ø 10 mm x 20 mm
A0	Ø 1/4" x 7/8"
A1	Ø 3/8" x 7/8"

C	Flange
C	Ø 58 mm Clamping Flange
S	Ø 58 mm Servo Flange
R	2.5" Square Flange

D	Voltage Supply and Output Type
9C28B	10-30 VDC, EtherCAT

E	Type of Connection
R3M12	Radial 3 x M12 Eurofast Connectors w/ Bus Terminal Cover

Part Number Key: RM-36 Blind Hollow Shaft Version

A	B	C		D		E
RM-36B	10	T	-	9C28B	-	R3M12

A	Type
RM-36B	Ø 58 mm, Blind Hollow Shaft, IP67 Shaft Seal
RM-36C	Ø 58 mm, Blind Hollow Shaft, IP65 Shaft Seal

B	Bore (30 mm Insertion Depth)
10	Ø 10 mm
12	Ø 12 mm
14	Ø 14 mm
15	Ø 15 mm
A1	Ø 3/8"
A3	Ø 1/2"

C	Flange
T	Ø 50 mm Flange w/ Torque Stop
E	Ø 63 mm Flange w/ Slotted Flex Mount
E1	Ø 65 mm Flange w/ Flex Mount

D	Voltage Supply and Output Type
9C28B	10-30 VDC, EtherCAT

E	Type of Connection
R3M12	Radial 3 x M12 Eurofast Connectors w/ Bus Terminal Cover

Accessories:

- See page H1, Connectivity, for cables and connectors
- See page G1, Accessories, for mounting attachments and couplings

We reserve the right to make technical alterations without prior notice.

Absolute, Multiturn Type RM-29 (Shaft) / RM-36 (Blind Hollow Shaft) EtherCAT

Dimensions: RM-29 Shaft Version

RM-29 Flange S
Connection R3M12

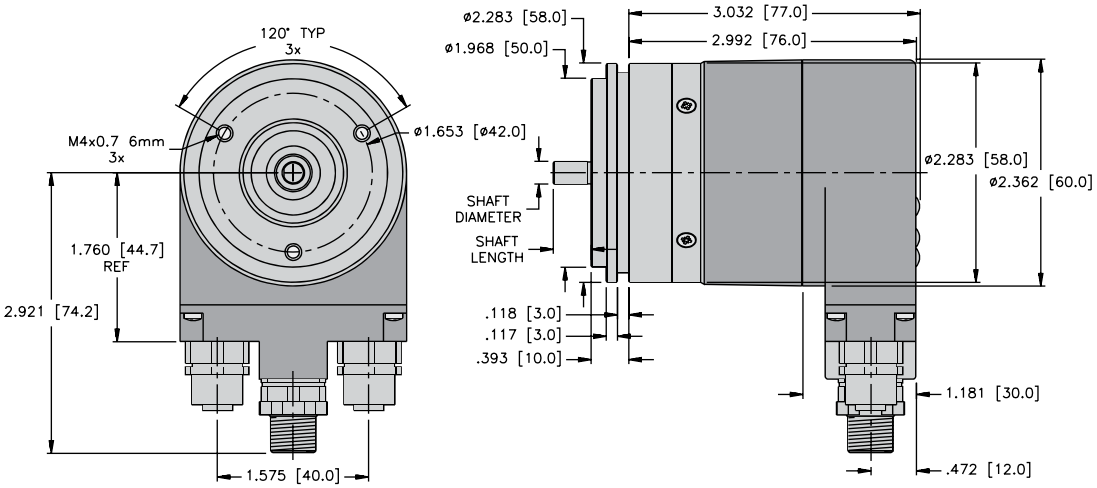

RM-29 Flange C
Connection R3M12

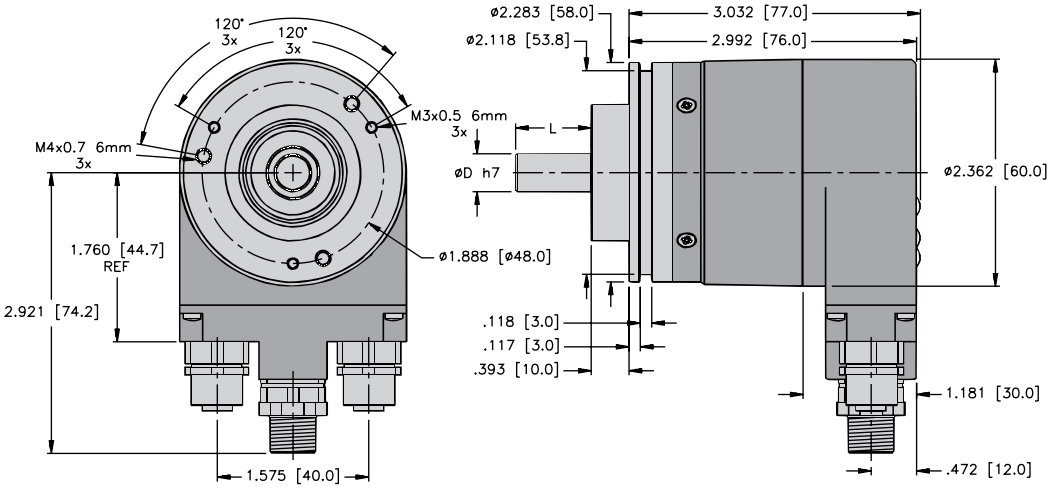

RM-29 Flange R
Connection R3M12

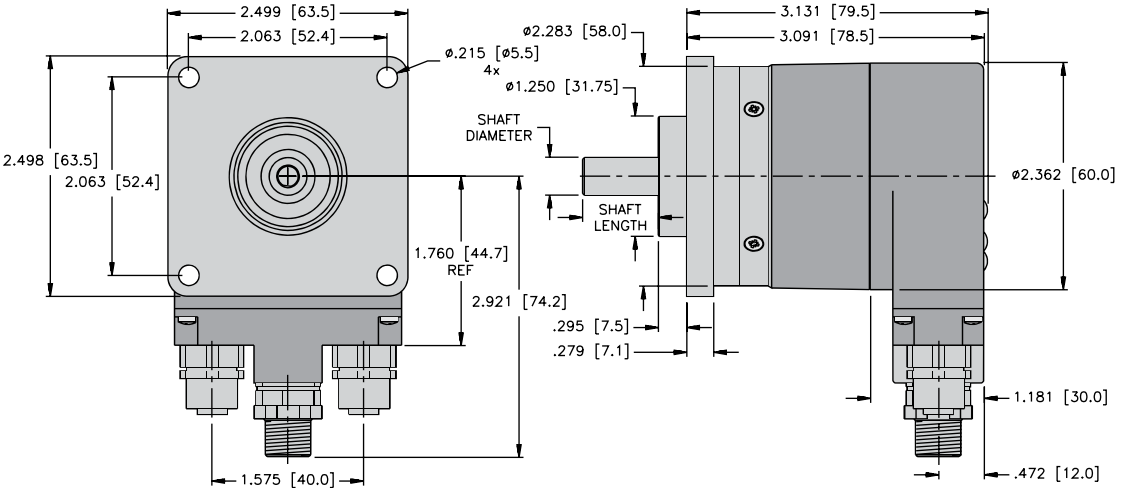

We reserve the right to make technical alterations without prior notice.

Absolute, Multiturn Type RM-29 (Shaft) / RM-36 (Blind Hollow Shaft) EtherCAT

Dimensions: RM-36 Blind Hollow Shaft Version

RM-36 Flange T
Connection R3M12

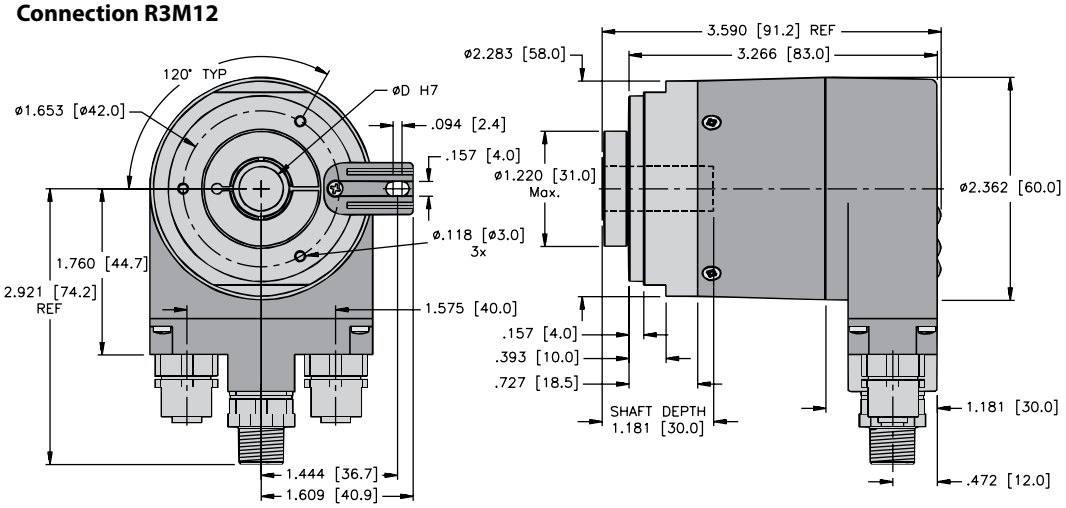

RM-36 Flange E
Connection R3M12

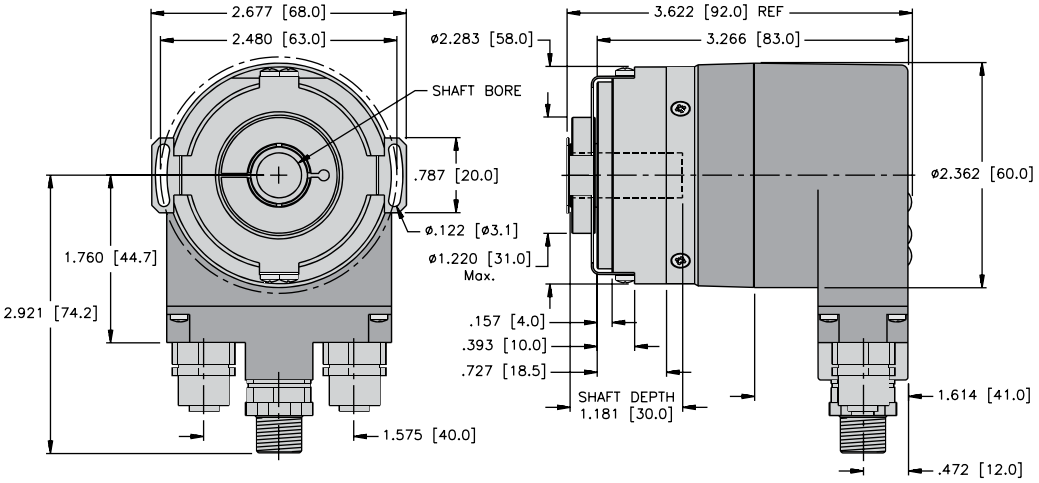

RM-36 Flange E1
Connection R3M12

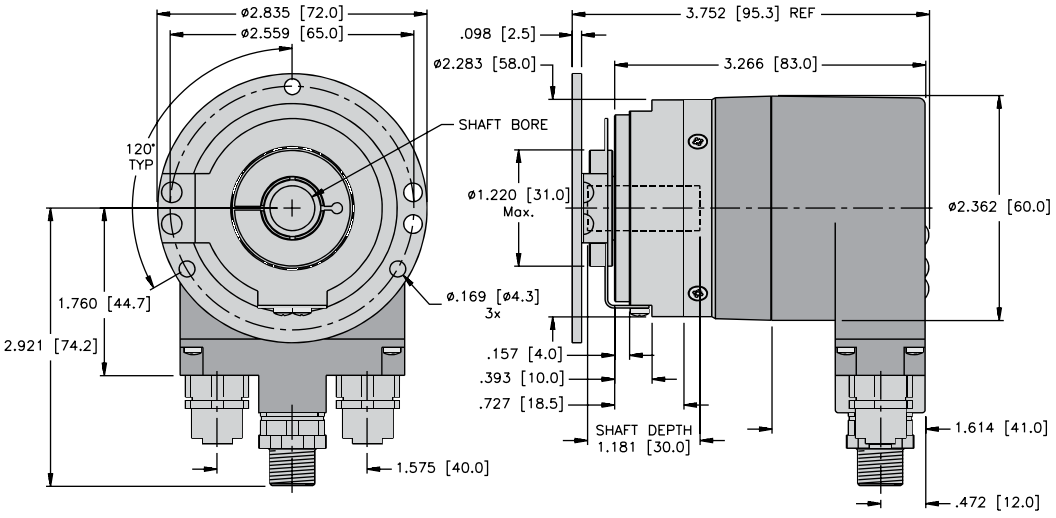

We reserve the right to make technical alterations without prior notice.

Absolute, Multiturn Type RM-29 (Shaft) / RM-36 (Blind Hollow Shaft) PROFIBUS-DP



Mechanical drive | Bearing-Lock | High rotational speed | Temperature | High IP | High shaft load capacity | Shock/vibration resistant | Magnetic field proof | Short-circuit protected | Reverse polarity protection | Optical sensor | Seawater-resistant version on request

Reliable

- **Increased ability to withstand vibration and installation errors.** Sturdy Bearing-Lock design structure **eliminates machine downtime and repairs.**
- **Fewer components and connection points increase the operational reliability:** Turck OptoASIC technology with highest integration density (Chip-on-Board).
- Die cast housing and protection up to IP67: **Remains sealed even when subjected to harsh everyday use.**
- Wide temperature range.
- **Immediate recognition of bus operation.**

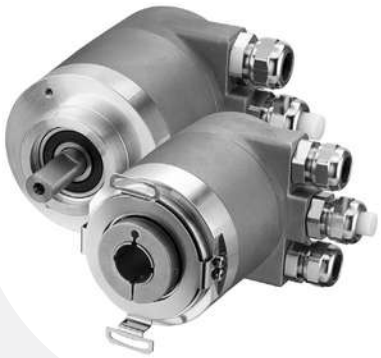

Absolute

Fast

- **Fast data availability with reduced loading on the bus and controller:** Intelligent functions like the transmission of speed, acceleration or exiting a working area.
- **Fast, simple, error-free connection.**

Versatile

- **Up-to-the minute fieldbus performance:** PROFIBUS-DPV0 supports Class I and II.
- **Connection options:** Bus cover with M12 connector or cable connection.
- **Fast start-up** with pre-defined GSD file: A variety of scaling options, 16 bit singleturn resolution, 12 bit multiturn resolution.
- Comprehensive diagnostics, programmable to Class II.

Mechanical Characteristics:

Max. speed without shaft sealing (IP65) up to 158 °F (70 °C): Max. speed without shaft sealing (IP65) up to Tmax: Max. speed with shaft sealing (IP67) up to 158 °F (70 °C): Max. speed with shaft sealing (IP67) up to Tmax:	9,000 RPM, continuous 7,000 RPM 7,000 RPM, continuous 4,000 RPM 8,000 RPM, continuous 6,000 RPM 6,000 RPM, continuous 3,000 RPM
Starting torque without shaft seal (IP65):	1.4 oz-in (< 0.01 Nm)
Starting torque with shaft seal (IP67):	4.25 oz-in (< 0.03 Nm)
Moment of inertia:	Shaft version: 0.219 oz-in^2 (4.0×10^{-6} kgm^2) Hollow shaft version: 0.41 oz-in^2 (7.5×10^{-6} kgm^2)
Radial load capacity of shaft:	18 lbs (80 N)
Axial load capacity of shaft:	9 lbs (40 N)
Weight:	approx. 1.26 lbs (0.57 kg) with bus terminal cover approx. 1.15 lbs (0.52 kg) with fixed connection
Protection acc. to EN 60 529:	Housing: IP67, Shaft: IP65, opt. IP67
Working temperature:	-40 to +176 °F (-40 to +80 °C)
Materials:	Shaft: stainless steel, Flange: aluminum, Housing: die cast zinc
Shock resistance acc. to DIN-IEC 68-2-27:	> 250 g (> 2,500 m/s^2), 6 ms
Vibration resistance acc. to DIN-IEC 68-2-6:	> 10 g (> 100 m/s^2), 55-2,000 Hz



- Safe operation in strong magnetic fields
- Special gears with specific toothing

We reserve the right to make technical alterations without prior notice.

Turck Inc. | 3000 Campus Drive, Minneapolis, MN 55441 | T +1 800 544 7769 | F +1 763 553 0708 | www.turck.com

Absolute, Multiturn Type RM-29 (Shaft) / RM-36 (Blind Hollow Shaft) PROFIBUS-DP

General Electrical Characteristics:

Supply voltage:	10-30 VDC
Current consumption (w/o output load):	Max. 120 mA
Reverse polarity protection:	Yes at power supply (+V)
RoHS compliant according to EU guideline 2011/65/EU	
UL approval:	file E356899

SET control button (zero or defined value, option):

Protected against accidental activation, can only be depressed with the tip of a ballpoint pen or similar.

Diagnostic LED (yellow):

LED on with: sensor error (PROFIBUS error)

Interface Characteristics PROFIBUS-DP:

Singleturn resolution	1-65536 (16 bits), default 8192 (13 bits)
Total resolution:	28 bit (scalable 1-2^{28} steps)
Number of Revolutions:	4096 (12 bits), (scalable 1-4096)
Code:	Binary
Interface:	Specification according to PROFIBUS-DP 2.0 Standard (DIN 19245 Part 3) RS485 driver galvanically isolated.

Protocol:	PROFIBUS Encoder Profile V1.1 Class 1 and Class 2 with manufacturer-specific enhancements
Baud rate:	Max. 12 Mbits/s
Node address:	1-127 (set by rotary switches)
Termination switchable:	Set by DIP switches

PROFIBUS Encoder-Profile V1.1

The PROFIBUS-DP device profile describes the functionality of the communication and the user-specific component within the PROFIBUS fieldbus system. The encoder profile is definitive. Here the individual objects are defined independent of the manufacturer. Furthermore, the profiles offer space for additional manufacturer-specific functions. This means that PROFIBUS compliant device systems can be used now with the guarantee that they are ready for the future as well.

The following parameters may be programmed:

- Direction of rotation
- Scaling
  Number of steps per revolution
  Number of revolutions
  Total resolution over Singleturn/Multiturn
- Preset value
- Diagnostics mode
- Position 16/32 Bit
- Speed UPM or Unit/s (16/32) Bit

The following functionality is integrated:

- Galvanic isolation of the bus stage with DC/DC converter
- Line driver according to RS485; max. 12 MB
- Address programmable via DIP switches
- Diagnostics LED
- Full Class I and Class II functionality

Standard Wiring Connection RC

Signal:	BUS IN				BUS OUT			
	B	A	Common (0 V)	+V	Common (0 V)	+V	B	A
Pin:	1	2	3	4	5	6	7	8

Connection R3M12

Bus In	**Signal:**	**-**	**BUS-A**	**-**	**BUS-B**	**Shield**
	Pin:	1	2	3	4	5

Power Supply	**Signal:**	**+V**	**-**	**Common (0 V)**	**-**
	Pin:	1	2	3	4

Bus Out	**Signal:**	**BUS-VDC** [1]	**BUS-A**	**BUS_GND** [1]	**BUS-B**	**Shield**
	Pin:	1	2	3	4	5

Wiring Diagrams:

Bus In	Power Supply	Bus Out
Male Encoder View	**Male Encoder View**	**Female Encoder View**
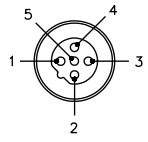	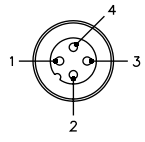	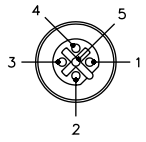
M12 Eurofast Pinout	M12 Eurofast Pinout	M12 Eurofast Pinout
Mating Cordset: [2] [3] **RKSW-590-*M**	Mating Cordset: [2] **RK 4.4T-***	Mating Cordset: [2] [3] **RSSW-590-*M**

[1] For powering an external PROFIBUS-DP terminating resistor.
[2] See Connectivity section H for corresponding cable color code.
[3] "S" denotes shield tied to coupling nut.
* Length in meters. Available in 0.1 meter increments ≥ 0.2 meters.

We reserve the right to make technical alterations without prior notice.

Absolute, Multiturn Type RM-29 (Shaft) / RM-36 (Blind Hollow Shaft) PROFIBUS-DP

Part Number Key: RM-29 Shaft Version

A	B	C		D		E		F
RM-29S	6	C	-	9A28B	-	R3M12	/	N46

A	Type
RM-29S	Ø 58 mm, Shaft, IP67 Shaft Seal
RM-29T	Ø 58 mm, Shaft, IP65 Shaft Seal

B	Shaft (Ø x L)
6	Ø 6 mm x 10 mm
10	Ø 10 mm x 20 mm
A0	Ø 1/4" x 7/8"
A1	Ø 3/8" x 7/8"

C	Flange
C	Ø 58 mm Clamping Flange
S	Ø 58 mm Servo Flange
R	2.5" Square Flange

D	Voltage Supply and Output Type
9A28B	10-30 VDC, PROFIBUS-DP V0 encoder Profile V1.1

E	Type of Connection
R3M12	Radial 3 x M12 Eurofast Connectors w/ Bus Terminal Cover
RC	Radial Cable Gland w/ Bus Terminal Cover

F	Options
(BLANK)	No Options
N46	SET Button

Part Number Key: RM-36 Blind Hollow Shaft Version

A	B	C		D		E		F
RM-36B	10	T	-	9A28B	-	R3M12	/	N46

A	Type
RM-36B	Ø 58 mm, Blind Hollow Shaft, IP67 Shaft Seal
RM-36C	Ø 58 mm, Blind Hollow Shaft, IP65 Shaft Seal

B	Bore (30 mm Insertion Depth)
10	Ø 10 mm
12	Ø 12 mm
14	Ø 14 mm
15	Ø 15 mm
A1	Ø 3/8"
A3	Ø 1/2"

C	Flange
T	Ø 50 mm Flange w/ Torque Stop
E	Ø 63 mm Flange w/ Slotted Flex Mount
E1	Ø 65 mm Flange w/ Flex Mount

D	Voltage Supply and Output Type
9A28B	10-30 VDC, PROFIBUS-DP V0 encoder Profile V1.1

E	Type of Connection
R3M12	Radial 3 x M12 Eurofast Connectors w/ Bus Terminal Cover
RC	Radial Cable Gland w/ Bus Terminal Cover

F	Options
(BLANK)	No Options
N46	SET Button

We reserve the right to make technical alterations without prior notice.

Accessories:

- See page H1, Connectivity, for cables and connectors
- See page G1, Accessories, for mounting attachments and couplings

Absolute, Multiturn Type RM-29 (Shaft) / RM-36 (Blind Hollow Shaft) PROFIBUS-DP

Dimensions: RM-29 Shaft Version

RM-29 Flange R
Connection RC

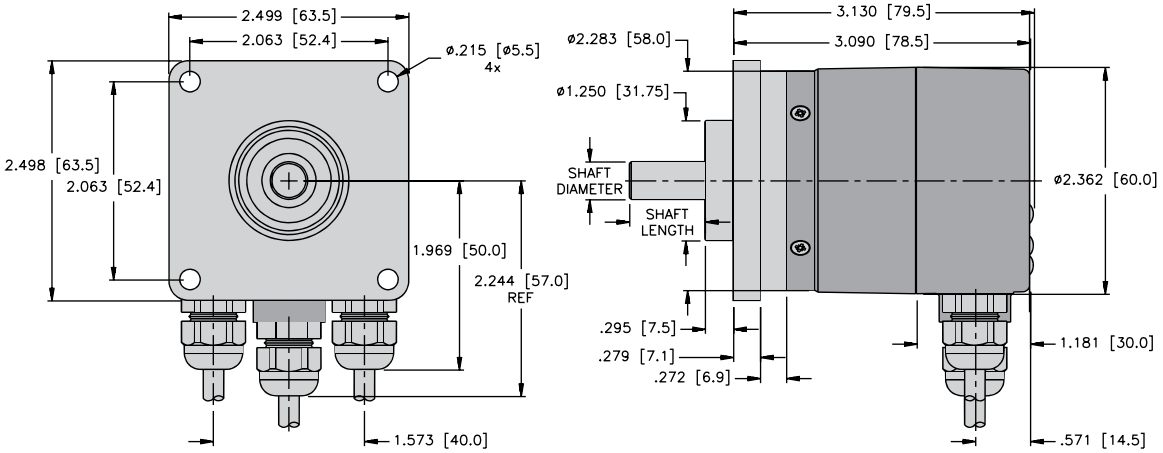

RM-29 Flange S
Connection RC

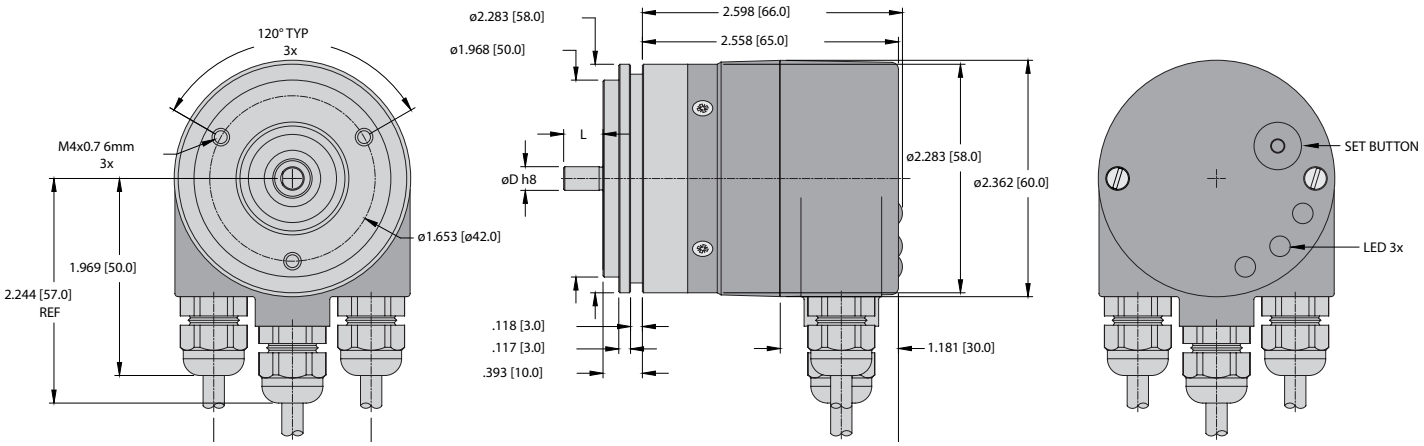

We reserve the right to make technical alterations without prior notice.

Absolute, Multiturn Type RM-29 (Shaft) / RM-36 (Blind Hollow Shaft) PROFIBUS-DP

Dimensions: RM-29 Shaft Version

RM-29 Flange C
Connection R3M12

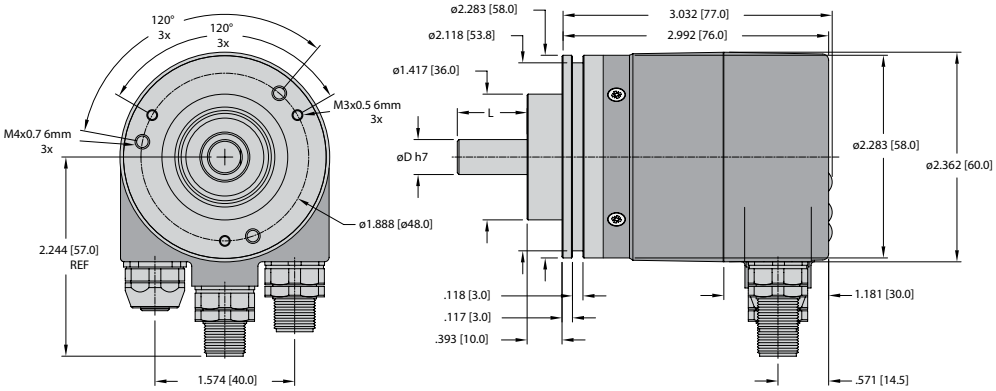

We reserve the right to make technical alterations without prior notice.

Turck Inc. | 3000 Campus Drive, Minneapolis, MN 55441 | T +1 800 544 7769 | F +1 763 553 0708 | www.turck.com

Absolute, Multiturn Type RM-29 (Shaft) / RM-36 (Blind Hollow Shaft) PROFIBUS-DP

Dimensions: RM-36 Blind Hollow Shaft Version

RM-36 Flange E
Connection RC

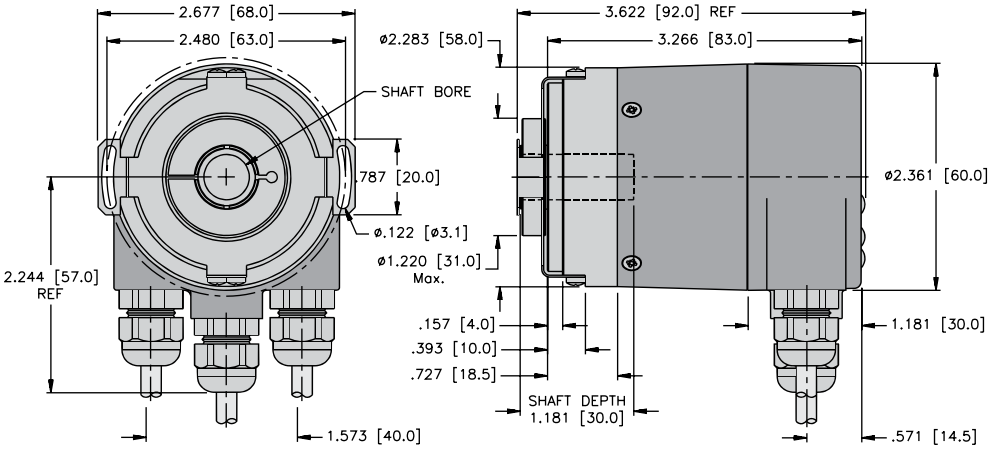

RM-36 Flange T
Connection R3M12

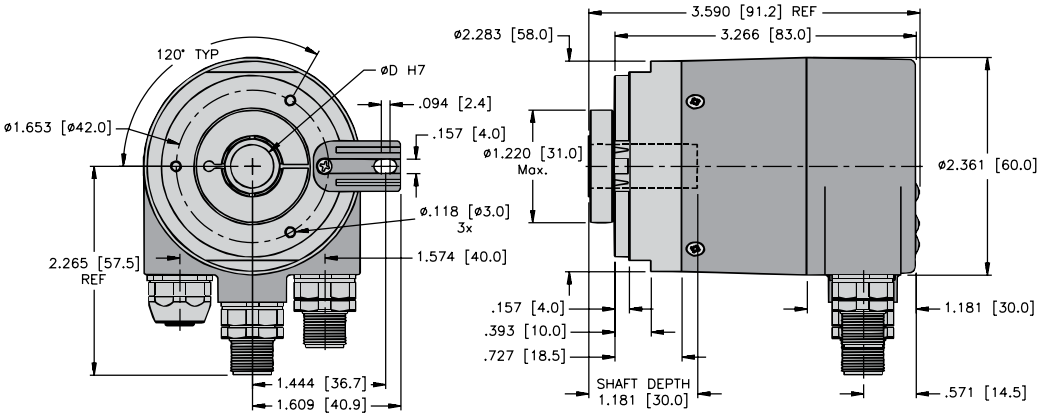

RM-36 Flange E1
Connection R3M12

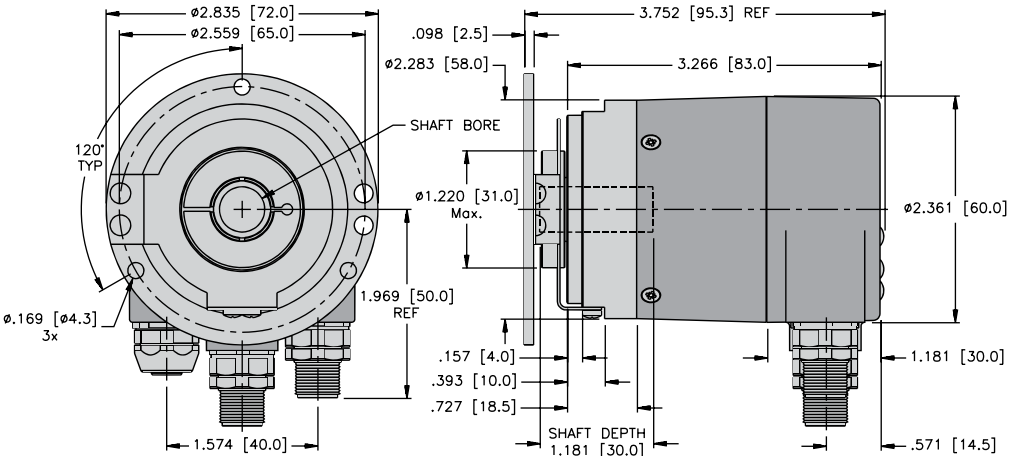

We reserve the right to make technical alterations without prior notice.

Absolute, Multiturn Type RM-29 (Shaft) / RM-36 (Blind Hollow Shaft) PROFINET IO

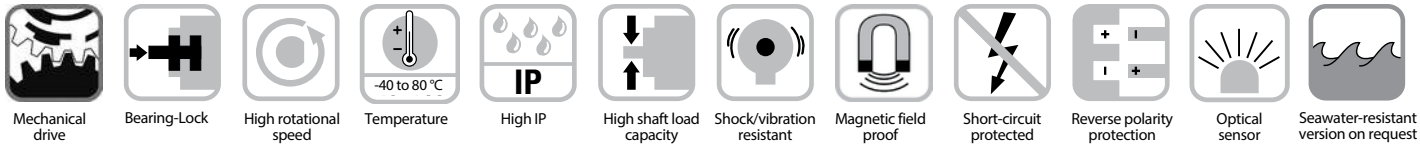

Mechanical drive | Bearing-Lock | High rotational speed | Temperature | High IP | High shaft load capacity | Shock/vibration resistant | Magnetic field proof | Short-circuit protected | Reverse polarity protection | Optical sensor | Seawater-resistant version on request

Reliable
- Ideally suited for all PROFINET applications thanks to the use of encoder profile 4.1.
- Perfect for use in harsh outdoor environments, as a result of IP67 protection and rugged housing construction.



Absolute

Fast
- Fast, simple, error-free connection.

Versatile
- IRT-Mode.
- Cycle time ≤ 1 ms
- Firmware updater allows for easy expansion of characteristics without having to disassemble the encoder.
- M12 connector ensures fast, simple, error-free connection

Mechanical Characteristics:

Max. speed without shaft sealing (IP65) up to 158 °F (70 °C): Max. speed without shaft sealing (IP65) up to Tmax: Max. speed with shaft sealing (IP67) up to 158 °F (70 °C): Max. speed with shaft sealing (IP67) up to Tmax:	9,000 RPM, continuous 7,000 RPM 7,000 RPM, continuous 4,000 RPM 8,000 RPM, continuous 6,000 RPM 6,000 RPM, continuous 3,000 RPM
Starting torque without shaft seal (IP65):	1.4 oz-in (< 0.01 Nm)
Starting torque with shaft seal (IP67):	Shaft version: 7 oz-in (< 0.05 Nm) Hollow shaft version: 4.25 oz-in (< 0.03 Nm)
Moment of inertia:	Shaft version: 0.16 oz-in^2 (3.0 x 10^{-6} kgm^2) Hollow shaft version: 0.41 oz-in^2 (7.5 x 10^{-6} kgm^2)
Radial load capacity of shaft:	18 lbs (80 N)
Axial load capacity of shaft:	9 lbs (40 N)
Weight:	approx. 1.19 lbs (0.54 kg)
Protection acc. to EN 60 529:	Housing: IP67, Shaft: IP65, opt. IP67
Working temperature:	-40 to +185 °F (-40 to +85 °C)
Materials:	Shaft: stainless steel, Flange: aluminum, Housing: die cast zinc
Shock resistance acc. to DIN-IEC 68-2-27:	> 250 g (> 2,500 m/s^2), 6 ms
Vibration resistance acc. to DIN-IEC 68-2-6:	> 10 g (> 100 m/s^2), 55-2,000 Hz

General Information about PROFINET

The PROFINET encoder implements the Encoder Profile 4.1. (according to the specification Encoder Version 4.1 Dec. 2008).
It permits scaling and preset values, as well as many other additional parameters to be programmed via the PROFINET-Bus.
When switching on, all parameters are loaded from an EEPROM, where they were saved previously to protect them against power-failure, or taken over by the controller in the start-up phase.
Position, speed and many other states of the encoder can be transmitted.

PROFINET IO

The complete encoder profile according to Profile Encoder Version 4.1 as well as the Identification and maintenance functionality Version 1.16 has been implemented. IM blocks 0, 1, 2, 3 and 4 are supported.
The **Media Redundancy Protocol** is implemented here. Basically, the advantage of MRP is that the functionality of the components, which are wired in a ring structure, is maintained in case of a failure or of a breakage of the wires in any location.

We reserve the right to make technical alterations without prior notice.

Absolute, Multiturn Type RM-29 (Shaft) / RM-36 (Blind Hollow Shaft) PROFINET IO

General Electrical Characteristics:

Supply voltage:	10-30 VDC
Current consumption (without output load):	Max. 200 mA
Reverse polarity protection at power supply (+V):	Yes
RoHS compliant according to EU guideline 2011/65/EU	
UL approval:	file E356899

Link 1 and 2, LED (green/yellow):

Green:	active
Yellow:	data transfer

Error LED (red)/PWR LED (green):

Functionality see manual

Device Characteristics:

Singleturn resolution Default value:	1-65535 (16 bit), (scalable: 1-65535) 8192 (13 bit)
Multiturn resolution:	Max. 4096 (12 bit) scalable only via the total resolution
Total resolution:	scalable from 1 to 268435456 (28 Bit)
Code:	Binary
Interface:	PROFINET IO

We reserve the right to make technical alterations without prior notice.

Standard Wiring (Bus):
(M12 Eurofast Connector, D-Coded)

Direction:	Port 1				Port 2			
Signal:	Transmit data+	Receive data+	Transmit data-	Receive data-	Transmit data+	Receive data+	Transmit data-	Receive data-
Abbrv:	TxD+	RxD+	TxD-	RxD-	TxD+	RxD+	TxD-	RxD-
M12 Eurofast:	1	2	3	4	1	2	3	4

Standard Wiring (Power Supply):
M12 Eurofast Connector

Signal:	Power Supply	N/C	Common	N/C
Abbrv:	+V	-	0 V	-
M12 Eurofast:	1	2	3	4

Wiring Diagrams:

Bus	Power Supply
Female Encoder View	Male Encoder View
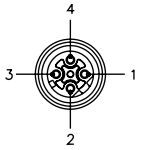	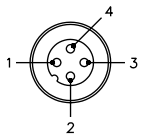
M12 Eurofast Pinout	M12 Eurofast Pinout
Mating Cordset: RSSD 420-*	Mating Cordset: RK 4.4T-*

Absolute, Multiturn Type RM-29 (Shaft) / RM-36 (Blind Hollow Shaft) PROFINET IO

Part Number Key: RM-29 Shaft Version

A	B	C		D		E
RM-29S	6	C	-	9E28B	-	R3M12

A	Type
RM-29S	Ø 58 mm, Shaft, IP67 Shaft Seal
RM-29T	Ø 58 mm, Shaft, IP65 Shaft Seal

B	Shaft (Ø x L)
6	Ø 6 mm x 10 mm
10	Ø 10 mm x 20 mm
A0	Ø 1/4" x 7/8"
A1	Ø 3/8" x 7/8"

C	Flange
C	Ø 58 mm Clamping Flange
S	Ø 58 mm Servo Flange
R	2.5" Square Flange

D	Voltage Supply and Output Type
9E28B	10-30 VDC, PROFINET IO

E	Type of Connection
R3M12	Radial 3 x M12 Eurofast Connectors w/ Bus Terminal Cover

We reserve the right to make technical alterations without prior notice.

Part Number Key: RM-36 Blind Hollow Shaft Version

A	B	C		D		E
RM-36B	10	T	-	9E28B	-	R3M12

A	Type
RM-36B	Ø 58 mm, Blind Hollow Shaft, IP67 Shaft Seal
RM-36C	Ø 58 mm, Blind Hollow Shaft, IP65 Shaft Seal

B	Bore (30 mm Insertion Depth)
10	Ø 10 mm
12	Ø 12 mm
14	Ø 14 mm
15	Ø 15 mm
A1	Ø 3/8"
A3	Ø 1/2"

C	Flange
T	Ø 50 mm Flange w/ Torque Stop
E	Ø 63 mm Flange w/ Slotted Flex Mount
E1	Ø 65 mm Flange w/ Flex Mount

D	Voltage Supply and Output Type
9E28B	10-30 VDC, PROFINET IO

E	Type of Connection
R3M12	Radial 3 x M12 Eurofast Connectors w/ Bus Terminal Cover

Accessories:

- See page H1, Connectivity, for cables and connectors
- See page G1, Accessories, for mounting attachments and couplings

Absolute, Multiturn Type RM-29 (Shaft) / RM-36 (Blind Hollow Shaft) PROFINET IO

Dimensions: RM-29 Shaft Version

RM-29 Flange S
Connection R3M12

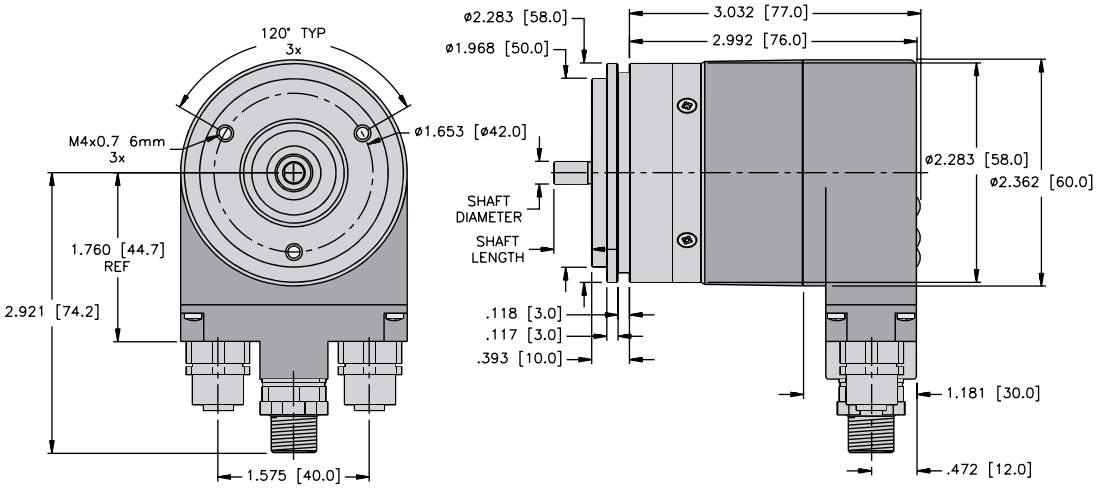

RM-29 Flange C
Connection R3M12

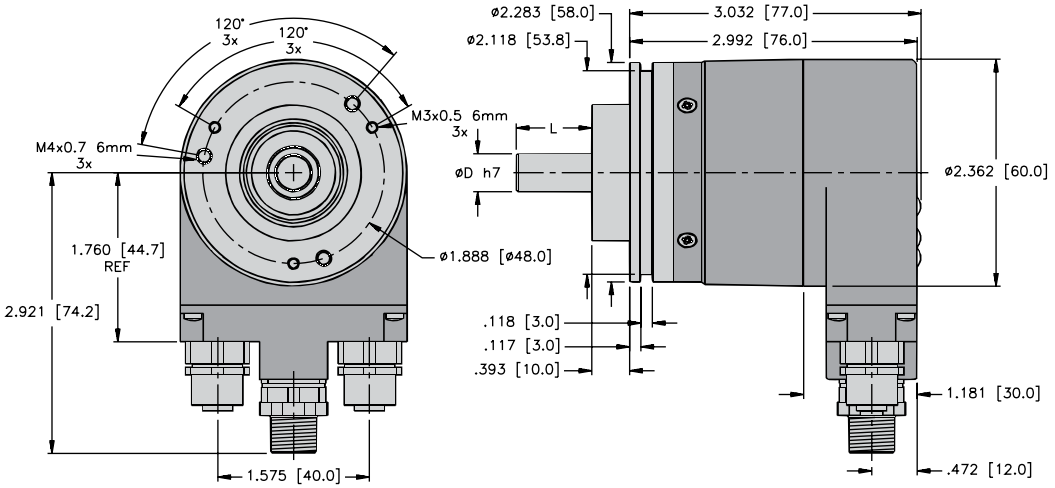

RM-29 Flange R
Connection R3M12

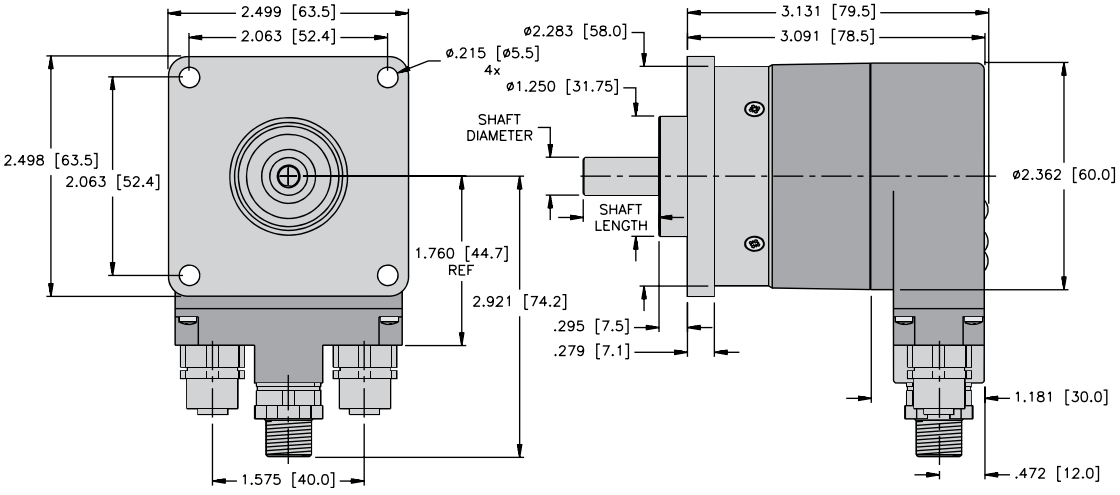

We reserve the right to make technical alterations without prior notice.

Absolute, Multiturn Type RM-29 (Shaft) / RM-36 (Blind Hollow Shaft) PROFINET IO

Dimensions: RM-36 Blind Hollow Shaft Version

RM-36 Flange T
Connection R3M12

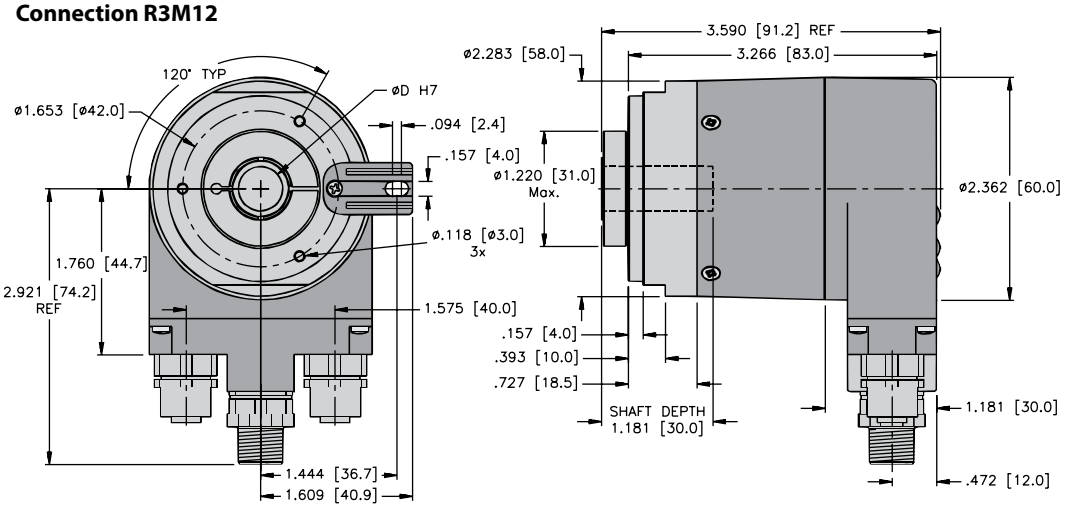

RM-36 Flange E
Connection R3M12

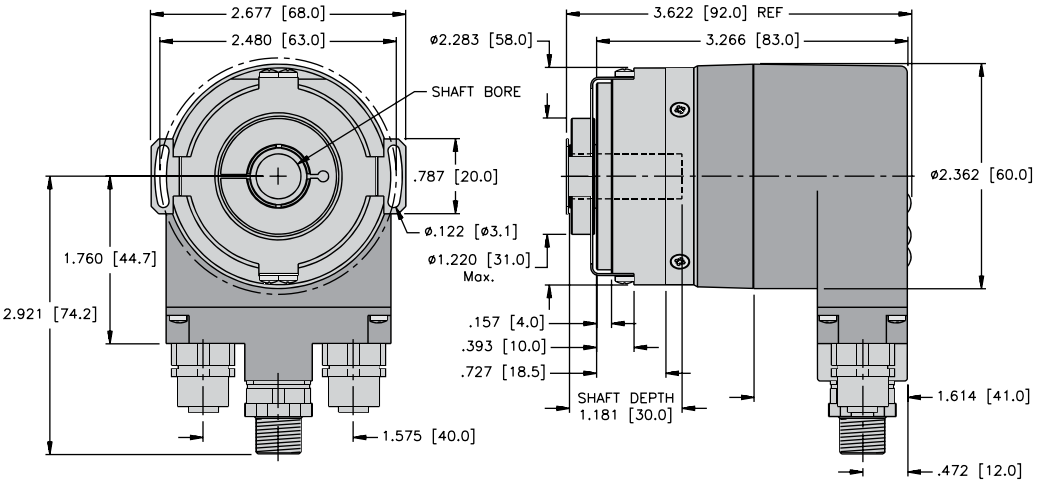

RM-36 Flange E1
Connection R3M12

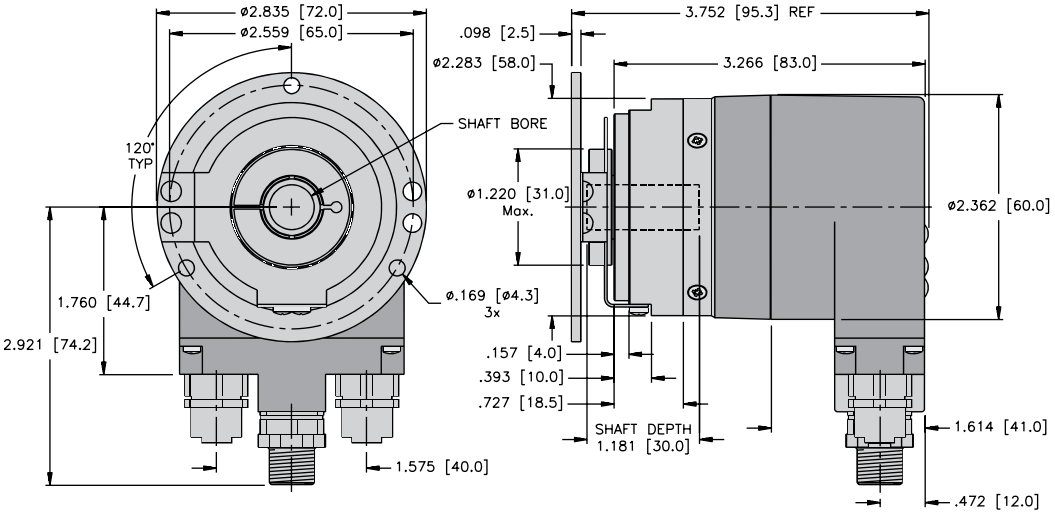

We reserve the right to make technical alterations without prior notice.

Turck Inc. | 3000 Campus Drive, Minneapolis, MN 55441 | T +1 800 544 7769 | F +1 763 553 0708 | www.turck.com

Absolute, Multiturn Type RM-103 (Shaft) / RM-104 (Hollow Shaft) SSI/BiSS

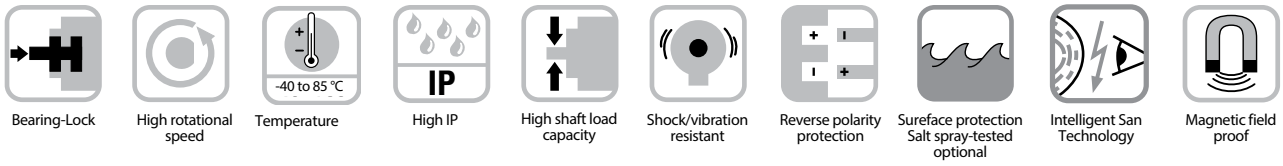

Bearing-Lock | High rotational speed | Temperature | High IP | High shaft load capacity | Shock/vibration resistant | Reverse polarity protection | Sureface protection Salt spray-tested optional | Intelligent San Technology | Magnetic field proof

Reliable
- Sturdy bearing construction in Bearing-Lock design for resistance against vibration and installation errors.
- Ideal for use outdoors thanks to IP67 protection and wide temperature range from -40 to +85 °C.



Absolute

Insensitive
- Turck OptoASIC technology with all singleturn and multiturn functions on one single OptoASIC - offering the highest reliability, a high resolution up to 41 bits and 100 % magnetic field insensitivity.

Versatile
- Available with SSI or BiSS interface and combined with SinCos incremental signals.
- The right fixing solution or type of connection available for every application.
- SET button and LED for simple start-up.
- High resolution feedback in real-time via incremental outputs SinCos and RS422.
- Short control cycles, clock frequency with SSI up to 2 MHz / with BiSS up to 10 MHz.

Mechanical Characteristics:

Max. speed shaft version: IP65 up to 158 °F | 70 °C : IP65 up to T max: IP67 up to 158 °F | 70 °C: IP67 up to T max:	 12000 RPM, continuous 10000 RPM 8000 RPM, continuous 5000 RPM 11000 RPM, continuous 9000 RPM 8000 RPM, continuous 5000 RPM
Max. speed hollow shaft version: IP65 up to 158 °F | 70 °C: IP65 up to T max: IP67 up to 158 °F | 70 °C: IP67 up to T max:	 9000 RPM, continuous 6000 RPM 6000 RPM, continuous 3000 RPM 8000 RPM, continuous 4000 RPM 4000 RPM, continuous 2000 RPM
Starting torque (68 °F | 20 °C): IP65: IP67:	 < 1.4 oz - in (0.01 Nm) < 7 oz - in (0.05 Nm)
Shaft load capacity: Radial: Axial:	 18 lbs (80 N) 9 lbs (40 N)
Mass moment of inertia: Shaft version: Hollow shaft version:	 0.16 oz - in^2 (3.0 × 10^{-6} kgm^2) 0.328 oz - in^2 (6.0 × 10^{-6} kgm^2)
Weight:	approx. 1.0 lbs (0.45 kg)
Protection acc. to EN 60529: Housing: Shaft:	 IP67 IP65, opt. IP67
Working temperature range:	–40 to +185 °F (–40+85 °C)[1)]
Materials: Shaft: Flange: Housing: Cable:	 stainless steel aluminium zinc die-cast PVC
Shock resistance acc. to EN 60068-2-27:	250 g (2,500 m/s²), 6 ms
Vibration resistance acc. to EN 60068-2-6:	10 g (100 m/s²), 55 - 2,000 Hz

We reserve the right to make technical alterations without prior notice.

Absolute, Multiturn Type RM-103 (Shaft) / RM-104 (Hollow Shaft) SSI/BiSS

General Electrical Characteristics:

Power supply:	5 VDC (+5%) or 10 - 30 VDC
Current consumption (no load): 5 VDC 10…30 VDC	 max. 60 mA max. 30 mA
Reverse polarity protection at power supply (+V):	yes (at 10 - 30 VDC)
Short-circuit protected outputs:	yes[1)]
UL approval:	file E356899
CE compliant acc. to:	EMC guideline 2014/30/EU RoHS guideline 2011/65/EU

Interface Characteristics SSI:

Output driver:	RS485 transceiver type
Permissible load / channel:	max +/– 30 mA
Signal high:	typ 3.8 V
Signal level low with I_{Load} = 20 mA:	typ 1.3 V
Resolution singleturn:	10 - 17 bit
Number of revolutions (multiturn):	max 24 bit
Code:	binary or gray
SSI clock rate:	50 kHz - 2 MHz
Data refresh rate: ST resolution ≤ 14 bit: ST resolution ≥ 15 bit:	 ≤ 1 µs 4 µs
Monoflop time:	≤ 15µs

Note: If the clock starts cycling within the monoflop time, a second data transfer starts with the same data. If the clock starts cycling after the monoflop time, the data transfer starts with the new values. The update rate is dependent on the clock speed, data length and monoflop-time.

BiSS Interface:

Resolution singleturn:	10 - 17 bit
Number of revolutions (multiturn):	max 24 bit
Code:	binary
BiSS clock rate:	50 kHz - 10MHz
Max. update rate:	< 10µs, depends on the clock rate and the data length
Data refresh rate:	≤ 1µs

Note:
- bidirectional, factory programmable parameters are resolution, code, direction, alarms and warnings
- CRC data verification

[1)] Short circuit to 0 V or to output; if power supply correctly applied

Status Output And LED:

Output driver:	open collector, internal pull up resistor 22 k 0 hm
Permissible load:	max 20 mA
Signal level:	HIGH: +V / LOW: <1V
Active:	LOW

The optional LED (red) and the status output serve to display various alarm or error messages. In normal operation the LED is OFF and the status output is HIGH (open collector with int. pull up 22 kOhm).

An active status output (LOW) displays:
- sensor error, singleturn or multiturn (soiling, glass breakage etc.)
- LED fault (failure or aging)
- over- or under-temperature

In the SSI mode, the fault indication can only be reset by switching off the power-supply to the device.

Option Incremental Outputs (A/B), 2048 ppr:

	SinCos	RS422 TTL-compatible
Max frequency –3dB:	400 kHz	400 kHz
Signal Level:	1 Vpp (±20%)	HIGH: min 2.5 V LOW: max 0.5 V
Short circut protected	yes[1)]	yes[1)]

SET Input:

Input characteristics:	active HIGH
Input type:	comparator
Signal level high:	min. 60% of +V (supply voltage), max: +V
Signal level low:	max. 30% of +V (supply voltage)
Input current:	< 0.5 mA
Min. pulse duration (SET):	10 ms
Input delay:	1 ms
New position data readable after:	1 ms
Internal processing time:	200 ms

The encoder can be set to zero at any position by means of a HIGH signal on the SET input. Other preset values can be factory-programmed. The SET in put has a signal processing time of approx. 1 ms, after which the new position data can be read via SSI or BiSS. Once the SET function has been triggered, the encoder requires an internal processing time of typ. 200 ms; during this time the power supply must not be switched off.

The SET function should be carried out while the encoder is at rest.

If this input is not used, it should be connected to 0 V (Encoder ground GND) in order to avoid interferences.

We reserve the right to make technical alterations without prior notice.

Turck Inc. | 3000 Campus Drive, Minneapolis, MN 55441 | T +1 800 544 7769 | F +1 763 553 0708 | www.turck.com

Absolute, Multiturn Type RM-103 (Shaft) / RM-104 (Hollow Shaft) SSI/BiSS

Standard Wiring:
Output Circuit *C and *F (2 Control Inputs, 1 Status Output) (Connection C*1M or 12M23*)

Connection Type:	Common (0 V)	+V	+Clock	-Clock	+Data	-Data	ST	DIR	Status	NC	NC	NC	PE
M23 Multifast:	1	2	3	4	5	6	7	8	9	10	11	12	PH
Cable:	WH	BN	GN	YE	GY	PK	BU	RD	BK	-	-	-	Shield

Output Circuit *H (2 Control Inputs, 1 Status Output, Voltage Monitor Outputs) (Connection C*1M or 12M23*)

Connection Type:	Common (0 V)	+V	+Clock	-Clock	+Data	-Data	ST	DIR	Status	NC	0 V Sens	+V Sens	PE
M23 Multifast:	1	2	3	4	5	6	7	8	9	10	11	12	PH
Cable:	WH	BN	GN	YE	GY	PK	BU	RD	BK	-	GY/PK	RD/BU	Shield

Output Circuit *E, *G, *K or *L (2 Control Inputs, Incremental Track or Sine/Cosine) (Connection C*1M or 12M23*)

Connection Type:	Common (0 V)	+V	+Clock	-Clock	+Data	-Data	ST	DIR	Sin A	Sin $\bar{A}$	Cos $\bar{B}$	Cos	PE
M23 Multifast:	1	2	3	4	5	6	7	8	9	10	11	12	PH
Cable:	WH	BN	GN	YE	GY	PK	BU	RD	BK	VT	GY/PK	RD/BU	Shield

Output Circuit *J (Sine/Cosine Monitor or Voltage Outputs) (Connection C*1M or 12M23*)

Connection Type:	Common (0 V)	+V	+Clock	-Clock	+Data	-Data	Sin A	Sin $\bar{A}$	Cos B	Cos $\bar{B}$	0 V Sens	+V Sens	PE
M23 Multifast:	1	2	3	4	5	6	7	8	9	10	11	12	PH
Cable:	WH	BN	GN	YE	GY	PK	BU	RD	BK	VT	GY/PK	RD/BU	Shield

Output Circuit *C and *F (2 Control Inputs) (Connection H1*81)

Connection Type:	Common (0 V)	+V	+Clock	-Clock	+Data	-Data	ST	DIR	PE
M12 Eurofast:	1	2	3	4	5	6	7	8	PH

Wiring Diagrams:

Male Encoder View	
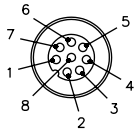	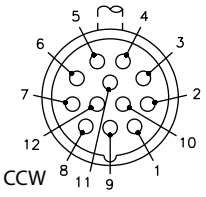
Mating Cordset: **E-RKC 8T-264-***	Mating Cordset: **E-CKM 12-1687-*/A**

* Length in meters.

We reserve the right to make technical alterations without prior notice.

Absolute, Multiturn Type RM-103 (Shaft) / RM-104 (Hollow Shaft) SSI/BiSS

Part Number Key: RM-103 Shaft Version

A	B	C		D	E1	E2		F		G
RM-103S	6	C	-	5F	9S	12M	-	H1181	/	N16

A	Type
RM-103S	Ø 58 mm, Shaft w/ Flat, IP67 Shaft Seal
RM-103T	Ø 58 mm, Shaft w/ Flat, IP65 Shaft Seal

B	Shaft (Ø x L)
6	Ø 6 mm x 10 mm
10	Ø 10 mm x 20 mm
A0	Ø 1/4" x 7/8"
A1	Ø 3/8" x 7/8"

C	Flange
C	Ø 58 mm Clamping Flange
S	Ø 58 mm Servo Flange

D	Voltage Supply and Output Type			
	SSI (BINARY)	SSI (GRAY)	BiSS	Features
5 V	5F	3F	DF	—
	5E	3E	DE	2048 PPR SinCos
	5H	3H	DH	Voltage Monitoring
	5J	3J	DJ	2048 PPR SinCos Plus Voltage Monitoring
	5K	3K	DK	2048 PPR Incr., RS422 (TTL-compatible)
10 - 30 V	5C	3C	DC	—
	5G	3G	DG	2048 PPR SinCos
	5L	3L	DL	2048 PPR Incr., RS422 (TTL - compatible)

E1	Resolution (singleturn)
9S	9 bit
10S	10 bit
12S	12 bit
13S	13 bit
14S	14 bit
17S	17 bit

E2	Resolution (multiturn)
12M	12 bit
16M	16 bit
24M	24 bit

F	Type of Connection
H1181	Radial 8-pin M12 Eurofast Connector*
H1481	Axial 8-pin M12 Eurofast Connector*
12M23	Radial 12-pin M23 Multifast Connector
12M23A	Axial 12-pin M23 Multifast Connector
C1M	Radial Cable (1m PVC)
CA1M	Axial Cable (1m PVC)

* = only available with output type *C and *F

G	Options
(BLANK)	SET button and Status LED (standard)
N16	No Option
N43	Status LED

We reserve the right to make technical alterations without prior notice.

Turck Inc. | 3000 Campus Drive, Minneapolis, MN 55441 | T +1 800 544 7769 | F +1 763 553 0708 | www.turck.com

Absolute, Multiturn Type RM-103 (Shaft) / RM-104 (Hollow Shaft) SSI/BiSS

Part Number Key: RM-104 Hollow Shaft Version

A	B	C		D	E1	E2		F		G
RM-104H	10	T	-	5F	9S	12M	-	H1181	/	N16

A	Type
RM-104H	Ø 58 mm, Hollow Shaft, IP67 Shaft Seal
RM-104I	Ø 58 mm, Hollow Shaft, IP65 Shaft Seal

B	Bore
10	Ø 10 mm
12	Ø 12 mm
14	Ø 14 mm
15	Ø 15 mm
A1	Ø 3/8"
A3	Ø 1/2"

C	Flange
T	Ø 50 mm Flange w/ Torque Stop
E	Ø 63 mm Flange w/ Slotted Flex Mount
E1	Ø 65 mm Flange w/ Flex Mount

D	Voltage Supply and Output Type			
	SSI (BINARY)	SSI (GRAY)	BiSS	Features
5 V	5F	3F	DF	—
	5E	3E	DE	2048 PPR SinCos
	5H	3H	DH	Voltage Monitoring
	5J	3J	DJ	2048 PPR SinCos Plus Voltage Monitoring
	5K	3K	DK	2048 PPR Incr., RS422 (TTL-compatible)
10 - 30 V	5C	3C	DC	—
	5G	3G	DG	2048 PPR SinCos
	5L	3L	DL	2048 PPR Incr., RS422 (TTL - compatible)

E1	Resolution (singleturn)
9S	9 bit
10S	10 bit
12S	12 bit
13S	13 bit
14S	14 bit
17S	17 bit

E2	Resolution (multiturn)
12M	12 bit
16M	16 bit
24M	24 bit

F	Type of Connection
H1181	Radial 8-pin M12 Eurofast Connector*
12M23	Radial 12-pin M23 Multifast Connector
C1M	Radial Cable (1 m PVC)
CT1M	Tangential Cable (1 m PVC)

* = only available with output type *C and *F

G	Options
(BLANK)	SET button and Status LED (standard)
N16	No Option
N43	Status LED

We reserve the right to make technical alterations without prior notice.

Absolute, Multiturn Type RM-103 (Shaft) / RM-104 (Hollow Shaft) SSI/BiSS

Dimensions: RM-103 Shaft Version

RM-103 Flange C
Connection 12M23 & 12M23A

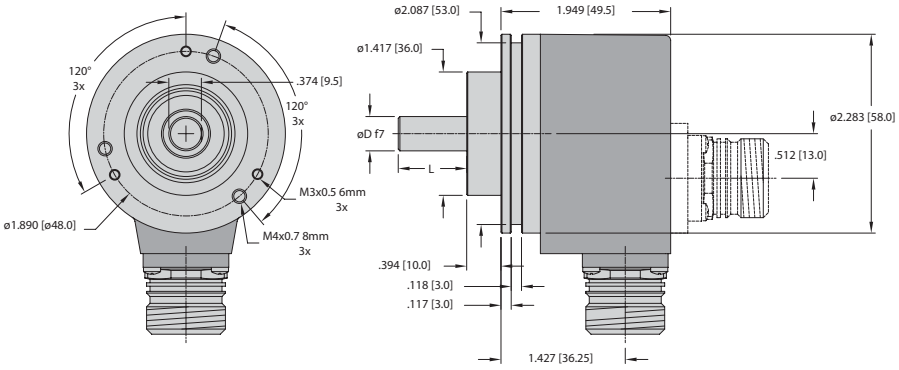

RM-103 Flange S
Connection H1181 & H1481

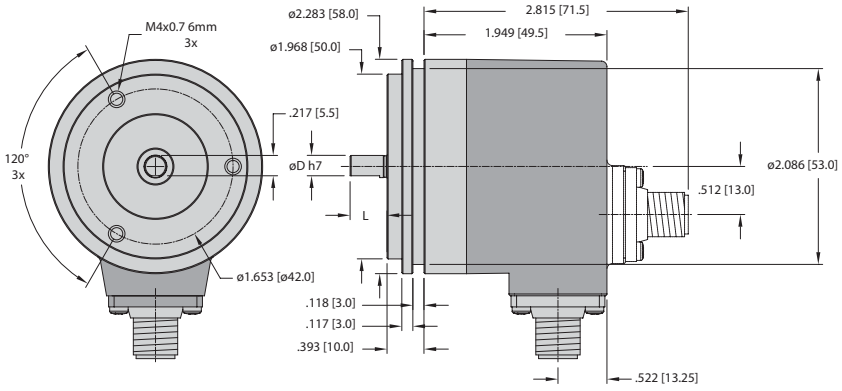

Mounting Advice:
The flanges and shafts of the encoder and drive should not be rigidly coupled together at the same time. We recommend the use of suitable couplings (see page G1, Accessories).

We reserve the right to make technical alterations without prior notice.

Absolute, Multiturn Type RM-103 (Shaft) / RM-104 (Hollow Shaft) SSI/BiSS

Dimensions: RM-104 Hollow Shaft Version

RM-104 Flange T
Connection H1181

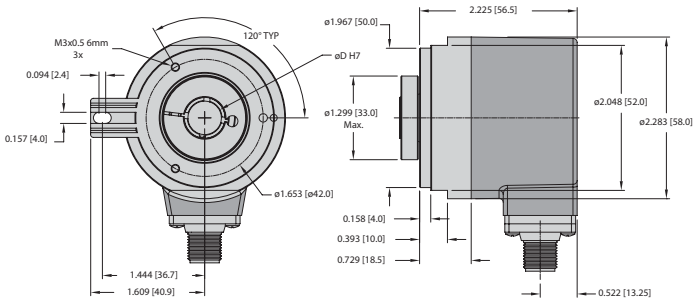

RM-104 Flange T
Connection CT1M

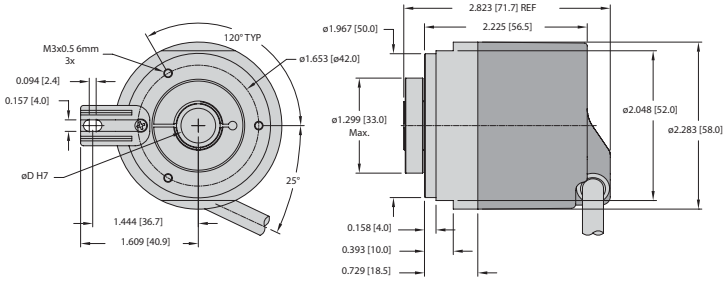

Dimensions: RM-104 Hollow Shaft Version

RM-104 Flange E
Connection 12M23

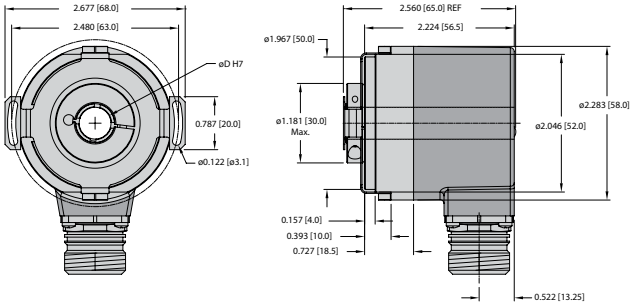

RM-104 Flange E1
Connection C1M

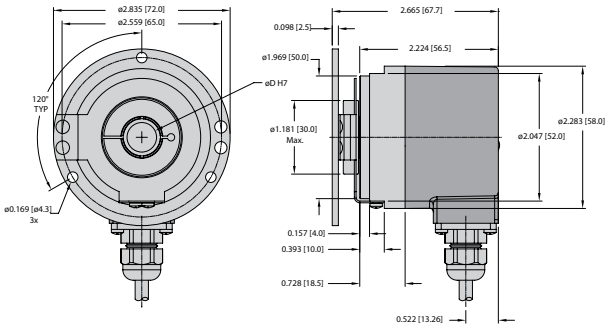

Mounting Advice:
The flanges and shafts of the encoder and drive should not be rigidly coupled together at the same time. We recommend the use of suitable couplings (see page G1, Accessories).

We reserve the right to make technical alterations without prior notice.

Absolute, Multiturn Type RM-105 (Shaft) /RM-106 (Hollow Shaft) CANopen

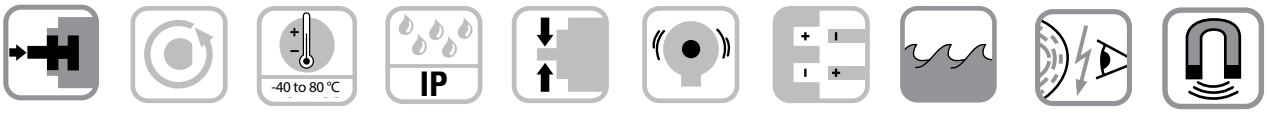

Bearing-Lock | High rotational speed | Temperature range | High IP | High shaft load capacity | Shock/vibration resistant | Reverse polarity protection | Surface protection salt spray-tested optional | Intelligent Scan Technology | Magnetic field proof

Reliable
- Sturdy bearing construction in Bearing-Lock design for resistance against vibration and installation errors.
- Ideal for use outdoors thanks to IP67 protection and wide temperature range from -40 up to +80 °C.



Absolute

CANopen

Insensitive
- Turck OptoASIC technology with all singleturn and multiturn functions on one single OptoASIC - offering the highest reliability, a high resolution up to 32 bits and 100% magnetic field insensitivity.

Up-To-The-Minute Fieldbus Performance
- CANopen with current encoder profile.
- LSS services for configuration of the node address and baud rate.
- Variable PDO mapping in the memory.
- Universal scaling function.
- 32 bits total resolution (16 bit MT + 16 bit ST).

Mechanical Characteristics:

Max. speed shaft version: IP65 up to 70 °C: IP65 up to T max: IP67 up to 70 °C: IP67 up to T max:	 12000 RPM, continuous 10000 RPM 8000 RPM, continuous 5000 RPM 11000 RPM, continuous 9000 RPM 8000 RPM, continuous 5000 RPM
Max. speed hollow shaft version: IP65 up to 70 °C: IP65 up to T max: IP67 up to 70 °C: IP67 up to T max:	 9000 RPM, continuous 6000 RPM 6000 RPM, continuous 3000 RPM 8000 RPM, continuous 4000 RPM 4000 RPM, continuous 2000 RPM
Starting torque (68 °F | 20 °C): IP65: IP67:	 < 1.4 oz - in (0.01 Nm) < 7.0 oz - in (0.05 Nm)
Shaft load capacity: Radial: Axial:	 18 lbs (80 N) 9 lbs (40 N)
Mass moment of inertia: Shaft version: Hollow shaft version:	 0.16 oz - in^2 (3.0 × 10^{-6} kgm^2) 0.328 oz - in^2 (6.0 × 10^{-6} kgm^2)
Weight:	approx. 1.0 lbs (0.45 kg)
Protection acc. to EN 60529: Housing: Shaft:	 IP67 IP65, opt. IP67
Working temperature range:	–40 to +176 °F (–40 to +80 °C)[1)]
Materials: Shaft: Flange: Housing: Cable:	 stainless steel aluminium zinc die-cast PVC
Shock resistance acc. to EN 60068-2-27:	250 g (2,500 m/s^2), 6 ms
Vibration resistance acc. to EN 60068-2-6:	10 g (100 m/s^2), 55 - 2,000 Hz

We reserve the right to make technical alterations without prior notice.

Turck Inc. | 3000 Campus Drive, Minneapolis, MN 55441 | T +1 800 544 7769 | F +1 763 553 0708 | www.turck.com

Absolute, Multiturn Type RM-105 (Shaft) /RM-106 (Hollow Shaft) CANopen

General Electrical Characteristics:

Power supply:	10 - 30 VDC
Current consumption (no load):	max. 80 mA
Reverse polarity protection at power supply (+V):	yes
UL approval:	file E356899
CE compliant acc. to:	EMC guideline 2014/30/EU RoHS guideline 2011/65/EU

Diagnostic LED (two-color, red/green):

LED ON or blinking:	
Red:	error display
Green:	status display
Combo red/ green:	error code

Interface Characteristics CANopen:

Resolution singleturn:	1 - 65536 (16 bit), scalable default: 8192 (13 bit)
Number of revolutions (multiturn):	max. 65536 (16 bit) scalable only via the total resolution
Total resolution:	1 - 4,292,967,296 (32 bit) default: 25 bit
Code:	binary
Interface:	CAN high-speed acc. to ISO 11898, Basic- and Full-CAN, CAN specification 2.0 B
Protocol:	CANopen profile DS406 V3.2 with manufacturer-specific add-ons, LSS-Service DS305 V2.0
Baud rate:	10 - 1000 kbit/s software configurable
Node address:	1 - 127 software configurable
Termination switchable:	software configurable
LSS protocol:	CIA LSS protocol DS305, global command support for node address and baud rate, selective commands via attributes of the identity object

We reserve the right to make technical alterations without prior notice.

General Information About CANopen

The CANopen encoders support the latest CANopen communication profile according to DS301 V4.2. In addition, device specific profiles such as encoder profile DS406 V3.2 and DS305 (LSS) are available.

The following operating modes may be selected: Polled Mode, Cyclic Mode, Sync Mode and a High Resolution Sync Protocol. Moreover, scale factors, preset values, limit switch values and many other additional parameters can be programmed via the CAN bus.

When switching the device on, all parameters, which have been saved on an EEPROM to protect them against power failure, are loaded again.

The following output values may be combined in a freely variable way as PDO (PDO mapping): **position, speed, temperature** as well as the **status of the working area.**

The encoders are available with a connector or a cable connection.

The device address and baud rate can be set/ modified by means of the software.

The two-color LED located on the back indicates the operating or fault status of the CAN bus, as well as the status of the internal diagnostics.

Universal Scaling Function

At the end of the physical resolution of an encoder, when scaling is active, an error appears if the division of the physical limit (GP_U) by the programmed total resolution (TMR) does not produce an integer.

The universal scaling function remedies this problem.

CANopen Communication Profile DS301 V4.2

Among others, the following functionality is integrated. (Class C2 functionality):

- NMT Slave
- Identity Object
- Error Behavior Object
- Variable PDO Mapping self-start programmable (Power on to operational), 4 Sending PDO's.
- Node address, baud rate and CANbus / programmable termination.
- Producer / consumer heartbeat.

CANopen encoder profile DS406 V3.2

The following parameters can be programmed:

- Event mode
- 2 working areas with 2 upper and lower limits and the corresponding output states.
- Variable PDO mapping for position, speed, work area status, error message, raw data.
- Extended failure management for position sensing.
- User interface with visual display of bus and failure status.
- Customer-specific memory 16 Byte.
- Customer-specific protocol.
- Universal Scaling Function (USF).
- "Watchdog controlled" device.
- Extended diagnostic modes**.**

LSS Layer Setting Services DS305 V2.0

- Global support of node-ID and baud rate.
- Selective protocol via identity object (1018h).

Standard Wiring:

Connection Type:	+V	Common (0 V)	CAN GND	CAN High	CAN Low
Cable:	BN	WH	GY	GN	YE
M12 Eurofast:	2	3	1	4	5

Wiring Diagrams:

Male Encoder View	Female Encoder View
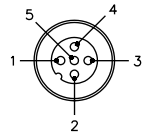	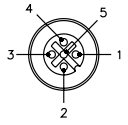
Bus In	Bus Out
Mating Cordset[1]: RKC 572-*M/S3117	Mating Cordset: [1] RSC 572-*M/S3118

* Length in meters.
[1] See Connectivity section H for corresponding cable color code.

Absolute, Multiturn Type RM-105 (Shaft) /RM-106 (Hollow Shaft) CANopen

Part Number Key: RM-105 Shaft Version

A	B	C		D		E		F
RM-105S	6	C	-	9D32B	-	B2M12	/	N46

A	Type
RM-105S	Ø 58 mm, Shaft, IP67 Shaft Seal
RM-105T	Ø 58 mm, Shaft, IP65 Shaft Seal

B	Shaft (Ø × L)
6	Ø 6 mm × 10 mm
10	Ø 10 mm × 20 mm
A0	Ø 1/4" × 7/8"
A1	Ø 3/8" × 7/8"

C	Flange
C	Ø 58 mm Clamping Flange
S	Ø 58 mm Servo Flange

D	Voltage Supply and Output Type
9D32B	10 - 30 VDC, CANopen DS301 V4.02

E	Type of Connection
B1M12	Radial 1× M12 Eurofast Connector
B2M12	Radial 2 × M12 Eurofast Connector
C	Radial Cable (1m PVC)

F	Options
(BLANK)	No Options
N46	SET Button

Part Number Key: RM-106 Hollow Shaft Version

A	B	C		D		E		F
RM-106B	10	T	-	9D32B	-	B1M12	/	N46

A	Type
RM-106B	Ø 58 mm, Hollow Shaft, IP67 Shaft Seal
RM-106C	Ø 58 mm, Hollow Shaft, IP65 Shaft Seal
RM-106H	Ø 58 mm, Blind Hollow Shaft, IP67 Shaft Seal[1]
RM-106I	Ø 58 mm, Blind Hollow Shaft, IP65 Shaft Seal[1]

[1] = only available with bore "12"

B	Bore
10	Ø 10 mm
12	Ø 12 mm (30 mm insertion depth on blind hollow)
14	Ø 14 mm
15	Ø 15 mm

C	Flange
T	Ø 58 mm Flange w/ Torque Stop
E	Ø 63 mm Flange w/ Slotted Flex Mount
E1	Ø 65 mm Flange w/ Flex Mount

D	Voltage Supply and Output Type
9D32B	10…30 VDC, CANopen DS 301 V4.02

E	Type of Connection
B1M12	Radial 1× M12 Eurofast Connector
B2M12	Radial 2 × M12 Eurofast Connectors[2]
CT	Tangential Cable (2m PVC)

[2] = only available with flange "H" or "I" and bore "12".

F	Options
(BLANK)	No Options
N46	SET Button

We reserve the right to make technical alterations without prior notice.

Absolute, Multiturn Type RM-105 (Shaft) /RM-106 (Hollow Shaft) CANopen

Dimensions: RM-105 Shaft Version

RM-105 Flange S
Connection B1M12

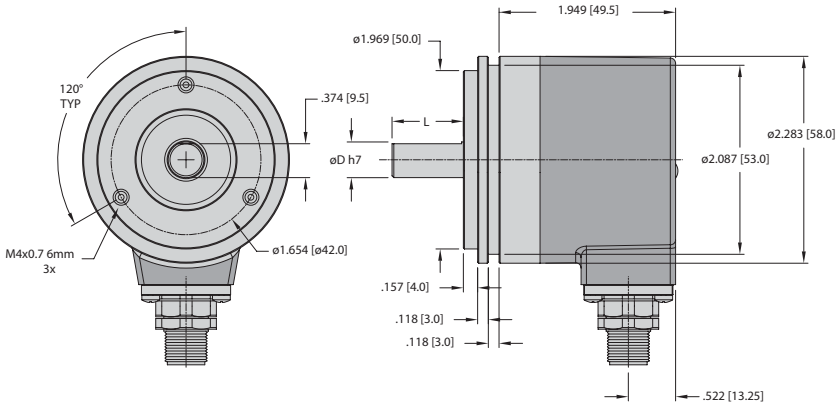

RM-105 Flange C
Connection C

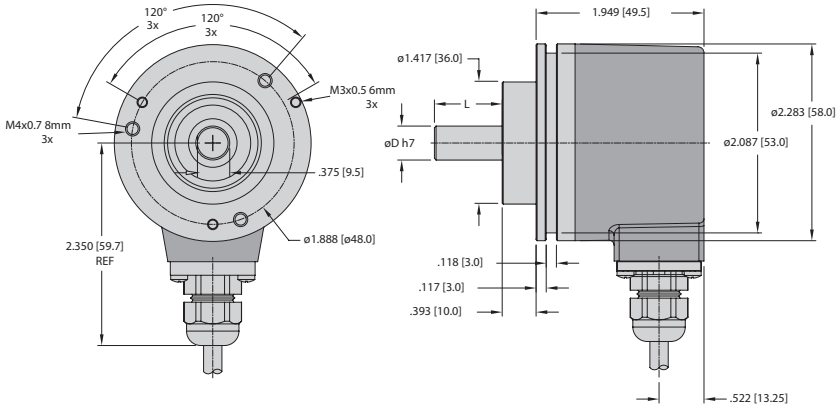

We reserve the right to make technical alterations without prior notice.

Absolute, Multiturn Type RM-105 (Shaft) / RM-106 (Hollow Shaft) CANopen

Dimensions: RM-106 Hollow Shaft Version

RM-106 Flange T
Connection B1M12

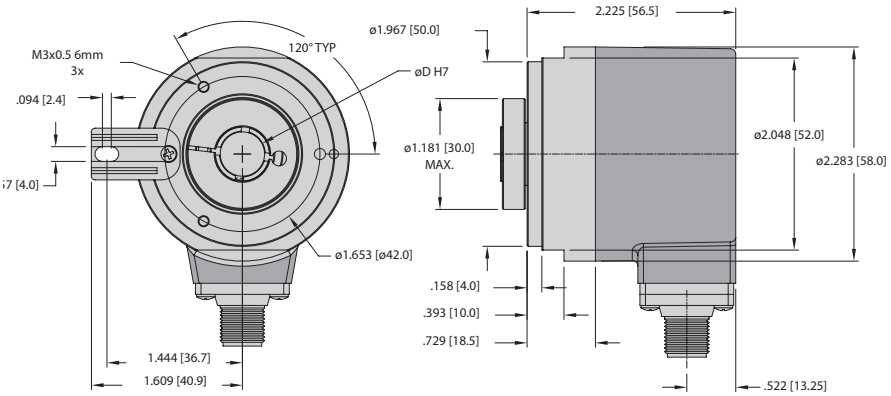

RM-106 Flange E
Connection CT

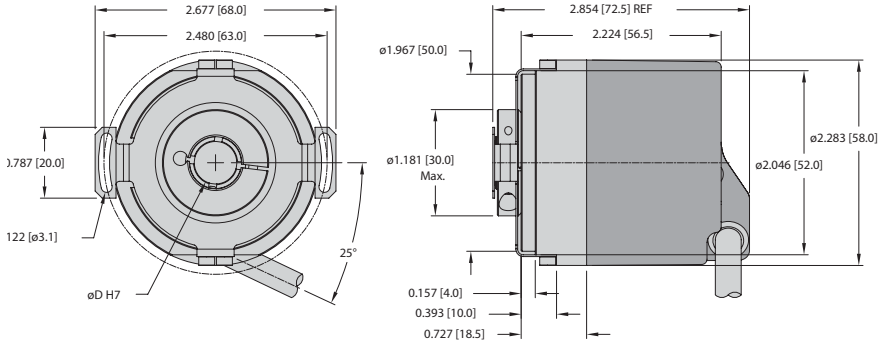

RM-106 Flange E1
Connection B2M12

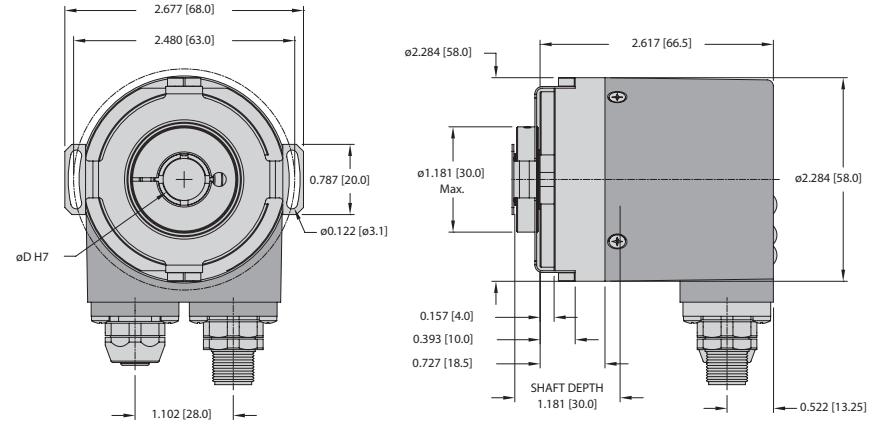

Mounting Advice:
The flanges and shafts of the encoder and drive should not be rigidly coupled together at the same time. We recommend the use of suitable couplings (see page G1, Accessories).

We reserve the right to make technical alterations without prior notice.

Absolute, Multiturn Type RM-105 (Shaft) / RM-106 (Blind Hollow Shaft) EtherNet/IP

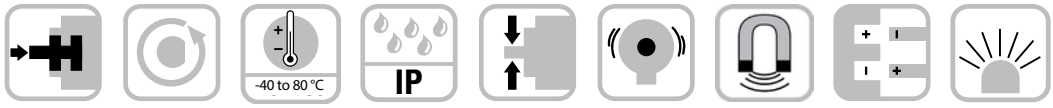

Bearing-Lock | High rotational speed | Temperature | High IP | High shaft load capacity | Shock/vibration resistant | Magnetic field proof | Reverse polarity protection | Optical sensor

Reliable

- Increased ability to withstand vibration and installation errors. Sturdy Bearing-Lock design structure eliminates machine downtime and repairs.
- Wide temperature range of -40 to +176 °F(-40 to +80 °C).
- Fewer components and connection points increase the operational reliability: Turck OptoASIC technology with highest integration density(Chip-on-board).



Absolute

EtherNet/IP

Fast

- 5x faster position value transfer that the usual market encoder – RPI time of 1 ms
- Fast and easy commissioning, configuration possible through cyclic services
- M12 connector ensures fast, simple, error-free connection

Versatile

- Thanks to the implementation of DLR (Device Level Ring) a single cable break does not lead to a "machine down" state.
- 32 bits total resolution, shafts up to 10 mm, blind hollow shafts up to 15 mm and certified EtherNet/IP functionality.
- The optical absolute multiturn EtherNet/IP encoders were designed for time sensitive applications. Their distinctive features help not only with the machine's performance as well as uptime, but also contribute to time and cost savings.

Mechanical Characteristics:

Max. speed shaft version (IP65) up to 158 °F (70 °C): Max. speed shaft version (IP65) up to Tmax: Max. speed blind hollow shaft version (IP65) up to 158 °F (70 °C): Max. speed blind hollow shaft version (IP65) up to Tmax:	8,000 RPM, continuous 6000 RPM 6,000 RPM, continuous 4000 RPM 6,000 RPM, continuous 4000 RPM 4,000 RPM, continuous 3,000 RPM
Starting torque at 68 °F (20 °C):	1.4 oz-in (< 0.01 Nm)
Moment of inertia:	Shaft version: 0.16 oz-in^2 (3.0 x 10^{-6} kgm^2) Hollow shaft version: 0.32 oz-in^2 (6.0 x 10^{-6} kgm^2)
Radial load capacity of shaft:	18 lbs (80 N)
Axial load capacity of shaft:	9 lbs (40 N)
Weight:	approx. 1.0 lbs (0.45 kg)
Protection acc. to EN 60 529:	IP65
Working temperature:	-40 to +176 °F (-40 to +80 °C)
Materials:	Shaft: stainless steel, Flange: aluminum, Housing: aluminum
Shock resistance acc. to EN 60068-2-27:	> 250 g (> 2,500 m/s^2), 6 ms
Vibration resistance acc. to EN 60068-2-26:	> 10 g (> 100 m/s^2), 55-2,000 Hz

General Information about EtherNetIP

EtherNet/IP conformance tested acc. to version CT-12 of Dec. 11, 2014
EtherNet/IP specification Vol 2, Ed 1.17
CIP specification Vol 1, Ed 3.16.

Applications

Industrial Ethernet is increasingly imposing itself as the new communication standard in automation technology. The goal is to create a vertical integration – that is to say: only one core computer, from the control level up to the industrial production plants – that will be able to control any devices.

The Turck EtherNet/IP encoders demonstrate their abilities in the following application examples: automotive production, logistics, metal-working, textile, printing and packaging machines.

We reserve the right to make technical alterations without prior notice.

Absolute, Multiturn Type RM-105 (Shaft) / RM-106 (Blind Hollow Shaft) EtherNet/IP

General Electrical Characteristics:

Supply voltage:	10-30 VDC
Current consumption (without output load):	Max. 250 mA
Reverse polarity protection at power supply (+V):	Yes
CE compliant acc. to:	EMC guideline 2014/30/EU RoHS guideline 2011/65/EU
UL approval:	file E356899

Device Characteristics:

Singleturn resolution Default value:	1-65536 (16 bit), (scalable: 1-65536) 65536 (16 bit)
Multiturn resolution:	Max. 65536 (16 bit) scalable only via the total resolution
Total resolution:	scalable from 1 to 4,294,967,296 (32 bit)
Code:	Binary
Interface:	EtherNet/IP

Rear side connection and display elements

1 LED: Link 1
2 LED: Mod.
3 LED: Net.
4 LED: Encoder
5 LED: Link 2
6 Power
7 Port 1
8 Port 2
9 Switch: x1
10 Switch: x100
11 Switch: x10

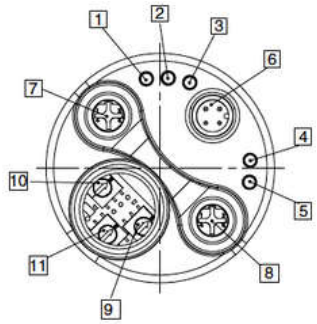

The following functionalities are integrated:

Adjustable parameters
- Preset
- Count direction
- Resolution
- Unity of speed
- IP address
- Number of revolutions
- Position
- Diagnosis
- Position limit
- Warning messages

Objects (CIP Objects)
- Identity Object
- Message Router
- Assembly Object
- Connection Manager
- Parameter Object
- Position Sensor Object
- Qos Object
- Port Object
- TCP / IP Interface Object
- EtherNet Link Object

EtherNet/IP features
- DLR (Device Level Ring) possible
- Qos (Quality of Service) possible
- ACD (Address Conflict Detection)
- Multicast and unicast capability

Universal Scaling Function (USF)

This Encoder has the Turck Universal Scaling Function (USF) always activated. There is no position error at the end of the total measuring range, when using a decimal divider for position scaling.

Without the USF function, you can only use a binary scaling divider. Otherwise, you get a position error at the end of the total measuring range (TMR).

Standard Wiring (Bus): (M12 Eurofast Connector, D-Coded)

Direction:	Port 1				Port 2			
Signal:	Transmit data+	Receive data+	Transmit data-	Receive data-	Transmit data+	Receive data+	Transmit data-	Receive data-
Abbrv:	TxD+	RxD+	TxD-	RxD-	TxD+	RxD+	TxD-	RxD-
M12 Eurofast:	1	2	3	4	1	2	3	4

Standard Wiring (Power Supply): M12 Eurofast Connector

Signal:	Power Supply	N/C	Common	N/C
Abbrv:	+V	-	0 V	-
M12 Eurofast:	1	2	3	4

Wiring Diagrams:

Bus	Power Supply
Female Encoder View	Male Encoder View
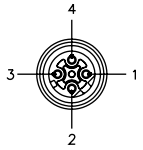	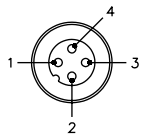
M12 Eurofast Pinout	M12 Eurofast Pinout
Mating Cordset: **RSSD 441-***	Mating Cordset: **RK 4.4T-***

We reserve the right to make technical alterations without prior notice.

Turck Inc. | 3000 Campus Drive, Minneapolis, MN 55441 | T +1 800 544 7769 | F +1 763 553 0708 | www.turck.com

Absolute, Multiturn Type RM-105 (Shaft) / RM-106 (Blind Hollow Shaft) EtherNet/IP

Part Number Key: RM-105 Shaft Version

A	B	C		D		E
RM-105T	6	C	-	9N32B	-	B3M12

A	Type
RM-105T	Ø 58 mm, Shaft, IP65 Shaft Seal

B	Shaft (Ø x L)
6	Ø 6 mm x 10 mm
10	Ø 10 mm x 20 mm
A0	Ø 1/4" x 7/8"
A1	Ø 3/8" x 7/8"

C	Flange
C	Ø 58 mm Clamping Flange
S	Ø 58 mm Servo Flange
R	2.5" Square Flange

D	Voltage Supply and Output Type
9N32B	10-30 VDC, EtherNet/IP w/DLR

E	Type of Connection
B3M12	Axial 3 x M12 Eurofast Connectors

Part Number Key: RM-106 Blind Hollow Shaft Version

A	B	C		D		E
RM-106C	10	T	-	9N32B	-	B3M12

A	Type
RM-106C	Ø 58 mm, Blind Hollow Shaft, IP65 Shaft Seal

B	Bore (30 mm Insertion Depth)
10	Ø 10 mm
12	Ø 12 mm
14	Ø 14 mm
15	Ø 15 mm
A1	Ø 3/8"
A3	Ø 1/2"

C	Flange
E	Ø 63 mm Flange w/ Slotted Flex Mount
E1	Ø 65 mm Flange w/ Flex Mount
T	Flange w/ Torque Stop

D	Voltage Supply and Output Type
9N32B	10-30 VDC, EtherNet/IP w/DLR

E	Type of Connection
B3M12	Axial 3 x M12 Eurofast Connectors

Accessories:

- See page H1, Connectivity, for cables and connectors
- See page G1, Accessories, for mounting attachments and couplings

We reserve the right to make technical alterations without prior notice.

Absolute, Multiturn Type RM-105 (Shaft) / RM-106 (Blind Hollow Shaft) EtherNet/IP

Dimensions: RM-105 Shaft Version

RM-105 Flange C
Connection B3M12

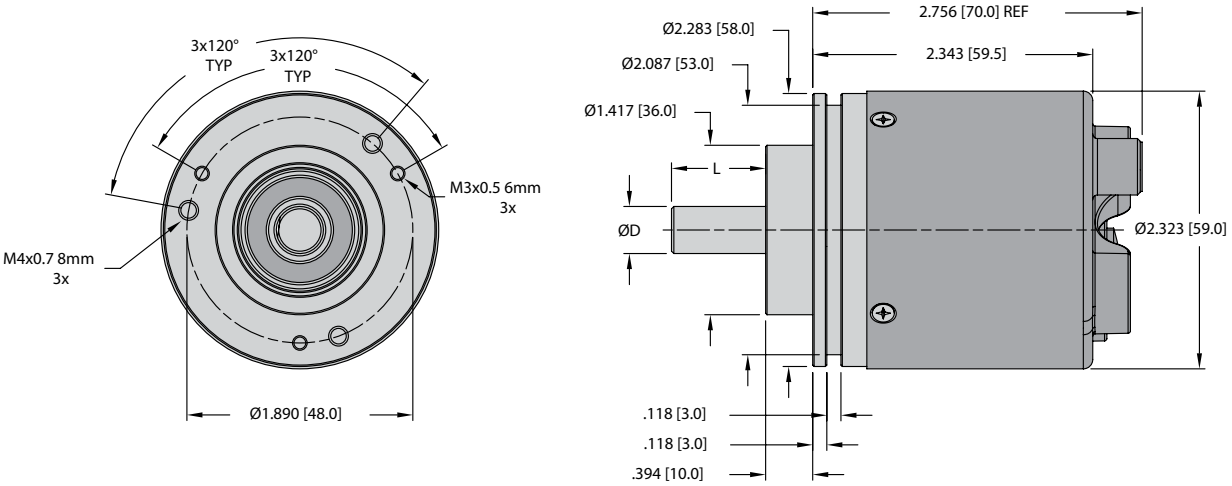

RM-105 Flange S
Connection B3M12

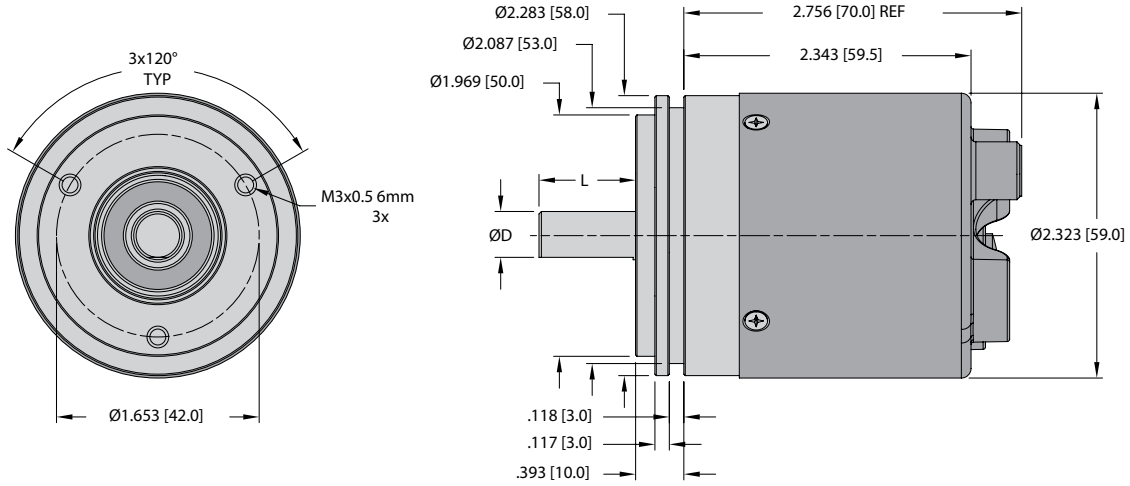

RM-105 Flange R
Connection B3M12

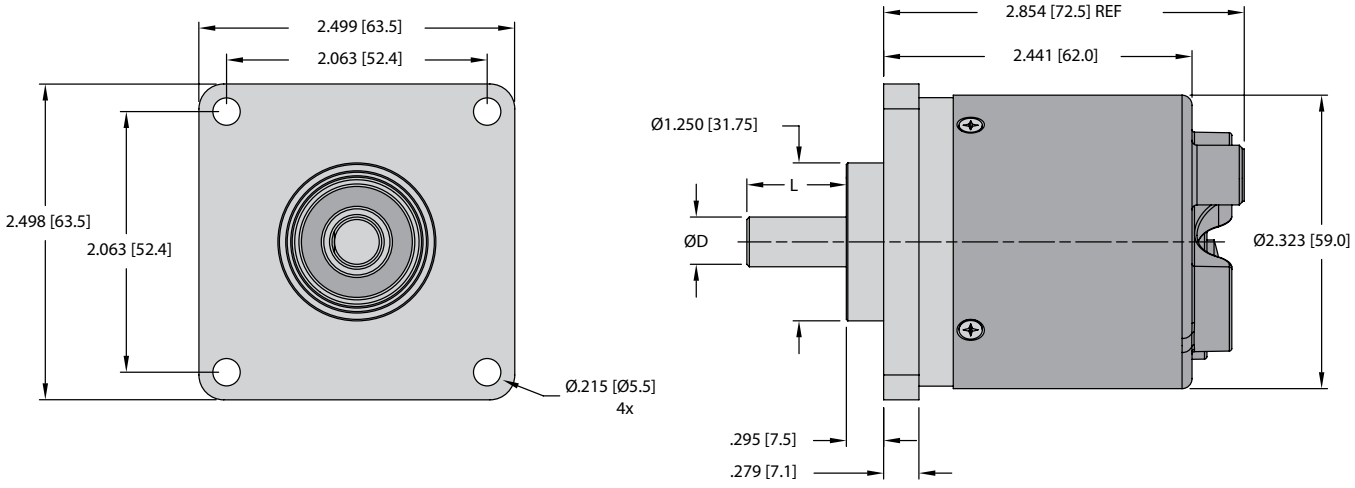

We reserve the right to make technical alterations without prior notice.

Absolute, Multiturn Type RM-105 (Shaft) / RM-106 (Blind Hollow Shaft) EtherNet/IP

Dimensions: RM-106 Blind Hollow Shaft Version

RM-106 Flange T
Connection B3M12

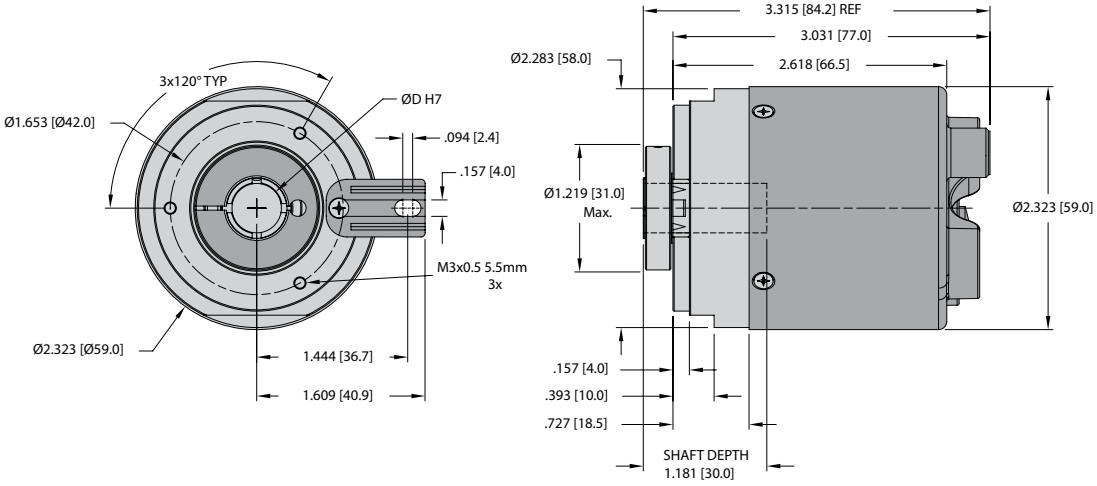

RM-106 Flange E
Connection B3M12

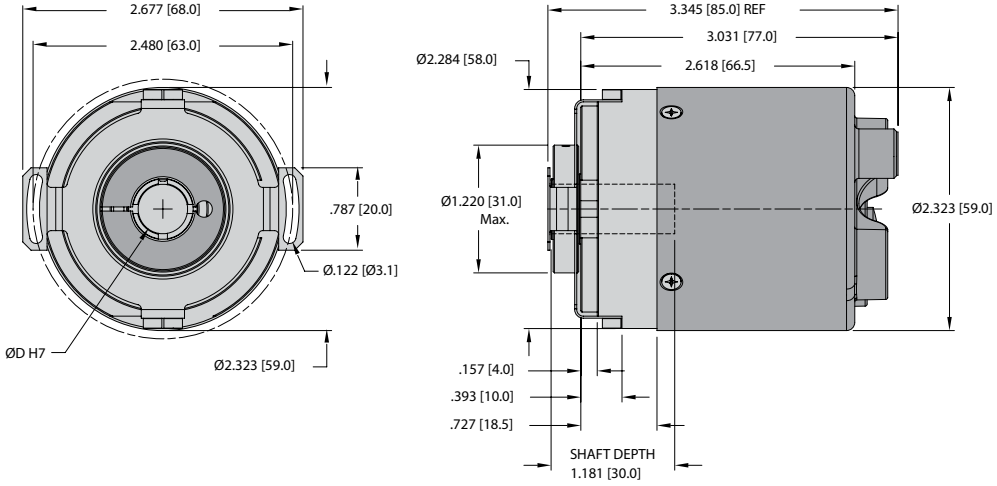

RM-106 Flange E1
Connection B3M12

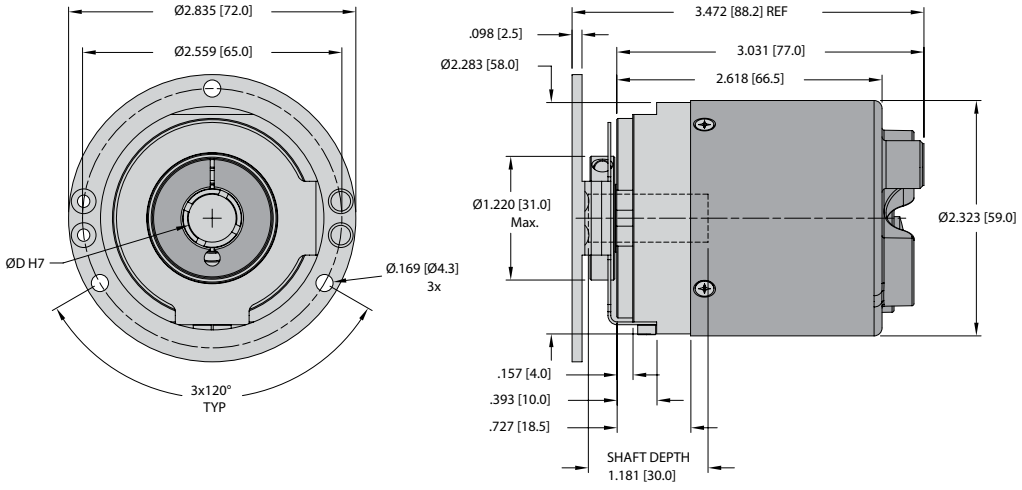

We reserve the right to make technical alterations without prior notice.

Absolute, Multiturn Type RM-105 (Shaft) / RM-106 (Hollow Shaft) — Modbus

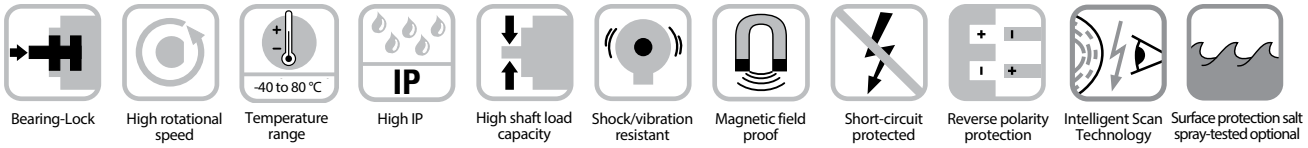

Bearing-Lock | High rotational speed | Temperature range | High IP | High shaft load capacity | Shock/vibration resistant | Magnetic field proof | Short-circuit protected | Reverse polarity protection | Intelligent Scan Technology | Surface protection salt spray-tested optional

Reliable

- Sturdy bearing construction in Bearing-Lock design for resistance against vibration and installation errors.
- Ideal for use outdoors thanks to IP67 protection and wide temperature range from -40 to +80 °C.



Absolute

Insensitive

- Turck OptoASIC technology with all singleturn and multiturn functions on one single OptoASIC - offering the highest reliability, a high resolution up to 32 bits and 100% magnetic field insensitivity.

Current Modbus Performance

- Modbus register for configuration of the node address and baud rate.
- Scaling function.
- 32 bits total resolution (16 bit MT + 16 bit ST).
- Preset function.
- Diagnostic functions.
- Limit switch function.

Mechanical Characteristics:

Max. speed shaft version:	
IP65 up to 70 °C:	12000 RPM, 10000 RPM (continuous)
IP65 up to T max:	8000 RPM, 5000 RPM (continuous)
IP67 up to 70 °C:	11000 RPM, 9000 RPM (continuous)
IP67 up to T max:	8000 RPM, 5000 RPM (continuous)
Max. speed hollow shaft version:	
IP65 up to 70 °C:	9000 RPM, 6000 RPM (continuous)
IP65 up to T max:	6000 RPM, 3000 RPM (continuous)
IP67 up to 70 °C:	8000 RPM, 4000 RPM (continuous)
IP67 up to T max:	4000 RPM, 2000 RPM (continuous)
Starting torque (68 °F | 20 °C):	
IP65:	< 1.4 oz - in (0.01 Nm)
IP67:	< 7.0 oz - in (0.05 Nm)
Mass moment of inertia:	
Shaft version:	0.16 oz - in^2 (3.0 × 10^{-6} kgm^2)
Hollow shaft version:	0.328 oz - in^2 (6.0 × 10^{-6} kgm^2)
Shaft load capacity:	
Radial:	18 lbs (80 N)
Axial:	9 lbs (40 N)
Weight:	approx. 1.0 lbs (0.45 kg)
Protection acc. to EN 60529:	
Housing:	IP67
Shaft:	IP65, opt. IP67
Working temperature range:	–40 to +176 °F (–40 to +80 °C)
Materials:	
Shaft:	stainless steel
Flange:	aluminium
Housing:	zinc die-cast
Shock resistance acc. to EN 60068-2-27:	250 g (2,500 m/s^2), 6 ms
Vibration resistance acc. to EN 60068-2-6:	10 g (100 m/s^2), 55 - 2,000 Hz

We reserve the right to make technical alterations without prior notice.

Turck Inc. | 3000 Campus Drive, Minneapolis, MN 55441 | T +1 800 544 7769 | F +1 763 553 0708 | www.turck.com

Absolute, Multiturn Type RM-105 (Shaft) / RM-106 (Hollow Shaft) — Modbus

General Electrical Characteristics:

Power supply:	10 - 30 VDC
Power consumptions (no load)	max. 80 mA
Reverse polarity protection at the power supply (+V):	yes
UL approval:	file E356899
CE compliant acc. to:	EMC guideline 2014/30/ RoHS guideline 2011/65/EU

Diagnostic LED (two-color, red/green):

LED ON or blinking:	
Red:	error display
Green:	status display
Combination red / green:	error code

Interface Characteristics Modbus:

Singleturn resolution:	1 - 65536 (16 bit), scalable default: 65536 (16 bit)
Number of revolutions (multiturn):	max. 65536 (16 bit) scalable only via the total resolution
Total resolution:	1 - 4,294,967,296 (32 bit), scalable
Code:	binary
Interface:	Modbus V1.02
Protocol:	Modbus RTU V1.1b3
Baud rate:	9600 - 115200 kbit/s software configurable
Node address	1 - 63 software configurable
Termination	software configurable

Read Holding Register:

Register:	Data Name:
40257	baud rate number date parity stopbits
40261	comm update
40262	node address
40263	node update
40264	preset value
40266	preset update
40267	count direct
40268	count update
40269	termination
40270	term update

Write Holding Register:

Register:	Data Name:
40275	lower limit
40276	upper limit
40277	compare activ
40278	MUR (MSB)
40279	MUR (LSB)
40280	TMR (MSB)
40281	TMR (LSB)
40282	scaling function
40283	delay prescaler

Modbus Communication Profile V 1.02

- Node address, baud rate and bus termination programmable.

Modbus Application Protocol V 1.1b3

The following parameters can be programmed:

- 2 working area with 2 upper and lower limits and the corresponding output states.
- Extended failure management for position sensing.
- User interface with visual display of bus and failure status.
- "Watchdog controlled" device.
- Extended diagnostic modes.

Wiring Diagram:

Male Encoder View

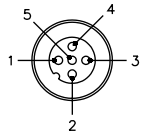

Mating Cordset[1]:
RKC 572-*M/S3117

* Length in meters.
[1] See Connectivity section H for corresponding cable color code.

Standard Wiring:

Connection Type:	GND (0V)	V+	D0	D1	Case Ground
Cable:	BK	RD	BU	WH	N/C
M12 Pin:	3	2	5	4	1

We reserve the right to make technical alterations without prior notice.

Absolute, Multiturn Type RM-105 (Shaft) / RM-106 (Hollow Shaft) — Modbus

Part Number Key: RM-105 Shaft Version

A	B	C		D		E
RM-105S	6	C	-	9P32B	-	B1M12

A	Type
RS-105S	Ø 58 mm, Shaft, IP67 Shaft Seal
RS-105T	Ø 58 mm, Shaft, IP65 Shaft Seal

B	Shaft (Ø x L)
6	Ø 6 mm x 10 mm
10	Ø 10 mm x 20 mm
A0	Ø 1/4" x 7/8"
A1	Ø 3/8" x 7/8''

C	Flange
C	Ø 58 mm Clamping Flange
S	Ø 58 mm Servo Flange

D	Supply Voltage and Output Type
9P32B	10 - 30 VDC, Modbus RTU V1.1b3

E	Type of Connection
B1M12	Radial 1 × M12 Eurofast Connector

Part Number Key: RM-106 Hollow Shaft Version

A	B	C		D		E
RM-106B	10	T	-	9P32B	-	B1M12

A	Type
RM-106B	Ø 58 mm, Hollow Shaft, IP67 Shaft Seal
RM-106C	Ø 58 mm, Hollow Shaft, IP65 Shaft Seal

B	Bore
10	Ø 10 mm
12	Ø 12 mm
14	Ø 14 mm
15	Ø 15 mm

C	Flange
T	Ø 58 mm Flange w/ Torque Stop
E	Ø 63 mm Flange w/ Slotted Flex Mount
E1	Ø 65 mm Flange w/ Flex Mount

D	Supply Voltage and Output Type
9P32B	10 - 30 VDC, Modbus RTU V1.1b3

E	Type of Connection
B1M12	Radial 1 × M12 Eurofast Connector

We reserve the right to make technical alterations without prior notice.

Turck Inc. | 3000 Campus Drive, Minneapolis, MN 55441 | T +1 800 544 7769 | F +1 763 553 0708 | www.turck.com

Absolute, Multiturn Type RM-105 (Shaft) / RM-106 (Hollow Shaft) — Modbus

Dimensions: RM-105 Shaft Version

RM-105 Flange S
Connection B1M12

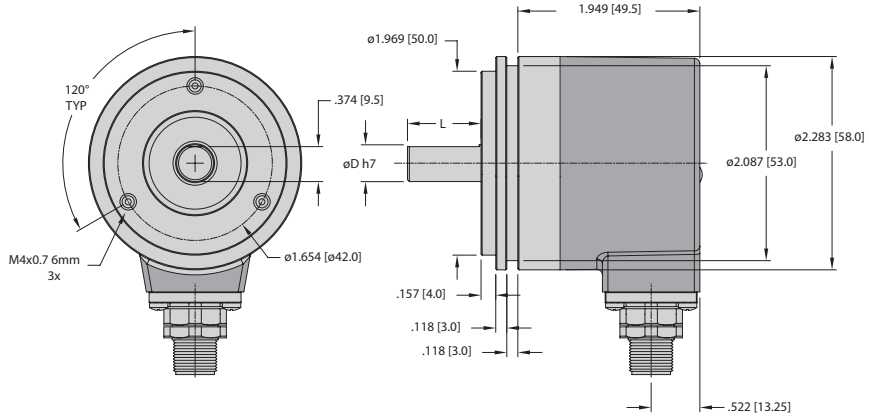

RM-105 Flange C
Connection B1M12

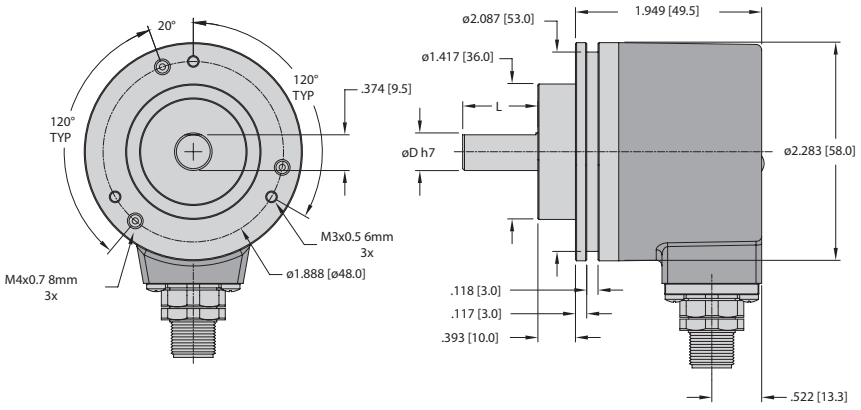

We reserve the right to make technical alterations without prior notice.

Absolute, Multiturn Type RM-105 (Shaft) / RM-106 (Hollow Shaft) — Modbus

Dimensions: RM-106 Shaft Version

RM-106 Flange T
Connection B1M12

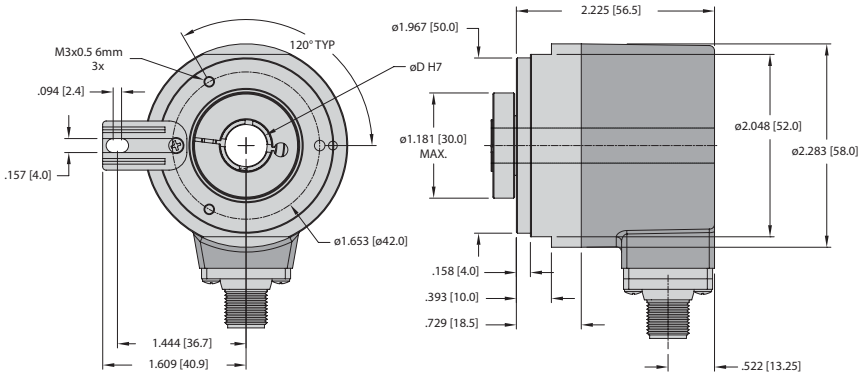

RM-106 Flange E
Connection B1M12

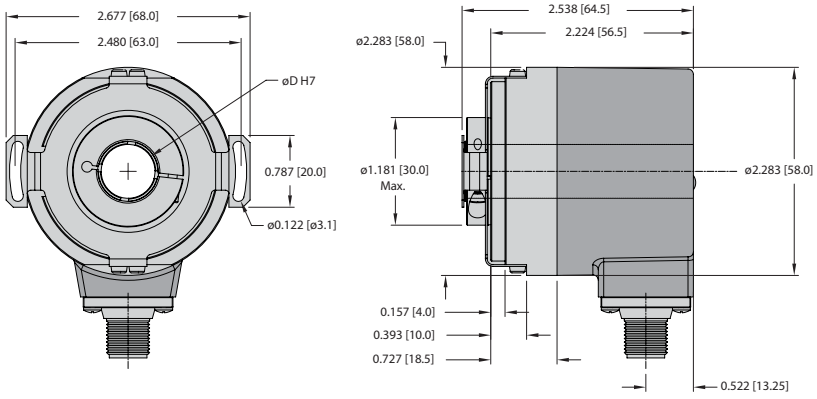

Mounting advice:
The flanges and shafts of the encoder and drive should not be rigidly coupled together at the same time. We recommend the use of suitable couplings (see page G1, Accessories).

We reserve the right to make technical alterations without prior notice.

Absolute, Multiturn Type RM-89 (Shaft) / RM-90 (Blind Hollow Shaft) DeviceNet



High rotational speed | Temperature | High IP | High shaft load capacity | Shock/vibration resistant

Reliable

- Heavy duty resolver with DeviceNet network communication.
- Wide temperature range of -40 to +185 °F (-40 to +85 °C).
- Two status LED's present to determine the state of the device.



DeviceNet

Fast

- Position response time of 1 ms.
- Fast commissioning with programmable parameters stored in internal non-volitile memory for fast retrieval.
- M12 connector ensures fast, simple, error-free connection.

Versatile

- Node address and baud rate set with rotary and DIP switches.
- 28 bits total resolution, shafts up to 0.625", blind hollow shafts up to 14 mm.
- Aluminum housing standard with optional stainless steel housing material for harsh environments.

Mechanical Characteristics:

Max. speed:	6000 rpm
Starting torque at 77 °F (25 °C):	
6mm, 10mm, 0.25" and 0.375" shaft	2.0 oz-in (0.01 Nm)
All blind hollow shaft	6.0 oz-in (0.04 Nm)
0.625" shaft	6.0 oz-in (0.04 Nm)
Moment of inertia:	
6mm, 10mm, 0.25" and 0.375" shaft	6.0×10^{-4} oz-in-sec^2 (0.04kgm^2)
All blind hollow shaft	7.0×10^{-4} oz-in-sec^2 (0.05 kgm^2)
0.625" shaft	8.5×10^{-4} oz-in-sec^2 (0.06 kgm^2)
Radial load capacity of shaft:	40 lbs (178 N) [100 lbs (445N) for 0.625" shaft]
Axial load capacity of shaft:	20 lbs (89 N) [50 lbs (222N) for 0.625" shaft]
Weight:	<2.0 lbs (0.91 kg)
Protection:	IP67
Working temperature:	-40 to +185 °F (-40 to +85 °C)
Materials:	Shaft: stainless steel Flange: aluminum Housing: aluminum
Shock resistance:	50 g (500 m/s^2), 11 ms
Vibration resistance:	20 g (200 m/s^2), 5-2000 Hz

General Information about DeviceNet

DeviceNet is a protocol stack that implements the Common Industrial Protocol (CIP) over CANbus. The CIP is sponsored by the Open DeviceNet Vendors Association (ODVA) and is implemented over a variety of networks. The RM-89/RM-90 follows the Resolver Device Profile that is defined in the CIP specification.

We reserve the right to make technical alterations without prior notice.

Absolute, Multiturn Type RM-89 (Shaft) / RM-90 (Blind Hollow Shaft) DeviceNet

Electrical Characteristics:

Supply voltage:	11 - 25 VDC
Power Requirements:	1.5 W max. (50 mA @24 VDC typ.)

Device Characteristics:

Singleturn resolution:	1-65536 (16 bit), (scalable: 1-65536)
Multiturn resolution:	4096 (12 bit)
Total resolution:	scalable from 0 to 268,435,455 (28 bit)
Interface:	DeviceNet

The following functionalities are integrated:

Adjustable parameters
- Count Direction
- Scaling Function Control
- Counts per Turn
- Total Measuring Range
- Velocity Format
- Preset

Objects (CIP Objects)
- Assembly Object
- Position Sensor Object
- DeviceNet Object

Scaling Function Control Parameter
To help eliminate a rollover error (when the total measurement range is less than the total counts available), the position will return to zero before the full mechanical travel is completed. The Scaling Function Control Parameter can be enabled.

Rear side connection and display elements

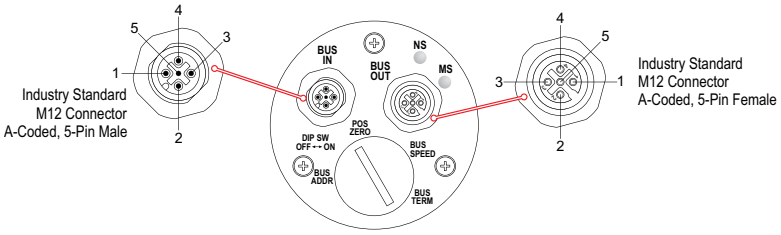

Standard Wiring (Bus):

Direction:	Bus In					Bus Out				
Signal:	CAN Ground	CAN_Low	CAN_High	Common (0V)	+V	CAN Ground	CAN_Low	CAN_High	Common (0V)	+V
M12 Eurofast:	1	5	4	3	2	1	5	4	3	2

Wiring Diagrams:

B	C
Female Encoder View	**Male Encoder View**
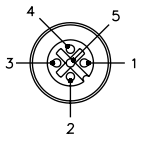	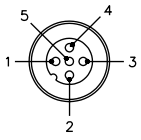
Bus Out	**Bus In**
Mating Cordset: [1] **RSC 572-*M/S3118**	Mating Cordset: [1] **RKC 572-*M/S3117**

[1] See Connectivity section H for corresponding cable color code.

We reserve the right to make technical alterations without prior notice.

Absolute, Multiturn Type RM-89 (Shaft) / RM-90 (Blind Hollow Shaft) DeviceNet

Part Number Key: RM-89 Shaft Version

A	B	C		D		E
RM-89S	6	S	-	9B28B	-	B2M12

A	Type
RM-89S	Ø 2.5", Shaft, IP67 Shaft Seal

B	Shaft (Ø x L)
6	Ø 6 mm x 10 mm
10	Ø 10 mm x 7/8" [1]
A0	Ø 1/4'' x 7/8''
A1	Ø 3/8'' x 7/8''
A4	Ø 5/8" x 1.3" [2]

[1] = 10 mm x 20mm for Flange 'S'
[2] = Only available Flange 'R'

C	Flange
S	Ø 58 mm Servo Flange
S0	Ø 2.5" Servo Flange
R	2.5" Square Flange

D	Voltage Supply and Output Type
9B28B	11-25 VDC, DeviceNet

E	Type of Connection
B2M12	Axial 2 x M12 Eurofast Connectors

Part Number Key: RM-90 Blind Hollow Shaft Version

A	B	C		D		E
RM-90B	10	E	-	9B28B	-	B2M12

A	Type
RM-90B	Ø 2.5", Blind Hollow Shaft, IP67 Shaft Seal

B	Bore (1.1" Insertion Depth)
10	Ø 10 mm
12	Ø 12 mm
14	Ø 14 mm
15	Ø 15 mm
A1	Ø 3/8"
A3	Ø 1/2"

C	Flange
E	Ø 63 mm Flange w/ Slotted Flex Mount

D	Voltage Supply and Output Type
9B28B	11-25 VDC, DeviceNet

E	Type of Connection
B2M12	Axial 2 x M12 Eurofast Connectors

Accessories:

- See page H1, Connectivity, for cables and connectors
- See page G1, Accessories and couplings

We reserve the right to make technical alterations without prior notice.

Absolute, Multiturn Type RM-89 (Shaft) / RM-90 (Blind Hollow Shaft) DeviceNet

Dimensions: RM-89 Shaft Version

RM-89 Flange S
Connection B2M12

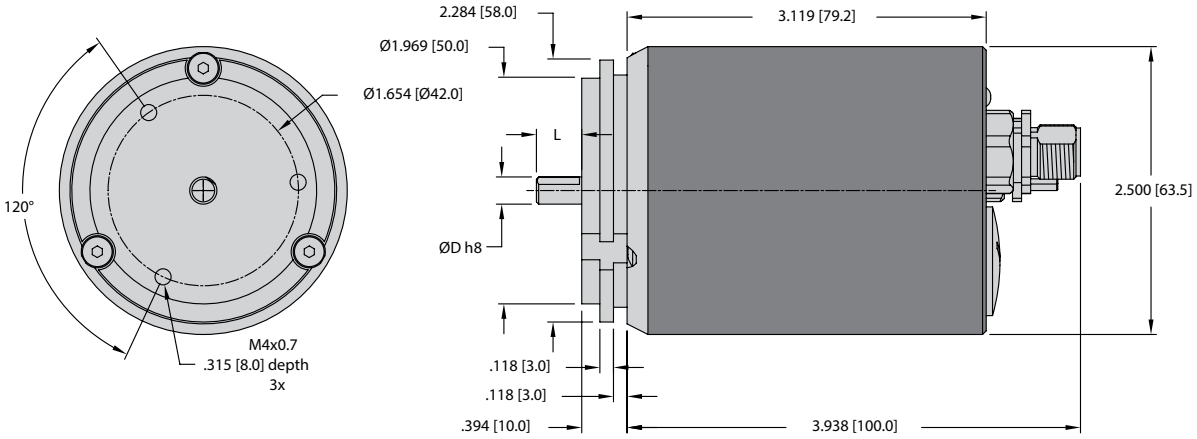

RM-89 Flange S0
Connection B2M12

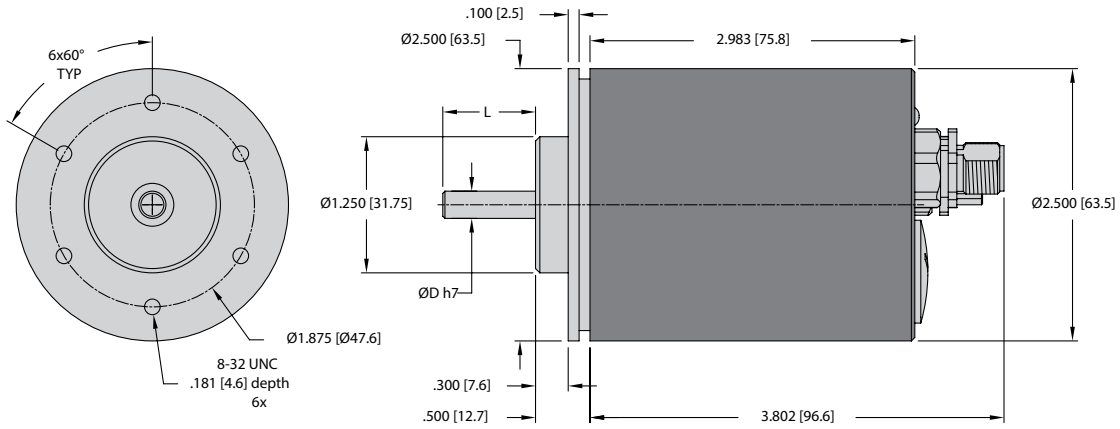

RM-89 Flange R
Connection B2M12

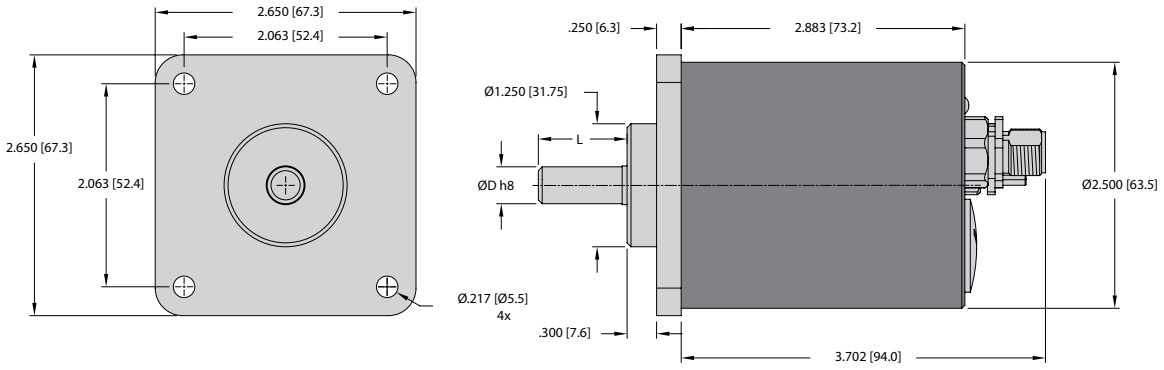

We reserve the right to make technical alterations without prior notice.

Turck Inc. | 3000 Campus Drive, Minneapolis, MN 55441 | T +1 800 544 7769 | F +1 763 553 0708 | www.turck.com

Absolute, Multiturn Type RM-89 (Shaft) / RM-90 (Blind Hollow Shaft) DeviceNet

Dimensions: RM-90 Blind Hollow Shaft Version

RM-90 Flange E
Connection B2M12

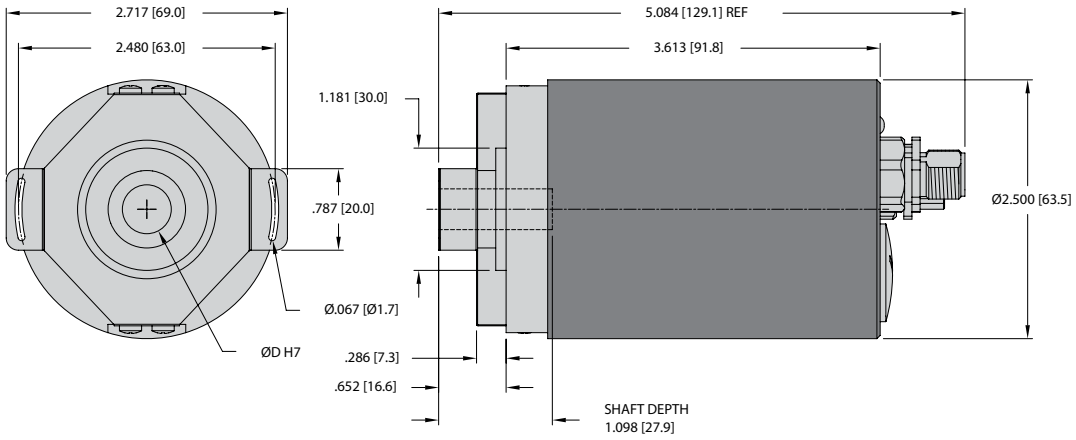

We reserve the right to make technical alterations without prior notice.

Absolute, Multiturn Type RA-174 (Large Hollow Shaft)

Robust
- **Decoupling of hollow shaft and encoder.**
- **Solid housing.**

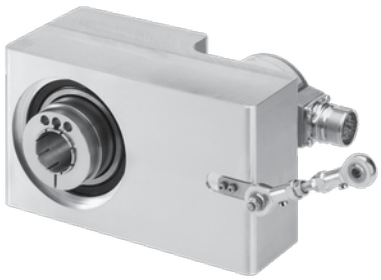

Versatile
- **Can be combined with all Ø58 mm solid shaft encoders.**
- **Many variants for clamping ring attachment.**
- **Three different torque stop lengths.**

Mechanical Characteristics

Maximum speed (continuous operation):	77 °F [25 °C]	2500 rpm
	104 °F [40 °C]	1750 rpm
	131 °F [55 °C]	1000 rpm
	158 °F [70 °C]	250 rpm
Maximum speed (short-term operation)[1]:	77 °F [25 °C]	4500 rpm
	104 °F [40 °C]	3250 rpm
	131 °F [55 °C]	2000 rpm
	158 °F [70 °C]	750 rpm
Starting torque at 73.4 °F [23 °C]:		max. 2124 oz-in. [15 Nm]
Weight:		approx. 7.7 lbs [3.5 kg]
Protection acc. to EN 60529/DIN 40050-9:		IP64
Working temperature range:		-32 to +158 °F (-0 to +70 °C)
Material:	housing	Aluminum
	shaft	stainless steel

[1] 50% duty cycle, switch on time max. 5 min.

Electrical Characteristics:

The electrical characteristics and the connection can be found in the catalog pages of the relevant encoder.

Large Bore Assembly	Encoder Description
RA-174*****-116T-7ASARNS-H1151	RM-116T10C-7ASARNS-H1151
RA-174T*****-116T-8BSARNS-H1151	RM-116T10C-8BSARNS-H1151
RA-174T*****-103T-3C13S12M-12M23	RM-103T10C-3C13S12M-12M23
RA-174T*****-105T-9N32B-B3M12	RM-105T10C-9N32B-B3M12
RA-174T*****-105T-9D38B-B2M12/N46	RM-105T10C-9D38B-B2M12/N46
RA-174T*****-105T-9P32B-B1M12	RM-105T10C-9P32B-B1M12
RA-174T*****-29T-9A28B-R3M12/N46	RM-29T10C-9A28B-R3M12/N46
RA-174T*****-29T-9C28B-R3M12	RM-29T10C-9C28B-R3M12
RA-174T*****-29T-9E28B-R3M12	RM-29T10C-9E28B-R3M12

We reserve the right to make technical alterations without prior notice.

Turck Inc. | 3000 Campus Drive, Minneapolis, MN 55441 | T +1 800 544 7769 | F +1 763 553 0708 | www.turck.com

Absolute, Multiturn Type RA-174 (Large Hollow Shaft)

Part Number Key: RA-174

A	B	C	D		E	F		G		H		I
RA-174	E	16	T2	-	29	S	-	9D28B	-	R3M12	/	N46

A	Type
RA-174	Large Bore Accessory

B	Clamping Ring Location
E	Encoder Side
T	Torque Arm Side

C	Bore
16	Ø 16 mm
20	Ø 20 mm
24	Ø 24 mm
25	Ø 25 mm
28	Ø 28 mm
30	Ø 30 mm
38	Ø 38 mm
42	Ø 42 mm
45	Ø 45 mm
A4	Ø 5/8"
A6	Ø 1"

D	Torque Arm Length
T2	2.76" (70 mm)
T3	3.93" (100 mm)
T4	5.91" (150 mm)

E	Encoder Type
29	RM-29, CANopen, EtherCat, PROFIBUS-DP, PROFINET IO
103	RM-103, SSI
105	RM-105, CANopen, EtherNet/IP, Modbus
116	RM-116, Analog

F	Encoder IP Rating
S	High IP Rating *
T	Low IP Rating*

*Rating Dependant on Encoder Selected

G	Voltage Supply and Output Type
Dependant on Encoder Selected	

H	Type of Connection
Dependant on Encoder Selected	

I	Specials
Dependant on Encoder Selected	

Accessories:

- See page H1, Connectivity, for cables and connectors

We reserve the right to make technical alterations without prior notice.

Absolute, Multiturn Type RA-174 (Large Hollow Shaft)

Dimensions: RM-174

RA-174
Front View

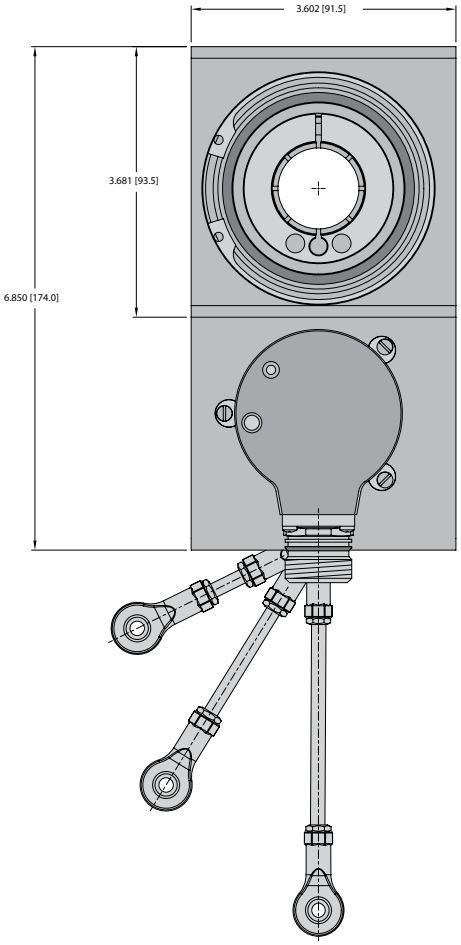

RA-174
Clamping Ring Location: E

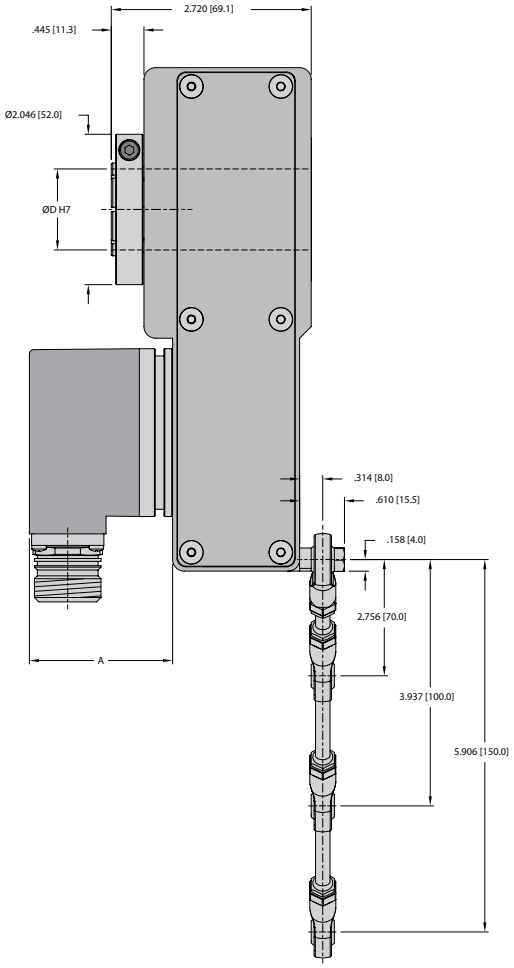

We reserve the right to make technical alterations without prior notice.

[1] Recommended torque for clamping ring with M3: 141.6 oz-in. [1.0 Nm], with hollow shaft ≥ Ø 38 mm
Recommended torque for clamping ring with M4: 283.6 oz-in. [2.0 Nm], with hollow shaft ≤ Ø 30 mm

Notes: Dimension A depends on the encoder used. H7 fit for all bore options.

Turck Inc. | 3000 Campus Drive, Minneapolis, MN 55441 | T +1 800 544 7769 | F +1 763 553 0708 | www.turck.com

Absolute, Multiturn Type RA-174 (Large Hollow Shaft)

Dimensions: RM-174

RA-174
Front View

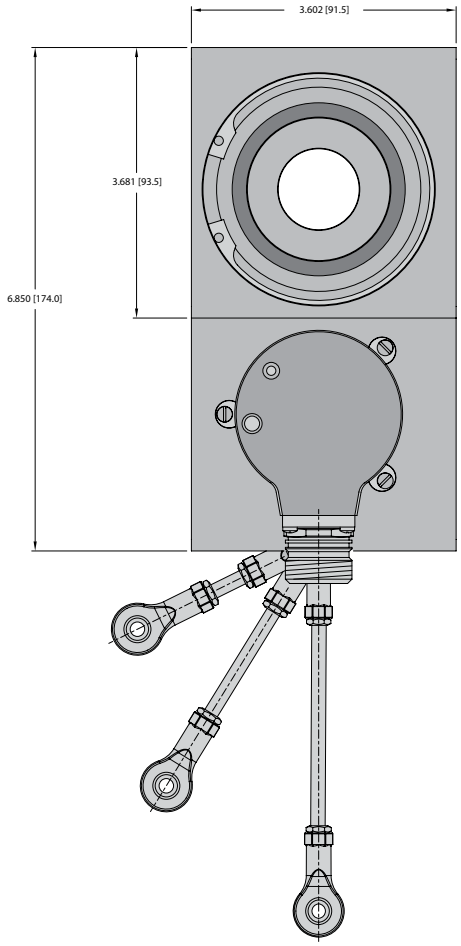

RA-174
Clamping Ring Location: T

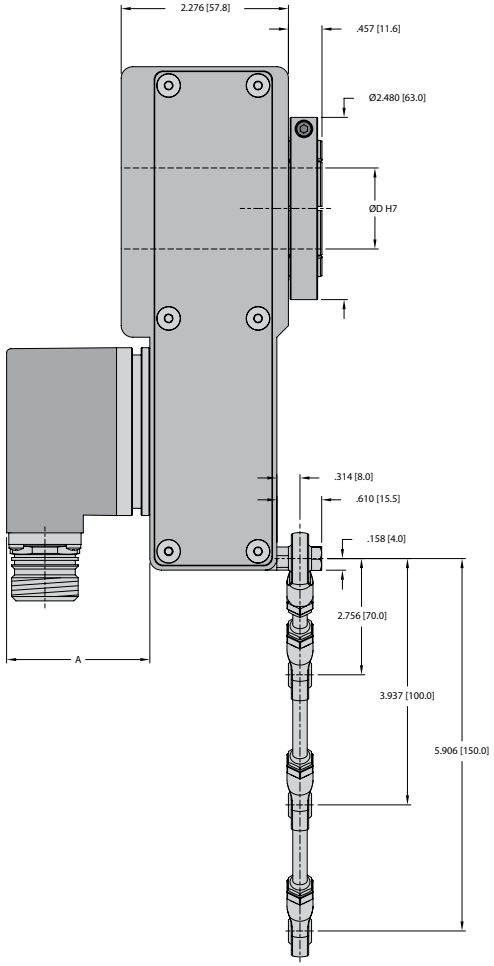

[1] Recommended torque for clamping ring with M3: 141.6 oz-in. [1.0 Nm], with hollow shaft ≥ Ø 38 mm
Recommended torque for clamping ring with M4: 283.6 oz-in. [2.0 Nm], with hollow shaft ≤ Ø 30 mm

Notes: Dimension A depends on the encoder used. H7 fit for all bore options.

We reserve the right to make technical alterations without prior notice.

Notes:

We reserve the right to make technical alterations without prior notice.

Turck Inc. | 3000 Campus Drive, Minneapolis, MN 55441 | T +1 800 544 7769 | F +1 763 553 0708 | www.turck.com

Series	Type	Page
Encoder Accessories		
	Flex Brackets	**G2**
	Torque Pins	**G8**
	Torque Stop	**G8**
	Couplings	**G9**
	Spring Loaded Bracket	**G10**
	Assembly Bell	**G10**
	Servo Cleats	**G11**
	Mounting Attachments	**G11**
	Brackets	**G13**
	Rack and Pinion	**G13**
	Wheels	**G14**
	Bearing Unit	**G15**

Flex Brackets

Part Number:
RA-FB

Description:
Flex bracket for Hollow Shaft
RI-09, RS-31, RS-33

Kit includes: (2) M2.5x6 mm screws



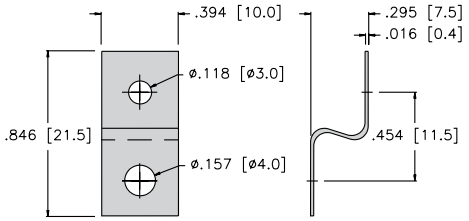

Part Number:
RA-E-46

Description:
Slotted flex mount for hollow shaft series RI-05, RI-09, RS-07, RS-48, RS-49, RS-53, RM-50, RM-51

Kit includes: (2) M2.5x6 mm screws



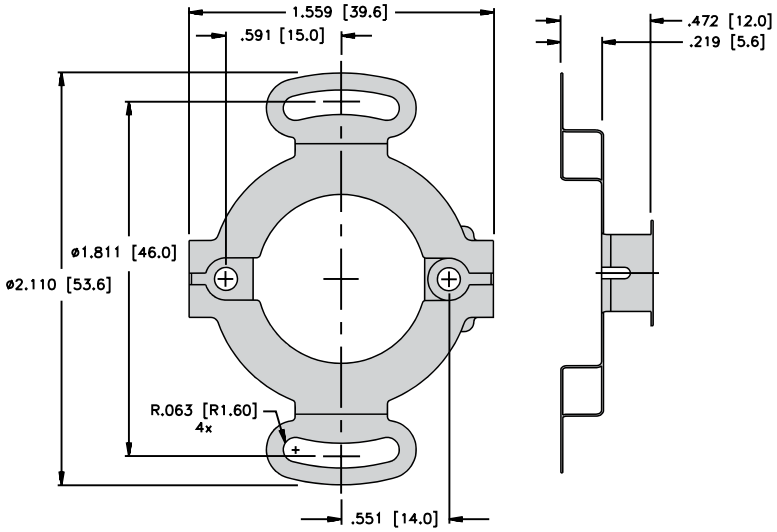

Part Number:
RA-S7

Description: single point tether arm, short, for RI-12, RS-31, RS-33, RM-35, RM-36

Kit includes: (3) M3x6 mm screws

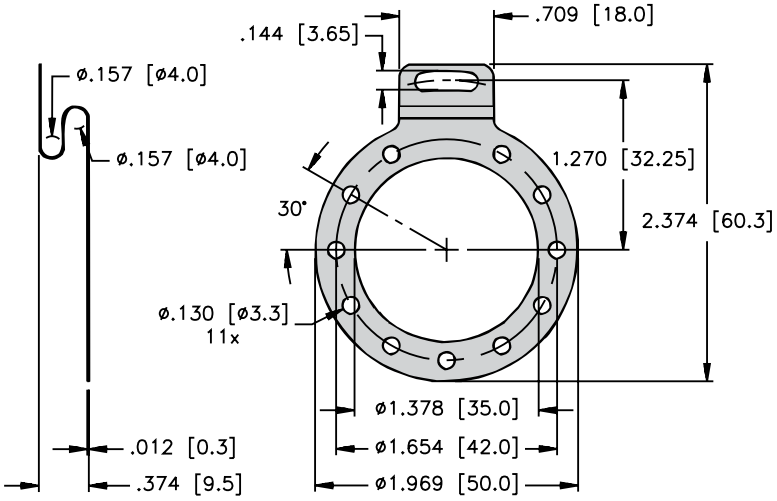

We reserve the right to make technical alterations without prior notice.

Turck Inc. | 3000 Campus Drive, Minneapolis, MN 55441 | T +1 800 544 7769 | F +1 763 553 0708 | www.turck.com

Flex Brackets

Part Number:
RA-S6

Description:
Single point tether arm, medium, for RI-12, RS-31, RS-33, RM-35, RM-36,

Kit includes: (3) M3x6 mm screws

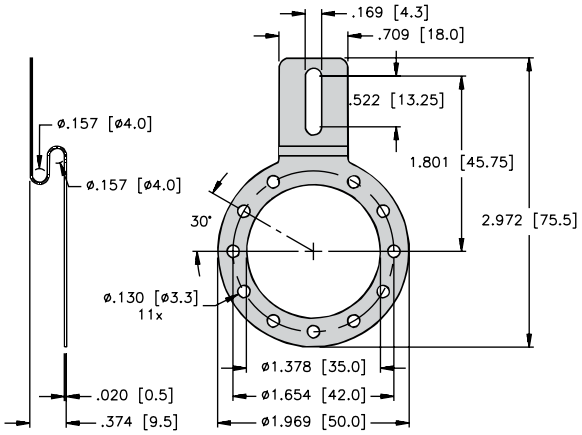

Part Number:
RA-E2

Description:
Flex mount for hollow shaft series RI-12

Kit includes:
(3) M3x6 mm screws,
(3) lock washers



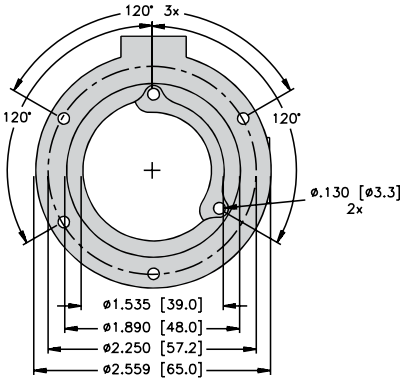

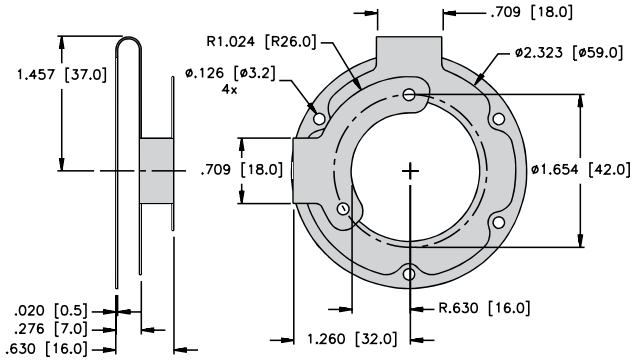

We reserve the right to make technical alterations without prior notice.

Flex Brackets

Part Number:
RA-E1

Description:
Flex mount, pitch circle ø 65 mm for RI-12, RS-31, RS-33, RM-35, RM-36

Kit includes: (2) screws to attach to encoder

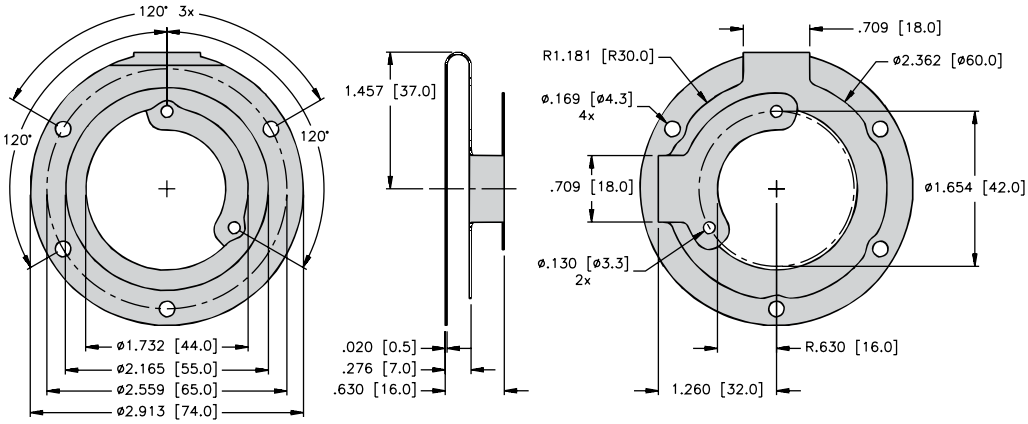

Part Number:
RA-E

Description:
Slotted flex mount for RI-12(flange E), RS-31, RS-33, RM-35, RM-36

Kit includes: (4) M2.5x6 screws for RI-12, RS-31, RS-33

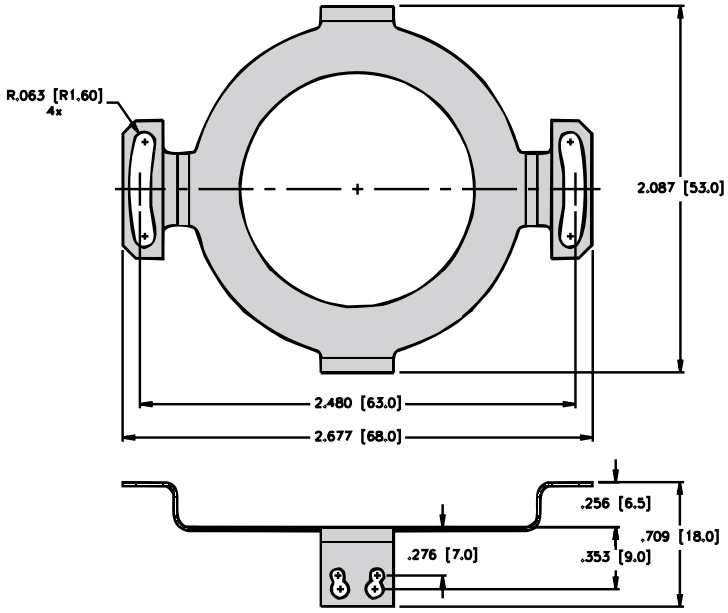

We reserve the right to make technical alterations without prior notice.

Turck Inc. | 3000 Campus Drive, Minneapolis, MN 55441 | T +1 800 544 7769 | F +1 763 553 0708 | www.turck.com

Flex Brackets

Part Number:
RA-SB

Description:
Single point tether arm for hollow shaft series RI-12

Kit includes: (3) M3x6 mm screws



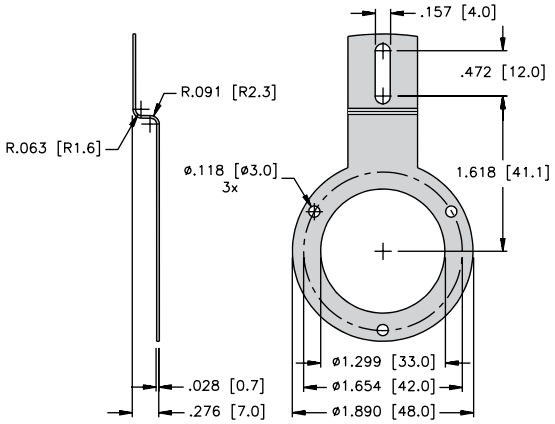

Part Number:
RA-SA

Description:
Single point tether arm for hollow shaft series RI-12, RS-31, RS-33, RM-35, RM-36

Kit includes: (3) M3x6 mm screws



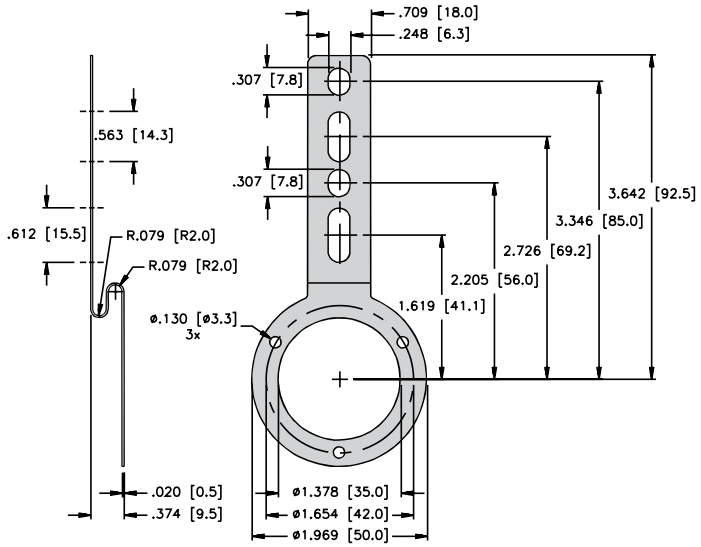

Part Number:
RA-S1

Description:
Standard single point tether arm for hollow shaft series RI-12

Kit includes: (1) nylon step washer (9.5 mm inside diameter),
(4) M3x6 screws,
(4) lock washers

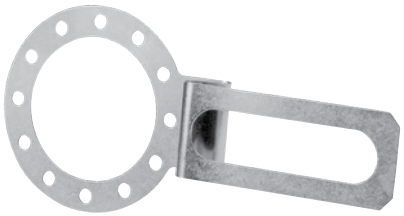

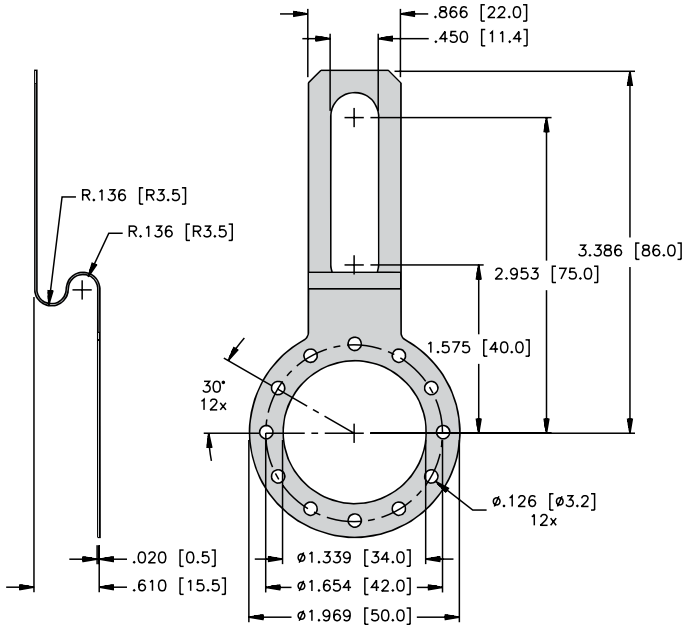

We reserve the right to make technical alterations without prior notice.

Flex Brackets

Part Number:
RA-E1-SM

Description:
Flex mount for hollow shaft series,
RS-31, RS-33, RM-35, RM-36 (flange E1)

Kit includes: (2) M2.5x6 mm screws



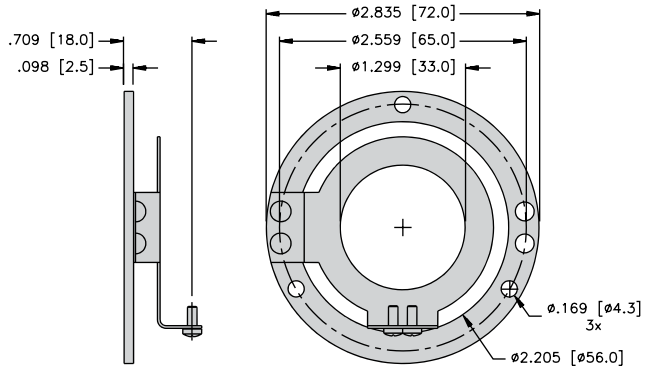

Part Number:
RA-43-E2

Description:
4.5" C-face tether for RI-43

Kit includes: (3) M4x5 mm screws,
(1) 3/8-16 x 1/0" bolt, (1) 3/8-16 nut,
(1) Nylon step washer, (1) Nylon mating washer



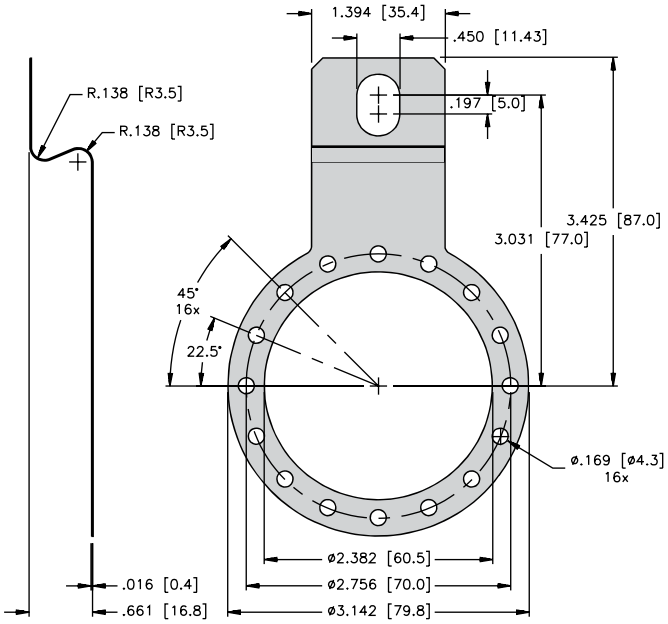

We reserve the right to make technical alterations without prior notice.

Turck Inc. | 3000 Campus Drive, Minneapolis, MN 55441 | T +1 800 544 7769 | F +1 763 553 0708 | www.turck.com

Flex Brackets

Part Number:
RA-43-S8

Description:
Tether arm (long) for RI-43

Kit includes: (3) M4x5 mm screws

Part Number:
RA-43-S8-US

Description:
Tether arm (long) for RI-43

Kit includes: (3) M4x5 mm screws,
(1) 1/4-20 x 1/0" bolt,
(3) 1/4-20 nuts, (1) Nylon step washer,
(1) Nylon mating washer



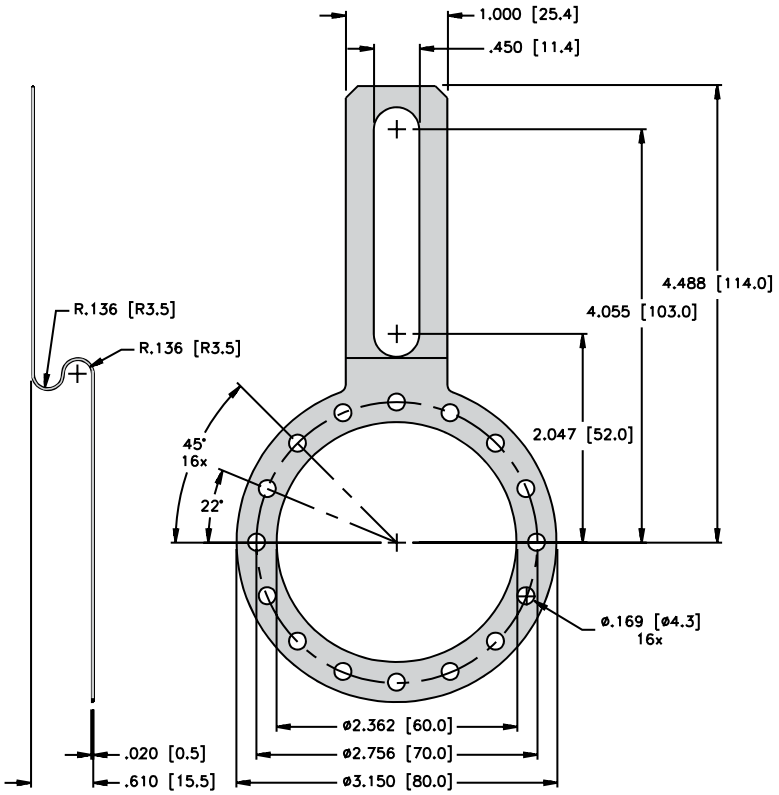

We reserve the right to make technical alterations without prior notice.

Torque Pins (Standard and Metric)

Part Number	Description	A	B	C	D	E	F	G (Radius)	H
RA-TP-3-S	RI-02 3 mm, smooth	0.472 (12.0 mm)	0.118 (3.0 mm)	----	----	----	----	0.276 (7.0 mm)	N/A
RA-TP-4-S	RI-09 4 mm, smooth	0.630 (16.0 mm)	0.157 (4.0 mm)	----	----	----	----	0.276 (7.0 mm)	N/A
RA-TP-4-4	RI-12 4 mm, M4 thread	1.181 (30.0 mm)	0.157 (4.0 mm)	0.197 (5.0 mm)	0.315 (8.0 mm)	----	M4x0.7	0.276 (7.0 mm)	0.276 (7.0 mm)
RA-TP-4-832	RI-12 4 mm, 8-32 thread	1.181 (30.0 mm)	0.157 (4.0 mm)	0.250 (6.35 mm)	0.374(9.5 mm)	----	8-32	0.276 (7.0 mm)	1/4" (6.35 mm)
RA-TP-6-6	RI-43 6 mm, M6 thread	1.575 (40.0 mm)	0.236 (6.0 mm)	0.354 (9.0 mm)	0.551 (14.0 mm)	0.394 (10.0 mm)	M6x1	0.276 (7.0 mm)	0.394 (10.0 mm)



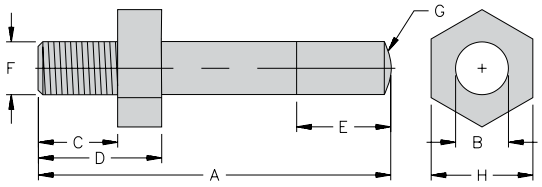

Torque Stop

Part Number:
RA-T1

Description:
Torque stop for RI-05, RI-09, RI-12, RS-07, RS-31, RS-33, RS-48, RS-49, RS-53, RM-35, RM-36, RM-50, RM-51

Kit includes:
(1) M2.5x5 mm screw



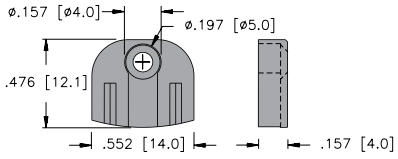

Part Number:
RA-T

Description:
Torque stop for RI-05, RI-09, RI-12, RS-07, RS-31, RS-33, RS-48, RS-49, RS-53, RM-35, RM-36, RM-50, RM-51

Kit includes:
(1) M2.5x5 mm screw



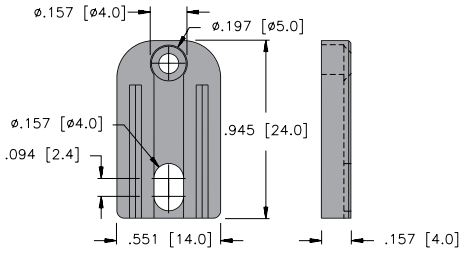

Part Number:
RA-43-S5

Description:
Torque stop (short) for RI-43 large bore series

Kit includes:
(2) M2.5x5 mm screws



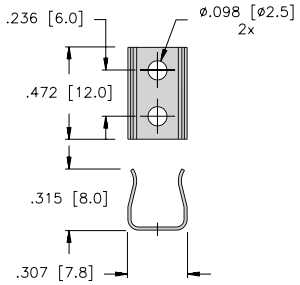

Part Number:
RA-43-S4

Description:
Torque stop (long) for RI-43 large bore series

Kit includes
(2) M2.5x5 mm screws



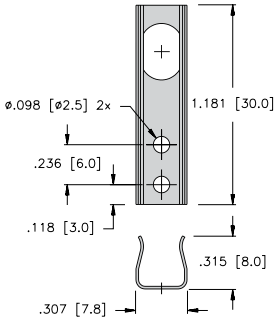

We reserve the right to make technical alterations without prior notice.

Turck Inc. | 3000 Campus Drive, Minneapolis, MN 55441 | T +1 800 544 7769 | F +1 763 553 0708 | www.turck.com

Couplings

Turck precision flexible couplings are engineered for optimum performance with Turck encoders. Designed to connect two misaligned shafts, our beam style couplings offer superior performance, reliability, long life and are easy to install.

Installation: Clean and degrease all shafts, check parallel alignment. Do not exceed misalignment and axial motion specifications. Clamp one end of the coupling to the drive shaft. Insert encoder into the other end. Tap lightly on the coupling hub to stabilize system. Tighten the second screw.

Note: Light should be visible through the beams.



Coupling Tabulation - in (mm)

Part Number	D	L	Parallel	Angular Misalignment	Axial Motion
TFC075-XXX-XXX	0.745 (19.0)	0.750 (19.0)	0.006 (0.15)	3°	±0.006 (0.13)
TFC100-XXX-XXX	0.995 (25.4)	1.000 (25.4)	0.005 (0.127)	3°	±0.005 (0.13)
TFC125-XXX-XXX	1.240 (31.5)	1.250 (31.75)	0.005 (0.127)	2°	±0.005 (0.13)

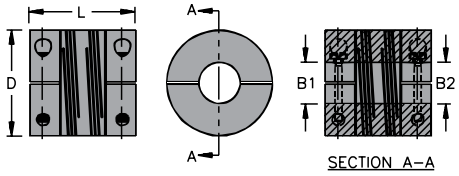

B1 = encoder shaft
B2 = drive shaft

Part Number	Coupling Diameter	Encoder Shaft	Drive Shaft
TFC075-250-M04	0.750 in	0.25 in	4 mm
TFC075-250-M05	0.750 in	0.25 in	5 mm
TFC075-250-M06	0.750 in	0.25 in	6 mm
TFC075-250-M08	0.750 in	0.25 in	8 mm
TFC075-250-125	0.750 in	0.25 in	0.125 in
TFC075-250-187	0.750 in	0.25 in	0.188 in
TFC075-250-250	0.750 in	0.25 in	0.25 in
TFC075-06M-M04	0.750 in	6 mm	4 mm
TFC075-06M-M05	0.750 in	6 mm	5 mm
TFC075-06M-M06	0.750 in	6 mm	6 mm
TFC075-06M-M08	0.750 in	6 mm	8 mm
TFC075-06M-125	0.750 in	6 mm	0.125 in
TFC075-06M-187	0.750 in	6 mm	0.188 in
TFC075-06M-250	0.750 in	6 mm	0.250 in
TFC100-375-125	1.000 in	0.375 in	0.125 in
TFC100-375-187	1.000 in	0.375 in	0.188 in
TFC100-375-250	1.000 in	0.375 in	0.25 in
TFC100-375-375	1.000 in	0.375 in	0.375 in

Part Number	Coupling Diameter	Encoder Shaft	Drive Shaft
TFC100-375-M04	1.000 in	0.375 in	4 mm
TFC100-375-M05	1.000 in	0.375 in	5 mm
TFC100-375-M06	1.000 in	0.375 in	6 mm
TFC100-375-M08	1.000 in	0.375 in	8 mm
TFC100-375-M10	1.000 in	0.375 in	10 mm
TFC125-12M-125	1.250 in	12 mm	0.125 in
TFC125-12M-187	1.250 in	12 mm	0.188 in
TFC125-12M-250	1.250 in	12 mm	0.250 in
TFC125-12M-375	1.250 in	12 mm	0.375 in
TFC125-12M-500	1.250 in	12 mm	0.5 in
TFC125-12M-M06	1.250 in	12 mm	6 mm
TFC125-12M-M08	1.250 in	12 mm	8 mm
TFC125-12M-M10	1.250 in	12 mm	10 mm
TFC125-12M-M12	1.250 in	12 mm	12 mm
TFC125-375-M12	1.250 in	0.375 in	12 mm
TFC125-375-500	1.250 in	0.375 in	0.5 in

Other options available on request.

We reserve the right to make technical alterations without prior notice.

Spring Loaded Bracket

Part Number:
RA-SB-58

Description:
Spring loaded right angle bracket for measuring wheels and rack and pinion systems

Used with clamping flange 58 mm
face mount screws included



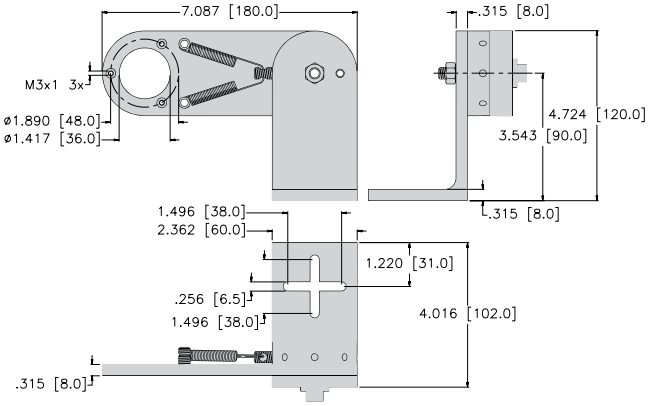

Assembly Bell

Part Number:
RA-AB-XXX-XXX

Description:
Assembly bell

Kit includes:
- Coupling
- Mounting screws

Purchase separately:
- Optional assembly with servo cleat RA-SC-58
- Used with servo flange Ø 58 mm



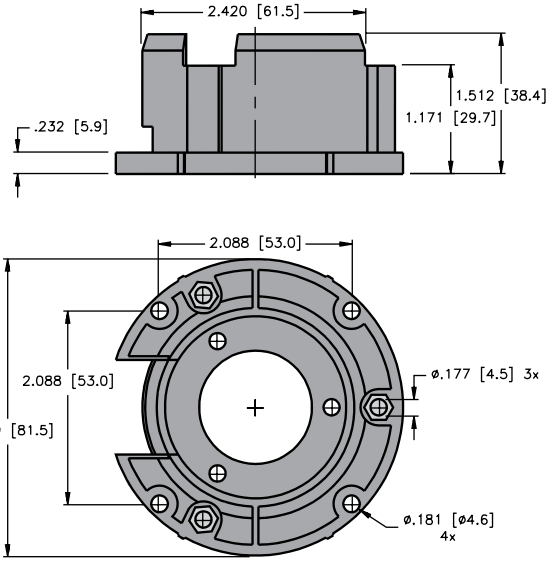

Part Number Key:
RA-AB-XXX-XXX

Bore diameter of coupling
B2 drive shaft

Bore diameter of coupling
B1 encoder shaft

Mounting Example:

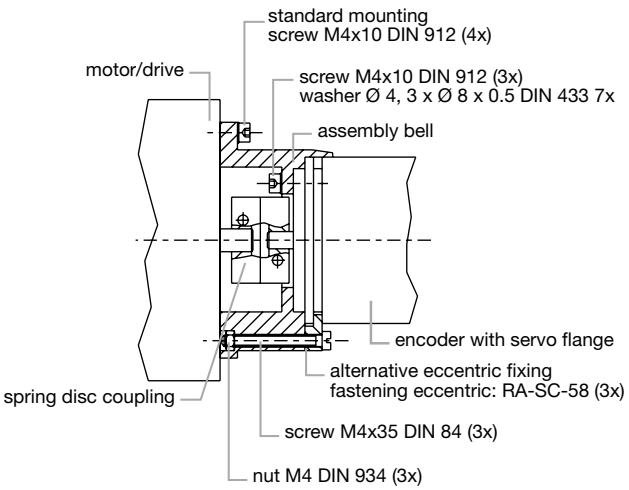



We reserve the right to make technical alterations without prior notice.

Turck Inc. | 3000 Campus Drive, Minneapolis, MN 55441 | T +1 800 544 7769 | F +1 763 553 0708 | www.turck.com

Servo Cleats

Part Number	For Encoder Type	D1 in. [mm]	D2 in. [mm]	D3 in. [mm]	A in. [mm]	B in. [mm]	C in. [mm]
RA-SC-36	36 mm servo flange	0.267 [6.8]	0.197 [5.0]	0.110 [2.8]	0.138 [3.5]	0.089 [2.25]	0.35 [0.9]
RA-SC-58	58 mm servo flange	0.350 [8.9]	0.256 [6.5]	0.126 [3.2]	0.220 [5.6]	0.114 [2.9]	0.047 [1.2]

- For use with rotary encoders with servo flange
- Kit includes: 3 cleats and 3 screws
- Chrome plated steel
- Galvanized nickel finish



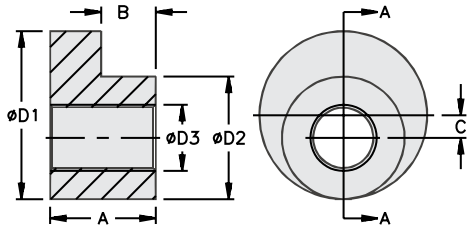

Mounting Attachments

Part Number	Description	A in. [mm]	B in. [mm]	C in. [mm]	D in. [mm]	E in. [mm]
RA-R-58-4	Square adapter flange	2.283 [58.0]	1.890 [48.0]	.157 [4.0]	.177 [4.5]	.157 [4.0]
RA-R-63-3		2.500 [63.5]	2.067 [52.5]	.118 [3.0]	.217 [5.5]	.295 [7.5]
RA-R-80-4		3.150 [80.0]	2.559 [65.0]	.157 [4.0]	.217 [5.5]	.295 [7.5]

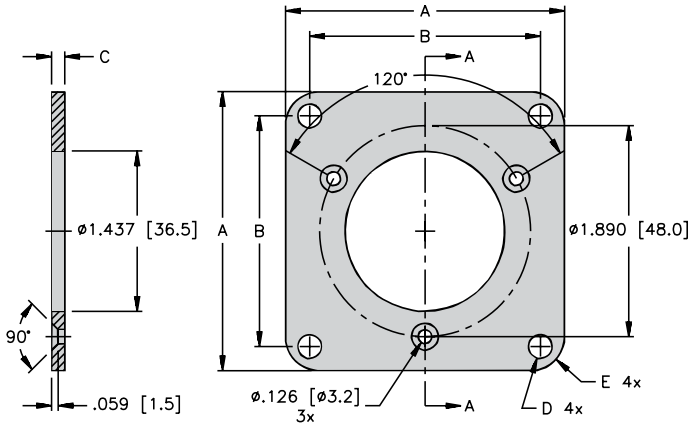

Part Number:
RA-R-70-10

Description:
Used with 58 mm clamping flange face mount kit

Kit includes: Mounting screws

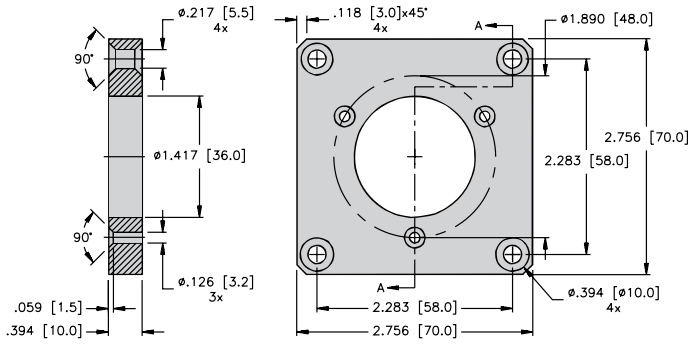

We reserve the right to make technical alterations without prior notice.

Mounting Attachments

Part Number:
RA-S-70-5

Description:
70 mm flange for shafted encoders RI-10

Kit includes: 3 screws to attach flange to encoder

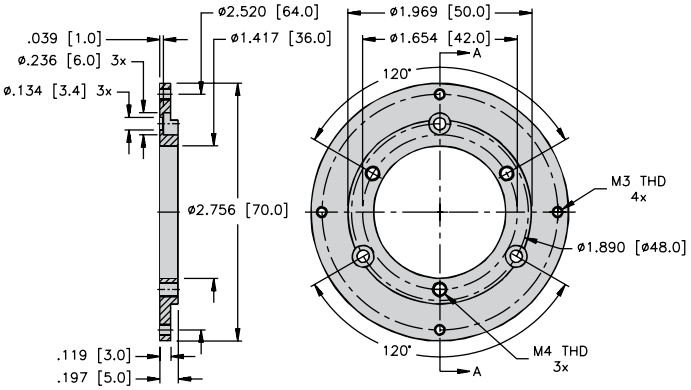

Part Number:
RA-S-70-10

Description:
70 mm flange for shafted encoders RI-10, RS-24, RS-25, RM-28, RM-29

Kit includes: 3 screws to attach flange to encoder

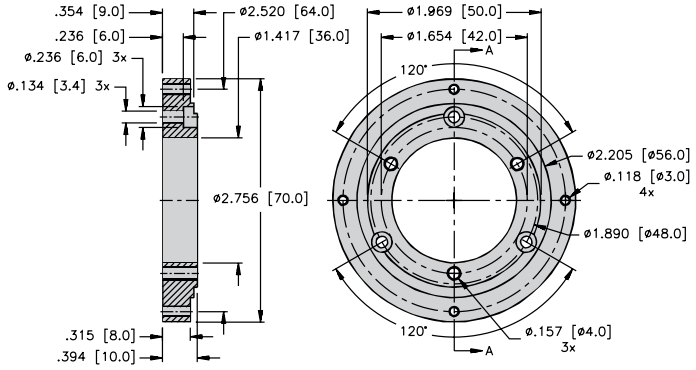

Part Number:
RA-S-65-6

Description:
65 mm flange for shafted encoders RI-10, RS-24, RS-25, RM-28, RM-29

Kit includes: 3 screws to attach flange to encoder

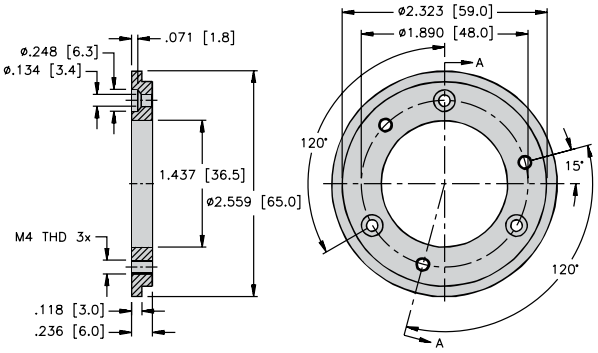

Part Number:
RA-S-58-10

Description:
58 mm flange to convert encoders with clamping flange into servo flange

Kit includes: 3 screws to attach flange to encoder

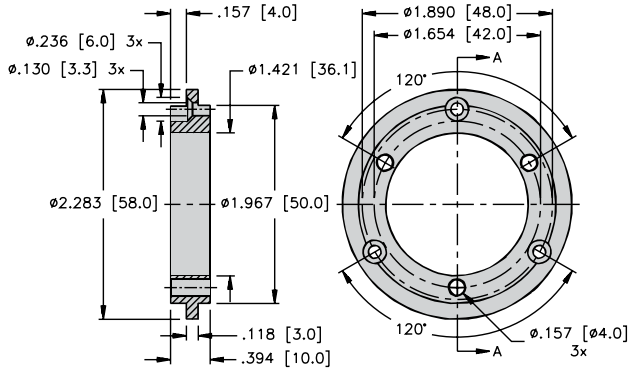

We reserve the right to make technical alterations without prior notice.

Brackets

Part Number:
RA-MB-58

Description:
Right angle bracket
Used with clamping flange Ø 58 mm face mount
Screws Included



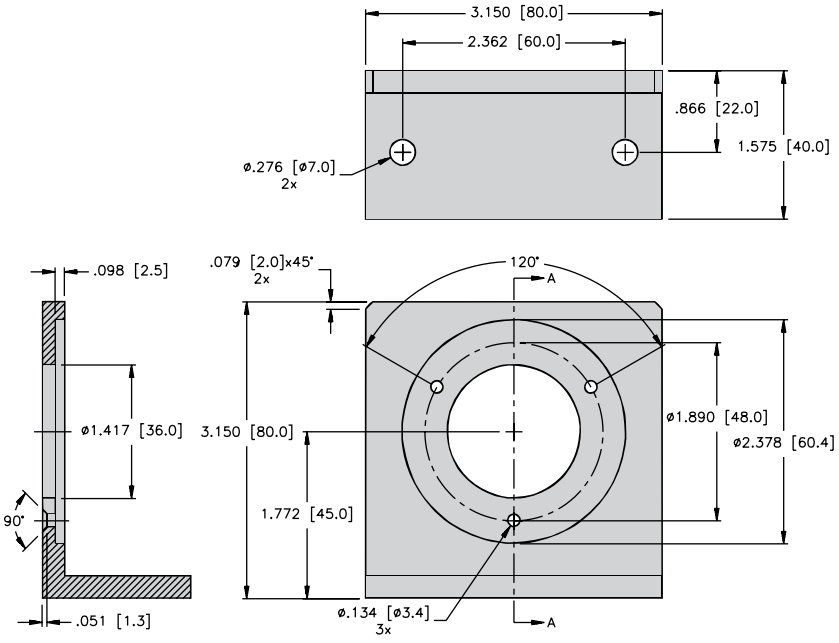

Rack and Pinion

Part Number:
RA-RACK-1000

Description:
Rack

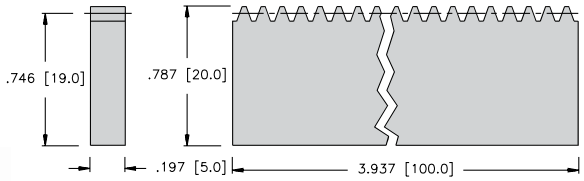

Part Number:
RA-P-6
RA-P-10

Description:
Pinion



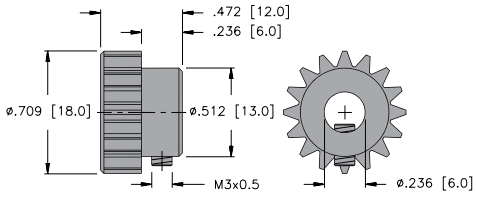

Part Number:
RA-RACK-95

Description:
Support

We reserve the right to make technical alterations without prior notice.

Wheels

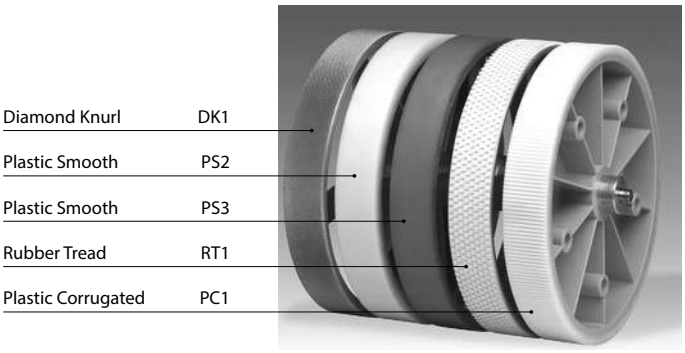

Selection of the measuring wheel profile according to the surface of the measured material

Surface of the Measured Material	Recommended Profile No.
Cardboard	DK1, PS1, PS2, PS3, RS1, RT1
Wood	DK1, PS1, PS2, PS3, RS1, RT1
Textile	DK1, RT1, PC1
Plastic (e.g., PVC, PE, ...)	PS1, PS2, PS3, RS1
Paper	PS1, PS2, PS3, RS1
Wire	PS3, RS1
Bare metals	RT1
Varnished surfaces	RT1

Measuring Wheel No. 05

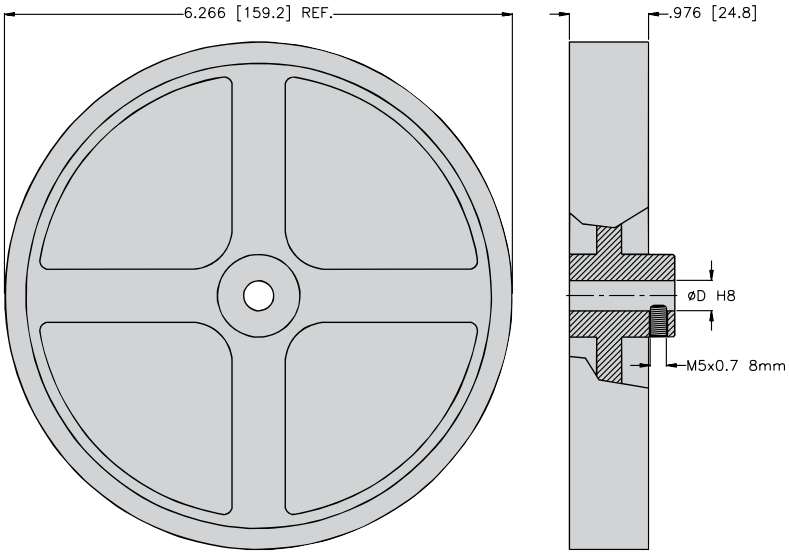

Measuring Wheel No. A9

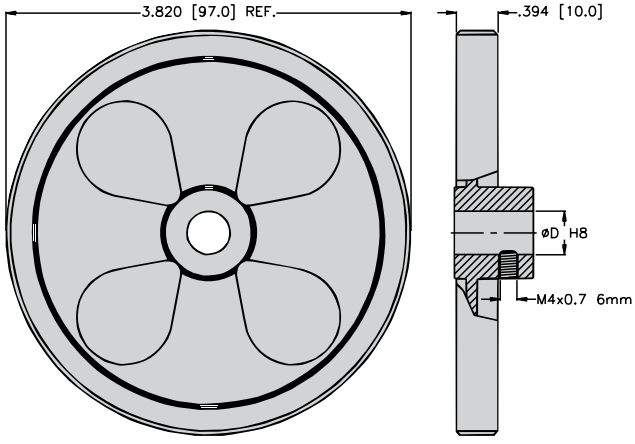

Measuring Wheel No. 02

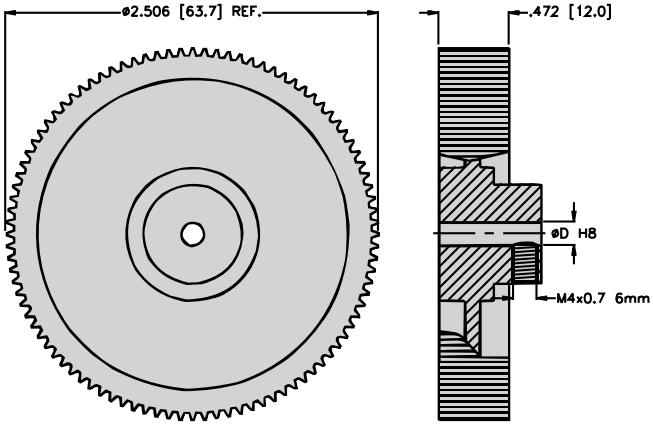

We reserve the right to make technical alterations without prior notice.

Turck Inc. | 3000 Campus Drive, Minneapolis, MN 55441 | T +1 800 544 7769 | F +1 763 553 0708 | www.turck.com

Wheels

A		B		C		D
RMW	-	02	-	DK1	-	6

"B" Measuring Wheel Circumference/Diameter/Width	"C" Profile Code	Coating	Coating Hardness Shore A	Wheel Body Material	Working Temperature (°C)	Weight (g)	"D" Standard Bore (mm) [1]
02 0.2 m/ø 63.7 mm/12 mm	**DK1**	Diamond knurl (aluminum)		Aluminum	-30 to +80	60	**6, 10**
	PS1	Polyurethane smooth	90	Aluminum	-30 to +80	60	**6, 10**
	RT1	Rubber tread	60	Aluminum	-30 to +80	60	**6, 10**
	PC1	Polyurethane corrugated	90	Aluminum	-30 to +80	60	**6**
05 0.5 m/ø 159.2 mm/25 mm	**DK1**	Diamond knurl (aluminum)		Aluminum	-30 to +80	350	**10**
	PS2	Polyurethane smooth	90	Plastic	-10 to +50	260	**10**
	PS1	Polyurethane smooth	90	Aluminum	-30 to +80	700	**10**
	PS3	Polyurethane smooth	90	Aluminum	-30 to +80	320	**10**
	RT1	Rubber tread	60	Aluminum	-30 to +80	700	**10**
	PC1	Polyurethane corrugated	90	Aluminum	-30 to +80	700	**10**
B0 6"/1.9"/0.47"	**DK1**	Diamond knurl (aluminum)		Aluminum	-30 to +80	40	**6**
A9 12"/3.82"/0.47"	**DK1**	Diamond knurl (aluminum)		Aluminum	-30 to +80	115	**10**
	PS1	Polyurethane smooth	90	Aluminum	-30 to +80	115	**10**
	RT1	Rubber tread	60	Aluminum	-30 to +80	110	**10**
	PC1	Polyurethane corrugated	90	Aluminum	-30 to +80	115	**10**
A9 12"/ø 3.82"/0.38"	**RS1**	Natural rubber smooth	75	Aluminum	-30 to +80	100	**10**

[1] Other bore diameters on request

Bearing Unit

Part Number:
RA-BU-10-10

Description:
Robust bearing unit for solid shaft encoders with clamping flange and shaft 10 mm

Speed: Max 6,000 RPM
Load: Radial: 135 lbs (600 N), Axial: 45 lbs (200 N)
Weight: 1.23 lbs (0.56 kg)
Protection: IP67 (when closure caps are used)

Kit includes:
- Bearing box
- (3) M4x25 cylindrical pins
- (1) O-ring

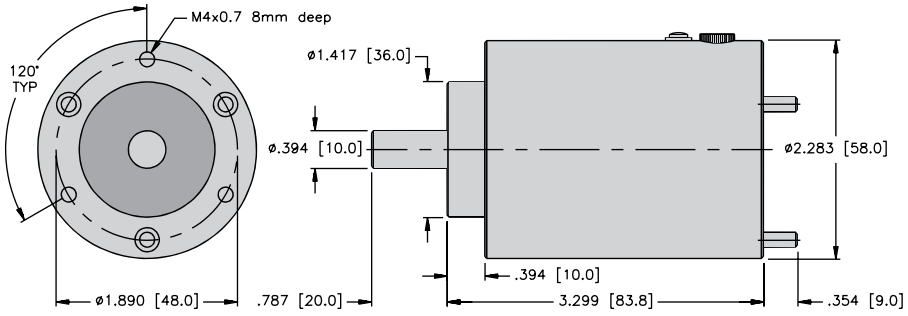





Unit shown with optional encoder attached.
Consult factory for additional information.

We reserve the right to make technical alterations without prior notice.

Notes:

We reserve the right to make technical alterations without prior notice.



CONNECTIVITY

SERIES	TYPE	PAGE
Cordsets	M12 Eurofast Cordsets	**H2**
	M12 Eurofast LED Cordsets	**H9**
	M12 Eurofast Field Wireable Connector	**H10**
	M23 Multifast Cordsets	**H11**
	M23 Multifast Field Wireable Connectors	**H11**
	Military Cordsets	**H12**
	Military Field Wireable Connectors	**H12**

We reserve the right to make technical alterations without prior notice.

4-Pin M12 Eurofast Cordsets Standard Plug Body

- Straight Female Connector
- NEMA 1, 3, 4, 6P and IEC IP68, IP69K Protection
- 250 VAC/300 VDC, 4 A



Drawing	Part Number	Cable	Features	Pinouts	
RK .. ** 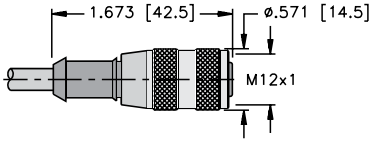 RKK .. ** 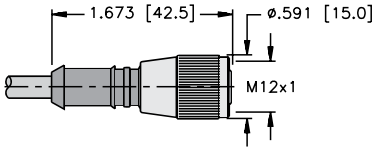 RKV .. ** 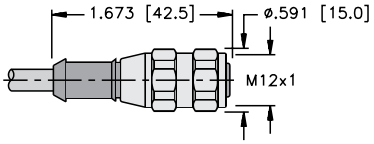	RK 4.41T-*	AWM PVC NAMUR Blue 4x22 AWG 221 °F (105 °C) 5.2 mm OD Cable #RF50598-*M†	Flexlife	1. BN 2. WH 3. BU 4. BK	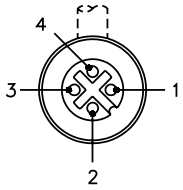
	RK 4.41T-*/S529	AWM PUR/Heavy Braid Double Jacket, Yellow 4x20 AWG 221 °F (105 °C) 5.8 mm OD Cable #RF50526-*M†	Cut/Abrasion Immune Braided Mechanical Shield		
	RK 4.43T-*	AWM PVC Yellow 4x22 AWG 221 °F (105 °C) 5.2 mm OD Cable #RF50530-*M†	Flexlife		
	RK 4.43T-*/S90	AWM PUR Yellow 4x22 AWG 221 °F (105 °C) 5.2 mm OD Cable #RF50613-*M†	Cut/Abrasion Immune		
	RK 4.4T-*	AWM PVC Grey 4x22 AWG 221 °F (105 °C) 5.2 mm OD Cable #RF50516-*M†	Flexlife		
	RK 4.4T-*/S90	AWM PUR Grey 4x22 AWG 221 °F (105 °C), 5.2 mm OD Cable #RF50532-*M†	Cut/Abrasion Immune		
	RK 4.4T-*/S101	AWM TPE Grey 4x22 AWG 221 °F (105 °C), 5.7 mm OD Cable #RF50941-*M†	Flexlife-10, High Flex Over 10 Million Cycles		
	RK 4.4T-*/S824	PLTC PVC Grey 4x22 AWG 221 °F (105 °C), 5.2 mm OD Cable #RF50698-*M†	Tray Rated		
	RK 4.4T-*/S618	AWM PVC Grey 4x22 AWG, Foil/Drain 221 °F (105 °C), 5.2 mm OD Cable #RF50577-*M†	RFI/EMI Shielding		
	RK 4.4T-*/S618/S824	PLTC PVC Grey 4x22 AWG, Foil/Drain 221 °F (105 °C), 5.2 mm OD Cable #RF50773-*M†	RFI/EMI Shielding Tray Rate		

* Length in meters. Standard cable lengths are 2, 4, 6, 8 and 10 meters. Consult factory for other lengths.
** Standard coupling nut material is nickel plated brass "RK .."; "RKK .." indicates nylon, and "RKV .." indicates 316 stainless steel.
† For Reelfast® cable information see Connectivity Catalog.
Shield is not connected to coupling nut.

We reserve the right to make technical alterations without prior notice.

Turck Inc. | 3000 Campus Drive, Minneapolis, MN 55441 | T +1 800 544 7769 | F +1 763 553 0708 | www.turck.com

5-Pin M12 Eurofast Cordsets

- For use with Turck's Absolute Encoders
- Straight and Right Angle Female Connectors
- NEMA 1, 3, 4, 6P, and IEC IP68, IP69K



Drawing	Part Number	Cable	Features	Pinouts	
RKC .. 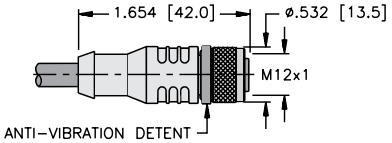	**E-RKC 4.5T-1695-*/A**	**AWM PVC Grey** **4x22 AWG 2 STP** **221 °F (105 °C)** **5.2 mm OD** **Cable #RF51695-*M†**	Turck's Analog Encoder	1. N/C 2. BN 3. WH 4. GN 5. YE	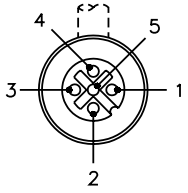
WKC .. 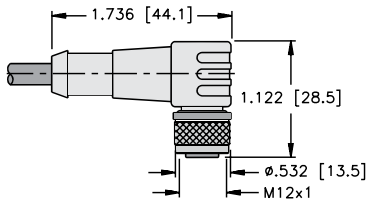	**E-WKC 4.5T-1695-*/A**				
E-RKC .. 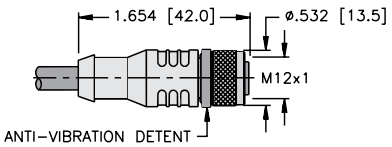	**E-RKC 4.5T-930-***	**AWM PVC Black** **5x24 AWG** **221 °F (105 °C)** **7.3 mm OD** **Cable #RF50930-*M†**	Turck's Incremental Encoder (single-ended)	1. BN 2. GY 3. WH 4. GN 5. BU	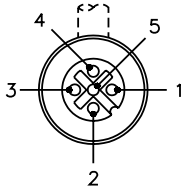

* Length in meters. Standard cable lengths are 2, 5, 10 and 15 meters. Consult factory for other lengths.
** Standard coupling nut material is nickel plated brass "E-RKC../E-WKC..; "E-RKCV../E-WKCV.. indicates 316 stainless steel.
† For Reelfast cable information see Connectivity Catalog.
Shield is not connected to coupling nut.

We reserve the right to make technical alterations without prior notice.

5-Pin M12 Eurofast Cordsets

- For use with Turck's Absolute Encoders
- Straight and Right Angle Female Connectors
- NEMA 1, 3, 4, 6P, and IEC IP68, IP69K



Drawing	Part Number	Cable	Features	Pinouts	
RKC .. 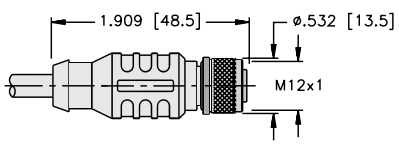	**RKC 572-*M/S3117**	**TPU Blue/Grey 4x22 AWG 2 STP 167 °F (75 °C) 7.2 mm OD Cable #RB50603-*M†**	Turck's CANbus Encoder (without CANground)	1. N/C 2. RD +V 3. BK -V 4. WH CAN_H 5. BU CAN_L	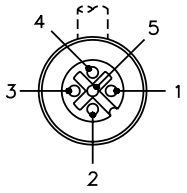
RSC .. 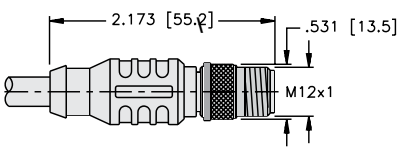	**RSC 572-*M/S3118**				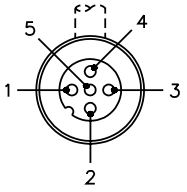
RKC .. 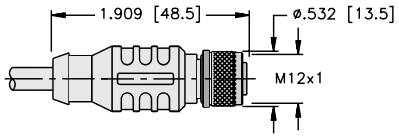	**RKC 572-*M**	**TPU Blue/Grey 4x22 AWG 2 STP 167 °F (75 °C) 7.2 mm OD Cable #RB50603-*M†**	Turck's CANbus Encoder (with CANground)	1. BARE (Drain) 2. RD +V 3. BK -V 4. WH CAN_H 5. BU CAN_L	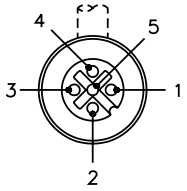
RSC .. 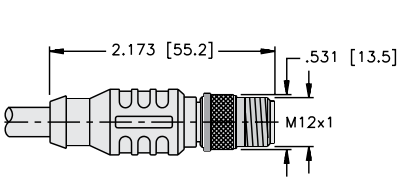	**RSC 572-*M**				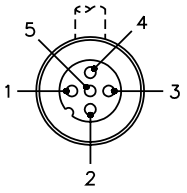

* Length in meters. Standard cable lengths are 2, 5, 10 and 15 meters. Consult factory for other lengths.
** Standard coupling nut material is nickel plated brass "E-RKC../E-WKC..; "E-RKCV../E-WKCV.. indicates 316 stainless steel.
† For Reelfast cable information see Connectivity Catalog.
Shield is not connected to coupling nut.

We reserve the right to make technical alterations without prior notice.

Turck Inc. | 3000 Campus Drive, Minneapolis, MN 55441 | T +1 800 544 7769 | F +1 763 553 0708 | www.turck.com

5-Pin M12 Eurofast D-Coded Cordsets — CANopen

- Straight Male Connector
- NEMA 1, 3, 4, 6P and IEC IP68, IP69K Protection
- 250 V, 4 A



Part Number	Cable	Features	Pinouts	
WASW 4.5T-*/S618	AWM PVC Grey 5x22 AWG 105 °C 5.7 mm OD Cable #RF50609-*M†	Turck's CANbus multiturn encoder with incremental tracks	1. BN 2. WH 3. BU 4. BK 5. GY	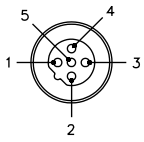

* Length in meters. Standard cable lengths are 2, 4, 6, 8 and 10 meters. Consult factory for other lengths.
** Standard coupling nut material is nickel plated brass "WASW .."; "WASKW .." indicates nylon, and "WASVW .." indicates 316 stainless steel.
† For Reelfast cable information see Connectivity Catalog.

M12 Eurofast D-Coded Cordsets Selection Matrix — Ethernet / EtherCAT

			Eurofast				
			Pin (Male)	Socket (Female)	Pin (Male)	Socket (Female)	RJ45 Plug
			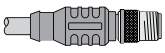 RSSW	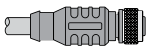 WSSW	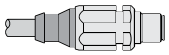 FSSDED	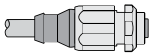 FKSDED	 RJ45S
		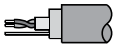 Bare	RSSD 441-*M	RKSD 441-*M	FSSDED 441-*M	FKSDED 441-*M	RJ45S 441-*M
Eurofast	Pin (Male)	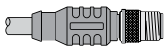 RSSD	RSSD RSSD 441-*M	RSSD RKSD 441-*M	RSSD FSSDED 441-*M	RSSD FKSDED 441-*M	RSSD RJ45S 441-*M
	Socket (Female)	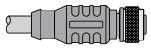 RKSD		RKSD RKSD 441-*M	RKSD FSSDED 441-*M	RKSD FKSDED 441-*M	RKSD RJ45S 441-*M
	RJ45 Plug	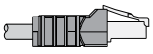 RJ45S			RJ45S FSSDED 441-*M	RJ45S FKSDED 441-*M	RJ45S RJ45S 441-*M

* Cable length in meters.
Refer to the Cordsets Builder at www.turck.com for assistance with cordset/cable combinations.
Standard cable lengths are 1, 2, 4, 5, 6, 8, 10, 15, and in +5 meter increments from there. Consult factory for other lengths.
For stainless steel coupling nuts change part number RSSD...RSSDV, FSSDED...FSSDEDV.
Shield is not connected to coupling nut.

Eurofast	Pinout	Eurofast
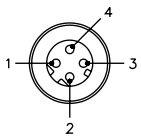 Male	1. WH / OG (+ tx) 2. WH / GR (+ rx) 3. OG (- tx) 4. GR (- rx)	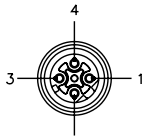 Female

RJ45 Pinout	RJ45 Plug	RJ45 (CR) Pinout
1. WH / OG 2. OG 3. WH / GR 4. N/C 5. N/C 6. GR 7. N/C 8. N/C	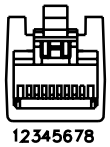 Male	1. WH / GR 2. GR 3. WH / OG 4. N/C 5. N/C 6. OG 7. N/C 8. N/C

We reserve the right to make technical alterations without prior notice.

M12 Eurofast Cordsets Selection Matrix — PROFIBUS®-DP

Eurofast		Eurofast Pin (Male) RSSW	Eurofast Pin (Male) WSSW	Eurofast Socket (Female) RKSW	Eurofast Socket (Female) WKSW
	Bare	RSSW 590-*M	WSSW 590-*M	RKSW 590-*M	WKSW 590-*M
Eurofast Pin (Male)	RSSW	RSSW RSSW 590-*M	RSSW WSSW 590-*M	RSSW RKSW 590-*M	RSSW WKSW 590-*M
Eurofast Pin (Male)	WSSW		WSSW WSSW 590-*M	WSSW RKSW 590-*M	WSSW WKSW 590-*M
Eurofast Socket (Female)	RKSW			RKSW RKSW 590-*M	RKSW WKSW 590-*M
Eurofast Socket (Female)	WKSW				WKSW WKSW 590-*M

Eurofast	590 Series Pinout	Eurofast
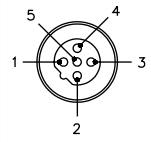 Male	1. Blue (TxD_1) 2. Green (TxD) 3. White (RxD_1) 4. Red (RxD) 5. Bare (Shield Drain Wire)	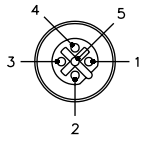 Female

M12 Eurofast D-Coded Cordsets Selection Matrix — PROFINET

Eurofast		Eurofast Pin (Male) RSSD	Eurofast Pin (Male) RKSD	Eurofast Socket (Female) FSSDED	Eurofast Socket (Female) FKSDED	RJ45S
	Bare	RSSD 42x-*M	RKSD 42x-*M	FSSDED 42x-*M	FKSDED 42x-*M	RJ45S 42x-*M
Eurofast Pin (Male)	RSSD	RSSD RSSD 42x-*M	RSSD RKSD 42x-*M	RSSD FSSDED 42x-*M	RSSD FKSDED 42x-*M	RSSD RJ45S 42x-*M
Eurofast Pin (Male)	RKSD		RKSD RKSD 42x-*M	RKSD FSSDED 42x-*M	RKSD FKSDED 42x-*M	RKSD RJ45S 42x-*M
Eurofast Socket (Female)	RJ45S			RJ45S FSSDED 42x-*M	RJ45S FKSDED 42x-*M	RJ45S RJ45S 42x-*M

* Cable length in meters.
Refer to the Cordsets Builder at www.turck.com for assistance with cordset/cable combinations.
Standard cable lengths are 1, 2, 4, 5, 6, 8, 10, 15, and in +5 meter increments from there. Consult factory for other lengths.
For stainless steel coupling nuts change part number RSSW...RSSWV.
Additional cable types available in the Fieldbus and Network I/O Catalog.
Shield is not connected to coupling nut.

Eurofast	42x Series Pinout	Eurofast
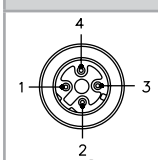 Male	1. Yellow (+tx) 2. White (+rx) 3. Orange (-tx) 4. Blue (-rx)	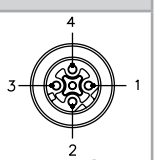 Female

RJ45 Pinout	RJ45 Plug	RJ45 (CR) Pinout
1. Yellow 2. Orange 3. White 4. N/C 5.N/C 6. Blue 7. N/C 8. N/C	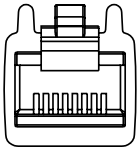	1. Yellow 2. Orange 3. White 4. N/C 5.N/C 6. Blue 7. N/C 8. N/C

We reserve the right to make technical alterations without prior notice.

Turck Inc. | 3000 Campus Drive, Minneapolis, MN 55441 | T +1 800 544 7769 | F +1 763 553 0708 | www.turck.com

Plug & Play with Standard Automotive Connectors

On request, Turck can also supply the encoders with short cables and connectors as commonly used with standard makes in the automotive sector: Deutsch, Packard, and Molex are just some examples. This makes connection on the prefabricated cable harness a simple plug & play operation with a proven connection technology.



We reserve the right to make technical alterations without prior notice.

8-Pin M12 Eurofast Cordsets

- For use with Turck's Encoders
- Straight and Right Angle Female Connectors
- NEMA 1, 3, 4, 6P, and IEC IP68, IP69K
- 60 VAC/75 VDC, 2 A



Drawing	Part Number	Cable	Features	Pinouts	
RKC .. 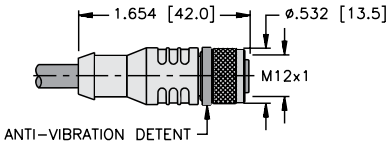	E-RKC 8T-930-*	AWM PVC Black 8x24 AWG 221 °F (105 °C) 7.3 mm OD RF50930-*M+	Incremental, Differential Mode Applications, RFI/EMI Protection	1. WH 2. BN 3. GN 4. YE 5. GY 6. PK 7. BU 8. RD	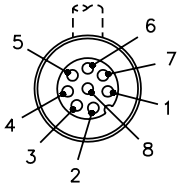
	E-WKC 8T-930-*				
	E-RKC 8T-930-*/S1115	AWM PVC Black 5x24 AWG 221 °F (105 °C) 7.3 mm OD RF50930-*M+	Incremental, Single Ended Mode Applications, RFI/EMI Protection	1. WH 2. BN 3. GN 4. N/C 5. GY 6. N/C 7. BU 8. N/C	
	E-WKC 8T-930-*/S1115				
WKC .. 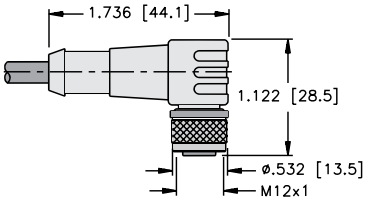	E-RKC 8T-074-*/S3012	AWM PVC Grey 3x22 AWG 221 °F (105 °C) 5.2 mm OD RF51074-*M+	Incremental, Single Ended Mode, Single Channel Applications, RFI/EMI Protection	1. BN 2. BU 3. BK 4. N/C 5. N/C 6. N/C 7. N/C 8. N/C	
	E-WKC 8T-074-*/S3012				
	E-RKC 8T-264-*	AWM PVC Black 8x24 AWG, 4 STP 221 °F (105 °C) 7.3 mm OD RF51264-*M+	Incremental, Absolute, Differential Mode Applications, RFI/EMI Protection	1. WH 2. BN 3. GN 4. YE 5. GY 6. PK 7. BU 8. RD	
	E-WKC 8T-264-*				

* Length in meters. Standard cable lengths are 2, 5, 10 and 15 meters. Consult factory for other lengths.
** Standard coupling nut material is nickel plated brass "E-RKC../E-WKC..; "E-RKCV../E-WKCV.. indicates 316 stainless steel.
† For Reelfast cable information see Connectivity Catalog.
STP Shielded twisted pair.
Shield is not connected to coupling nut.

We reserve the right to make technical alterations without prior notice.

Turck Inc. | 3000 Campus Drive, Minneapolis, MN 55441 | T +1 800 544 7769 | F +1 763 553 0708 | www.turck.com

8-Pin M12 Eurofast Cordset with LEDs

- For use with Turck's Encoders
- Right Angle Female Connector
- NEMA 1, 3, 4, 6P, and IEC IP68, IP69K
- 5-30 VDC



Drawing	Part Number	Cable	Features	Pinout	
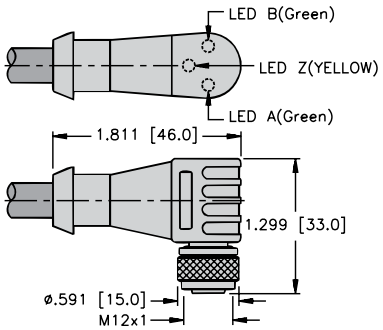	E-WKC 8T-PX3-930-*	AWM PVC Black 8x24 AWG 221°F (105 °C) 7.2 mm OD RF50930-*M†	Incremental, 3 indicator LEDs in translucent molded connector for use with Turck Incremental Encoders	1. WH 2. BN 3. GN 4. YE 5. GY 6. PK 7. BU 8. RD	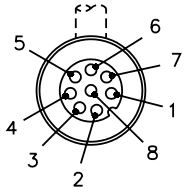
	E-WKC 8T-PX3-264-*	AWM PVC Black 8x24 AWG, 4 STP 221°F (105 °C) 7.3 mm OD RF51264-*M+	Incremental, Absolute, Differential Mode Applications, RFI/ EMI Protection	1. WH 2. BN 3. GN 4. YE 5. GY 6. PK 7. BU 8. RD	

* Length in meters. Standard cable lengths are 2, 4, 6, 8 and 10 meters.
** Standard coupling nut material is nickel plated brass "WKC..."; "WKCV.." indicates 316 stainless steel.
† For Reelfast cable information see Connectivity Catalog.
Shield is not connected to coupling nut.

Wiring Diagram

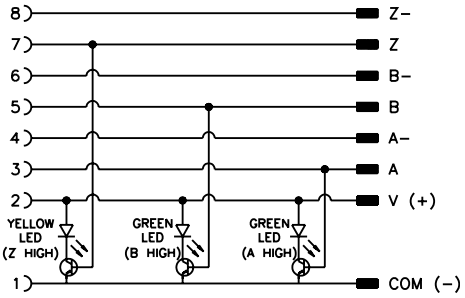

8-pin Cordset with Encoder



Note:
LEDs for indication of channels A, B and Z.
Green LEDs indicate channels A and B, while amber is used for the index channel. LEDs can also be used during machine set-up for home position indication, and provide operational status of encoder output channels.

We reserve the right to make technical alterations without prior notice.

5-Wire M12 Eurofast Field Wireable Connectors

- Screw Terminals
- No Soldering Required
- IEC IP67 Protection



Drawing	Part Number	Specifications	Application	Pinouts
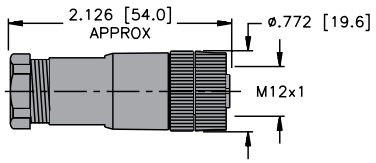	B 8151-0/PG 9	PBT, Black PG 9 cable gland, accepts 6-8 mm cable diameter. Screw terminals accepts up to 18 AWG conductors. 185 °F (85 °C) 125 V, 4 A	Mates with standard key 5-pin cordsets and receptacles	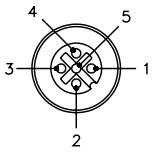
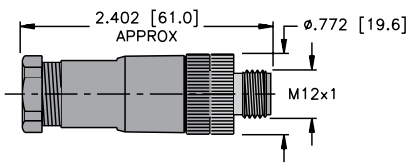	BS 8151-0/PG 9		Mates with standard key 5-pin cordsets and receptacles	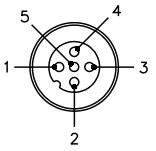

8-Wire M12 Eurofast Field Wireable Connectors, Shielded, Screw Terminals

- Screw Terminals
- No Soldering Required
- IEC IP67 Protection



Drawing	Part Number	Specifications	Application	Pinouts
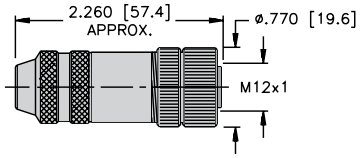	CMB 8181-0	Nickel Plated Brass PG9 cable gland accepts 6-8 mm cable diameter. Screw terminals accepts up to 18 AWG conductors. 185 °F (85 °C) 60 VAC/75 VDC, 4 A	Metal, Fully Shielded Mates with standard key 8-pin cordsets and receptacles	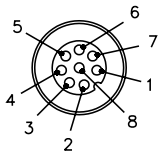
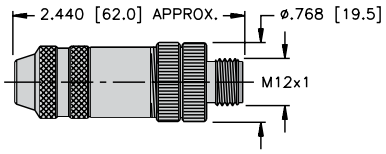	CMBS 8181-0		Metal, Fully Shielded Mates with standard key 8-pin cordsets and receptacles	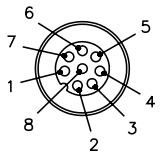

We reserve the right to make technical alterations without prior notice.

Turck Inc. | 3000 Campus Drive, Minneapolis, MN 55441 | T +1 800 544 7769 | F +1 763 553 0708 | www.turck.com

12-Pin and 17-Pin M23 Multifast Cordsets

- Female Coupling Nut, Female Contact
- Shielded, High Grade, Oil and UV Resistant, PVC



Drawing	Part Number	Specifications	Application	Pinouts	
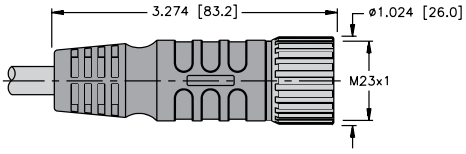	**E-CKM 12-931-***	**12x24 Black PVC 7.2 mm O.D. 26 AWG Drain, Foil and Braided Shield 221 °F (105 °C)**	12-pin Incremental	1. PK 2. RD/BU 3. BU 4. RD 5. GN 6. YE 7. N/C 8. GY 9. N/C 10. WH 11. PK/GY 12. BN	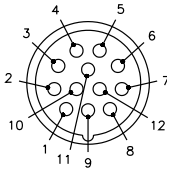
	E-CKM 12-1687-*/A	**12x26 Grey PVC 8.4 mm O.D. 28 AWG Drain, Foil and Braided Shield 176 °F (80 °C)**	12-pin Absolute	1. WH 2. BN 3. GN 4. YE 5. GY 6. PK 7. BU 8. RD 9. BK 10. VT 11. PK/GY 12. RD/BU	
	E-CKM 17-942-*	**18x24 Yellow PVC 7.6 mm O.D. 26 AWG Drain, Foil and Braided Shield 221 °F (105 °C)**	17-pin Absolute	1. WH 2. BN 3. GN 4. YE 5. GY 6. PK 7. BU 8. RD 9. BK 10. VT 11. PK/GY 12. RD/BU 13. WH/GN 14. BN/GN 15. WH/YE 16. YE/BN 17. WH/GY	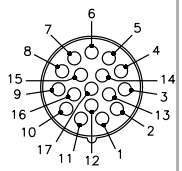

* Length in meters. Standard cable lengths are 2, 5, 10 and 15 meters. Consult factory for other lengths.
** Standard coupling nut material is nickel plated brass "E-RKC../E-WKC..; "E-RKCV../E-WKCV.. indicates 316 stainless steel.
*** Reversed from standard M23 connector.
† For Reelfast cable information see Connectivity Catalog.
Shield is not connected to coupling nut.

12-Pin and 17-Pin M23 Multifast Field Wireable Connectors, Shielded, Solder Cup

- Solder Cup
- IEC IP65 Protection



Drawing	Part Number	Specifications	Application	Pinout
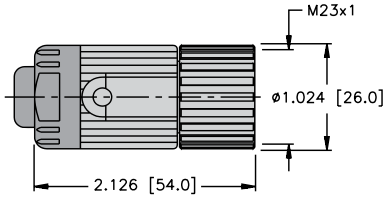	**E-CKS 12-0**	**Solder Cup up to 18 AWG**	Metal, fully shielded Mates with 12-pin encoders	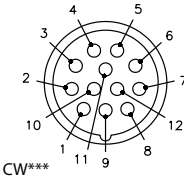
	E-CKS 17-0	**Solder Cup up to 17 AWG**	Metal, fully shielded Mates with 17-pin encoders	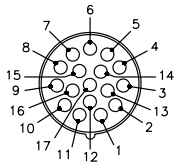
	CSS 17-0	**Solder Cup Up to 17 AWG**	Metal, fully shielded For custom extension cables	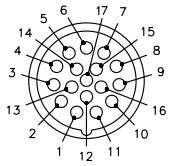

*** Reversed from standard M23 connector.

We reserve the right to make technical alterations without prior notice.

Military Cordsets

- 7 and 10-pin
- Shielded, High Grade, Oil and UV Resistant, PVC



Drawing	Part Number	Specifications	Application	Pinouts	
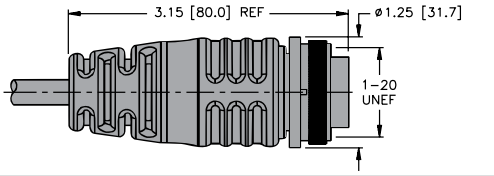	E-MK 7-930-*	**24 AWG, Black PVC 7.3 mm O.D. 26 AWG Drain Foil & Braided Shield, 221 °F (105 °C)**	7-pin, Threaded Mates with 7-pin encoder	A. WH B. BN C. GN D. YE E. GY F. PK G. BU	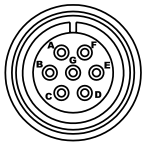
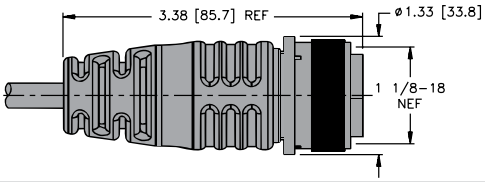	E-MK 10-931-*	**24 AWG, Black PVC 7.2 mm O.D. 26 AWG Drain Foil & Braided Shield 221 °F (105 °C)**	10-pin, Threaded Mates with 10-pin encoder	A. GN F. WH B. GY G. YE C. BU H. PK D. BN I. RD E. BK J. Drain	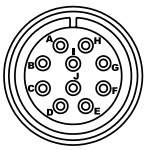

* Cable length in meters.
*** Reversed.
Shield is not connected to coupling nut.

Military Field Wireable Connectors

- 6, 7 and 10-pin
- Threaded and Bayonet Styles



Drawing	Part Number	Specifications	Application	Pinouts
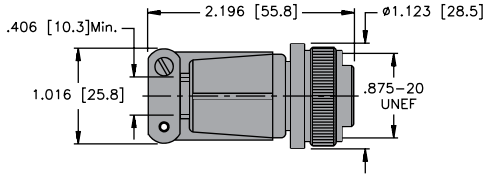	E-MK 6-0	**Solder cup connection**	6-pin, Threaded Mates with 6-pin encoder	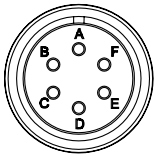
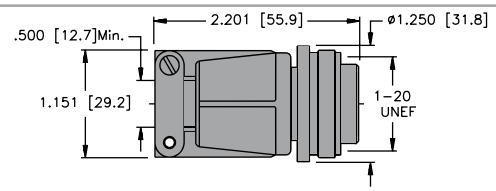	E-MK 7-0		7-pin, Threaded Mates with 7-pin encoder	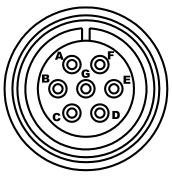
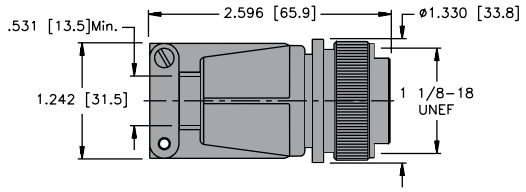	E-MK 10-0		10-pin, Threaded Mates with 10-pin encoder	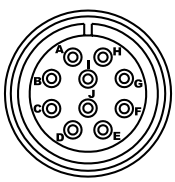

We reserve the right to make technical alterations without prior notice.

Turck Inc. | 3000 Campus Drive, Minneapolis, MN 55441 | T +1 800 544 7769 | F +1 763 553 0708 | www.turck.com

GENERAL INFORMATION

SERIES	TYPE	PAGE
Rotary Measurement Technology	Overview	**I2**
	Encoders	**I5**
	Incremental	**I9**
	Absolute	**I17**
Linear Measurement Technology	Overview	**I24**
IP Protection Class		**I25**

We reserve the right to make technical alterations without prior notice.

Rotary Measurement Technology

Introduction:

Encoders may be used in applications where length, position, speed or an angular position is measured. They transform mechanical movements into electrical signals, and can be divided into incremental and absolute measuring systems.

Incremental encoders generate pulses, where the number of pulses can be a measure of speed, length or position. In absolute encoders, every position corresponds to a unique code pattern, so that the actual position is recognized.

Turck can supply all encoders, whether its a solid shaft or hollow shaft version. Using a hollow shaft encoder saves up to 30% of costs and up to 50% of the required space, compared to a shaft encoder. This is achieved by avoiding additional couplings, brackets and other assembly aids.

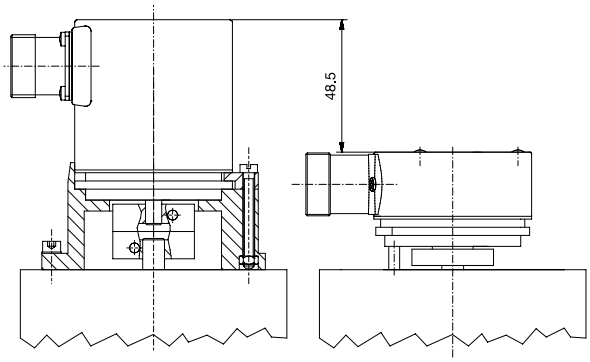

Application Examples:

Positioning

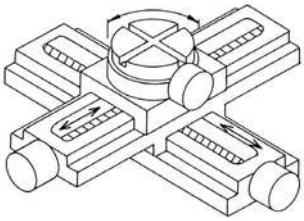

Length Measurement

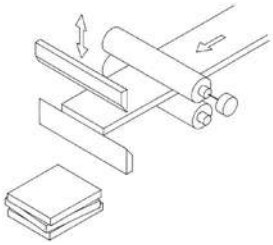

Detecting a Fork's Position

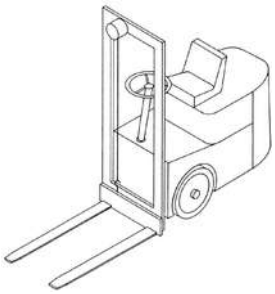

Detecting Position

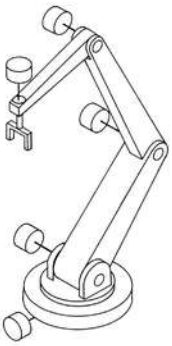

Angular Measurement

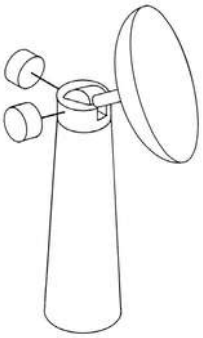

Velocity Measurement
e.g., in drive engineering (geared motors)

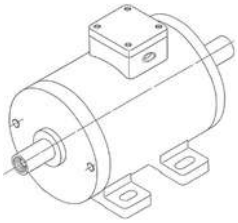

We reserve the right to make technical alterations without prior notice.

Turck Inc. | 3000 Campus Drive, Minneapolis, MN 55441 | T +1 800 544 7769 | F +1 763 553 0708 | www.turck.com

Rotary Measurement Technology

Approvals:

Most Turck products carry UL (Underwriters Laboratories Inc.) approvals. Turck products comply with RoHS standards.

Aging Compensation:

LEDs inevitably lose power over a period of time. As a result, the output signal degrades. The phase shift between channel A and B of 90° also degrades, and the direction of rotation may no longer be detected. A special electronic circuit built into the Turck specific ASIC prevents this effect.

Signals of a new encoder or encoders with aging compensation:

Signals of an older encoder without aging compensation:

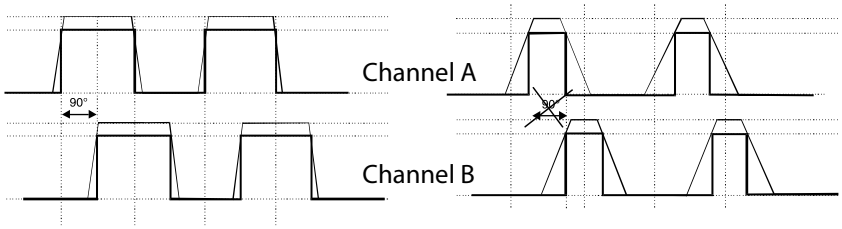

Benefit: The aging compensation circuit ensures the same signal, even after many years of operating time. Machine downtime is reduced dramatically, while reliability is increased.

Temperature Compensation:

This specialized circuit ensures that the quality of the signal will stay on the same high level over the whole working temperature range.

Benefit: The positioning accuracy of a machine will not be affected by temperature changes.

Current Consumption:

The values for current consumption in this catalog apply for ambient temperature (23 °C). Because of the temperature compensation, the current consumption of the encoder rises with the temperature. This increase in current is taken into consideration when giving the figure for maximum current consumption. The output currents are dependent on the user's input circuit and are therefore not included in the figures given; these should be calculated and added in.

Short-Circuit Protection:

The outputs of all the encoders are short-circuit protected, provided that the supply voltage is correctly wired. If an output is connected by mistake to 0 V or +Ub or with another output, the device will not be damaged. As soon as the error is corrected, the encoder is ready for use again.

Benefit: Wiring circuit errors during installation that often occur in the hectic day-to-day industrial environments do not lead to the encoder being permanently damaged.

Environmental Conditions:

A significant influence on the lifetime of the encoder is set by the environment in which the encoder is operating. For example, the ambient temperature, expected shaft load, and possible grade of dust/dirt and humidity/liquids. The support design and the use of high quality components makes our encoders suitable for applications in rough conditions. Many references from customers including Bosch, Siemens, and Bombardier are proof of this high quality.

We reserve the right to make technical alterations without prior notice.

Rotary Measurement Technology

Temperature:
Definition according to
DIN standards 32 878

Working Temperature: Is defined as the environmental temperature in which the encoder will produce the signals defined in the data sheets.

Operating Temperature: Is defined as the environmental temperature that the encoder can withstand without getting damaged.

Dirt/Dust and Humidity/Water:

An ingress protection (IP) classification according to EN 60529 describes how the encoder is protected against particles and water. The first digit following IP defines the size of the particles. The higher the number, the smaller the particles. The second digit defines the resistance against water. The higher the number, the higher the water pressure can be. Turck encoders have a protection up to IP67.

Protection Against Particles (first digit):

0	Not protected
1	Protected against particles 50 mm and larger
2	Protected against particles 12.5 mm and larger
3	Protected against particles 2.5 mm and larger
4	Protected against particles 1.0 mm and larger
5	Protected against dust
6	Dust proof

IP69k acc. to DIN 40050 Part 9: protected against high-pressure water/steam jet cleaning

Protection Against Particles (second digit):

0	Not protected
1	Protected against vertically falling drops of water
2	Protected against falling drops of water up to 15° from vertical
3	Protected against water sprayed up to 60° from vertical
4	Protected against water sprayed from all directions, limited ingress permitted
5	Protected against low pressure jets from all directions, limited ingress permitted
6	Protected against strong jets of water (e.g., for use on ship decks), limited ingress permitted
7	Protection against the affects of immersion between 15 cm and 1 m
8	Protected against long periods of immersion under pressure

Designation of Colors:
to DIN standard 757

Abbreviation	Color
BK	black
BN	brown
RD	red
OG	orange
YE	yellow
GN	green
BU	blue

Abbreviation	Color
VT	violet
GY	gray
WH	white
PK	pink
GD	gold
TQ	turquoise
SR	silver

Bearing-Lock:

Bearing-Lock: The proven Bearing-Lock construction with an additionally mechanical protected shaft seal.


Bearing-Lock

We reserve the right to make technical alterations without prior notice.

Rotary Measurement Technology - Encoders

Installing Encoders:

Encoder shafts and bearings are subjected to loads for a variety of reasons:

- Installation tolerances when mounting the encoders (radial and angular displacement)
- Thermal changes (e.g., linear expansion of the drive shaft)
- Effects of wear (e.g., radial runout of the drive shaft or vibrations)

These load factors have a direct effect on the life expectancy of the shaft bearings and on the quality of the signal. For this reason, Turck provides a wide variety of accessories that should be used to compensate for these forces. For encoders with a solid shaft, this is generally done by using shaft couplings between the drive shaft and the encoder shaft. The solution with hollow shaft encoders is to use flex couplings, fixing brackets, or torque stops between the encoder bracket and the mounting surface. Not using a coupling generally leads to unacceptably high loads on the bearings; the ensuing wear will cause the encoder to fail prematurely.

In order to avoid permanent damage of the encoder, certain bearing loads should not be exceeded. If hollow shaft encoders are correctly installed and the torque stops or flex couplings that are available from Turck are used, then no problems will occur. For solid shaft encoders, the maximum permitted axial and radial loads are shown in the appropriate technical data.

Mounting Examples for Hollow Shaft Encoders:

Mounting a hollow shaft encoder with torque stop and pin is easiest and fastest. Standard hollow shaft encoders are equipped with the torque stop.

Application: If axial play is less than 0.5 mm and a resolution of up to 2500 ppr (if no pulse doubling is used).

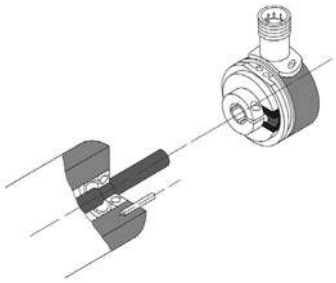

Mounting of a hollow shaft encoder with extended torque stop and long pin.

Application: Especially recommended if there is a large axial play. Due to the larger mounting radius of the pin, the resolution can be higher (up to 3600 ppr, if no pulse doubling is used).

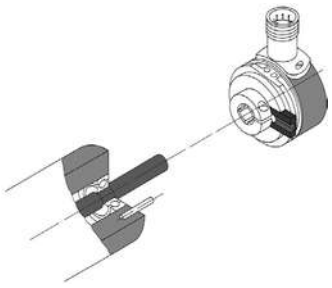

Mounting of a hollow shaft encoder with a flex coupling.

Application: For higher resolution or if no pin can be used due to mechanical restrictions. No restrictions on resolution.

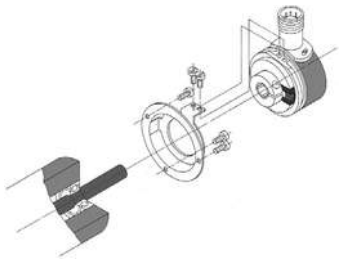

We reserve the right to make technical alterations without prior notice.

Rotary Measurement Technology - Encoders

Mounting Examples for Shaft Encoders with Servo Bracket:

Mounting with fastening eccentrics and coupling (to reduce shaft overload).

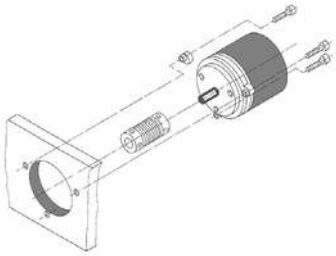

Mounting with assembly bell, fastening eccentrics and coupling (to prevent shaft overload and to insulate the encoder thermally and electrically).

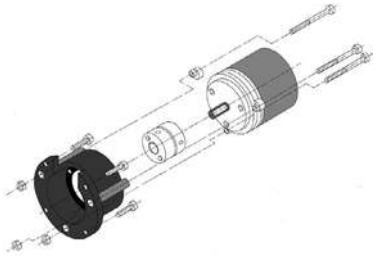

Mounting Examples for Shaft Encoders with Clamping Bracket:

Mounting with an angular bracket and coupling (to reduce shaft overload).

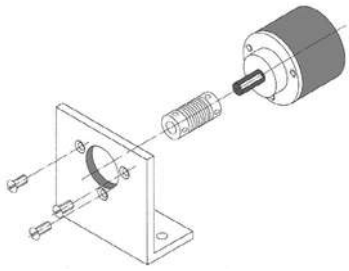

Mounting with a commonly used clamping device and coupling (to reduce shaft overload).

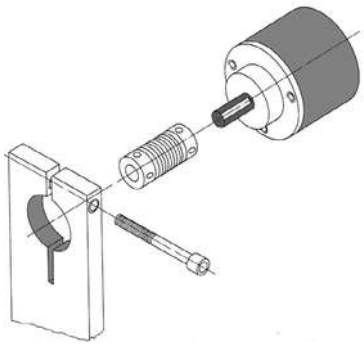

We reserve the right to make technical alterations without prior notice.

Turck Inc. | 3000 Campus Drive, Minneapolis, MN 55441 | T +1 800 544 7769 | F +1 763 553 0708 | www.turck.com

Rotary Measurement Technology - Encoders

Loading of Encoder Shaft Bearings Using Coupling Forces:

With all spring couplings (shaft coupling, flex coupling, fixing bracket), alignment and axial errors are converted to a force that corresponds to the spring constant of the coupling. This force has to be absorbed by the encoder shaft bearings. When installing an encoder, this should be done with as little force as possible; i.e., without any unnecessary initial tension on the coupling. If this is adhered to, adequate tolerance compensation is guaranteed for the whole service life of the encoder bearings.

This force does not occur with torque stops for hollow shaft encoders, where the encoder is prevented from turning by means of a pin or rod. Although the encoder is prevented from rotating due to a rigid interlock, the encoder is still free to move in any other direction. This is dependent on it being mounted in such a way that it has freedom to move radially and axially (thermal linear expansion of the drive shaft).

Possible Errors in Accuracy Due to Couplings:

1. Deviations in accuracy caused by torsion of a spring coupling (in particular shaft couplings)

This deviation in accuracy is defined by the torque to be transmitted (bearing friction and mass moment of inertia) and by the torsional spring constant of the torque stop.

The following applies:

$$\text{Max. error (degree)} = \frac{\text{max. torque [Ncm]}}{\text{torsional spring constant [Ncm/degree]}}$$

The following table serves to estimate the ratio between such an error and the smallest increment of an encoder:

Relationship between the resolution of an encoder in bit and the smallest increment in angular degrees:

Resolution	binary	10 bit	11 bit	12 bit	13 bit	14 bit	17 bit
	ppr	1024	2048	4096	8192	16384	131072
Increment	degrees	0.352	0.176	0.088	0.044	0.022	0.0028
	degrees:min:sec	0:21:06	0:10:33	0:05:16	0:02:38	0:01:19	0:00:10
	sec	1266	633	316	158	79	010

2. Deviations in accuracy caused by radial play in the drive shaft with asymmetrical mounting of the couplings

Here, one has to differentiate between couplings that are mounted in an axially symmetrical manner around the shaft (all shaft couplings, many flex couplings) and asymmetrically mounted couplings (many flex couplings, all mounting brackets and pin-based torque stops).

With asymmetrical couplings, deviations in accuracy can arise due to radial movements of the drive shaft (radial runout/play). These deviations are dependent on the amount of the radial play and the distance of the torque stop locating point from the drive shaft.

We reserve the right to make technical alterations without prior notice.

Rotary Measurement Technology - Encoders

Maximum permissible radial runout to achieve an accuracy >1/2 LSB when using an asymmetrical 1 point torque stop:

The relationship is shown in the following diagram:

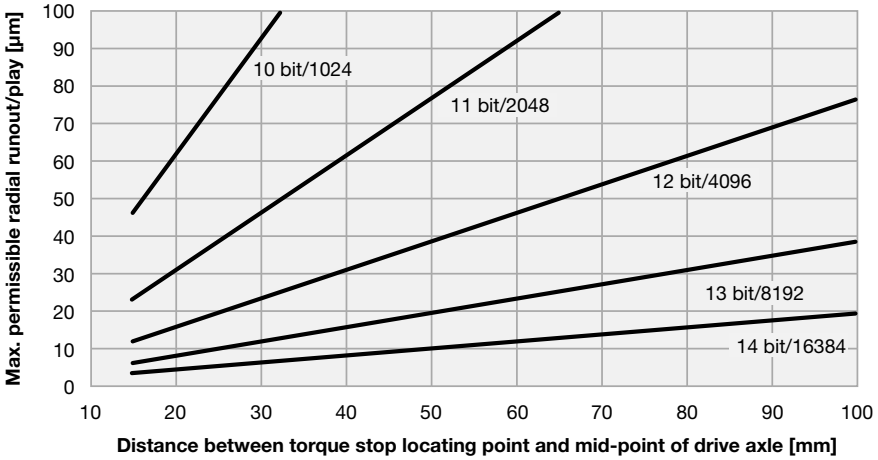

Particular Shaft Loading Due to Toothed-Wheels, Gear-Pulleys and Similar Elements:

Measuring wheels, toothed wheels or gear pulleys, which are mounted directly on the encoder shaft, exert radial forces on the latter, dependent on pre-stressing and angular acceleration. Turck encoders are designed to absorb these forces to a great extent. The maximum permissible load capacity of the shaft is shown in the technical data for the encoder. If these load values are exceeded, the encoder shaft must be isolated from the radial load by selecting an appropriate shaft with its own bearings that can absorb the forces. Turck offers suitable bearing blocks and bearing boxes for this purpose (please refer to the page G1, Accessories in this catalog).

We reserve the right to make technical alterations without prior notice.

Turck Inc. | 3000 Campus Drive, Minneapolis, MN 55441 | T +1 800 544 7769 | F +1 763 553 0708 | www.turck.com

Rotary Measurement Technology - Incremental Encoders

Incremental Encoders Assembly and Function:

Optical Scanning
The optical encoder operates on the Moiré Fringe principal of optics. Light from the LED passes through the code disk, the mask, and onto the photo receiver. The photo receiver outputs a sine wave which corresponds to the flashing light pulses from the LED. The sine wave is then converted to a square wave by the receiver circuitry.

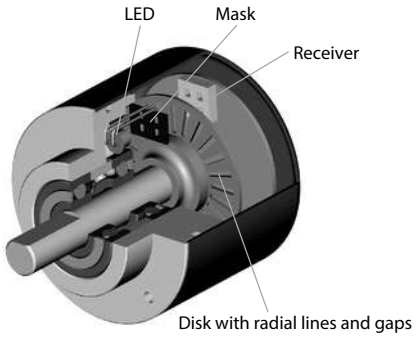

Magnetic Scanning
In addition to optical encoders, Turck offers encoders that use magnetic technology to create a robust incremental encoder. The magnetic field of the permanent magnet is rotated over the magnetic ASIC sensor that a covert the changing magnetic fields into incremental encoder signals.

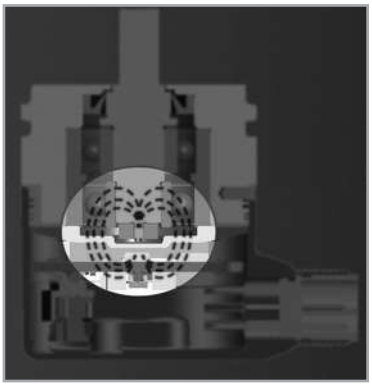

Incremental

Mechanical Advantages of Turck Encoders:

Sturdy bearing construction: "Bearing-Lock design"
- Interlocked bearings, large bearing span and strong outer bearings ensure stability when subjected to vibration.
- Ideal for outdoor use thanks to its solid die-cast housing and radial shaft seal, as well as IP67 protection rating and a temperature range from -40 to 185 °F (-40 to 85 °C).

Processing of the Signals:

The sine wave signals are processed in an electronic circuitry, usually a Turck specific ASIC. This is necessary because most controllers require digital signals with a certain voltage level. Signals are pre-processed in the encoder by the output circuit depending on the application.

Selecting an Incremental Encoder:

When selecting a suitable incremental encoder, refer to the general selection criteria shown on page G1, Accessories.

Multiplication of Pulses:

The resolution of a two channel encoder can be multiplied by two or four using special edge detecting.

An encoder with physically 5,000 pulses per revolution can generate 20,000 pulses per revolution using this technique.

We reserve the right to make technical alterations without prior notice.

Rotary Measurement Technology - Incremental Encoders

Inverted Signals:

When used in environments with high electrical noise and/or very long cable distances, it is recommended to use encoders with inverted (complementary) signals. These signals are available with RS422 and sine wave outputs. Turck also offers push-pull outputs.

Number of Channels:

Encoders with one output channel:
Encoders with one output channel are used where no direction sensing is needed (e.g., speed control or length measuring).

Encoders with two output channel:
Applications to sense the direction of a rotation require encoders with two channels (A and B) being shifted 90° out of phase. By detecting the phase shift, the direction can be located.

- Shaft turning clockwise, top-view of shaft
- Inverted signals available
- 0-pulse is linked with channel A and B; tr = rise time, tf = fall time

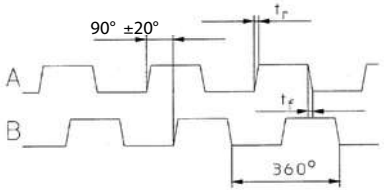

Single ended connection:

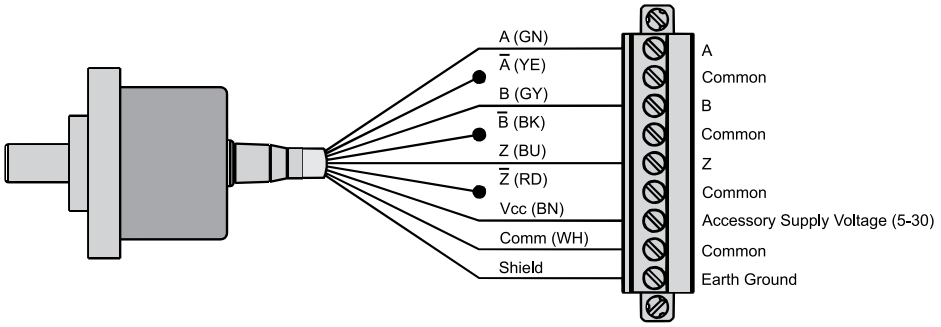

Complements (A not, B not, Z not) should never be tied to common or to each other. The unused wires should be tied back and insulated to prevent them from touching Vcc, common or any other signal wires or driver damage can occur.

We reserve the right to make technical alterations without prior notice.

Turck Inc. | 3000 Campus Drive, Minneapolis, MN 55441 | T +1 800 544 7769 | F +1 763 553 0708 | www.turck.com

Rotary Measurement Technology - Incremental Encoders

Number of Channels:

Encoders with three output channels:
In addition to two channels, a zero signal that appears once per turn is also available. This can be used as a reference signal during the first revolution after power up.

- Shaft turning clockwise, top-view of shaft
- Inverted signals available
- 0-pulse is linked to AND with channel A and B; tr = rise time, tf = fall time

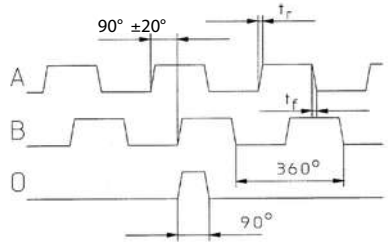

Differential Wiring:

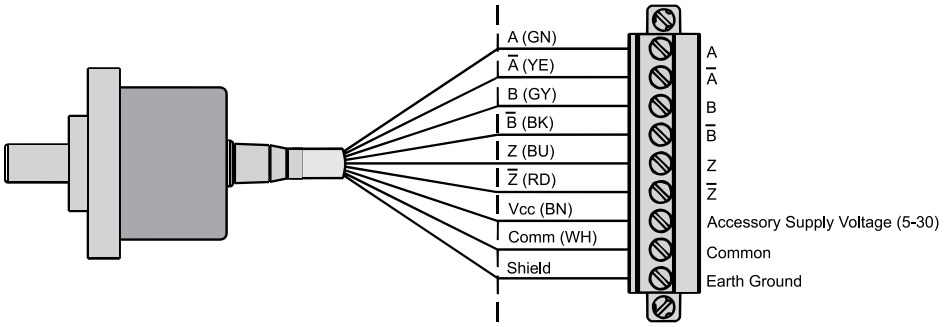

For general industrial environments where there are no large motor or drives present, the standard M12 Eurofast® cordset with non-twisted pair conductors will suffice. In heavy industrial environments, or when used on AC vector motors, M12 Eurofast cordsets with twisted pairs should be used.

Resolution - Measuring Wheel:

An encoder is equipped with a measuring wheel. Every revolution corresponds to a distance of 200 mm (circumference). The accuracy should be 0.1 mm. What is the required resolution (ppr)?

Given:
Circumference of the measuring wheel:
U = 200 [mm]

Accuracy of the system:
G = 0.1 [mm]

Wanted: Resolution of the encoder:
A = ? [pulses/revolution]

$$\text{resolution} = \frac{\text{circumference}}{\text{accuracy}} = \frac{U}{G}$$

Sensor Outputs:

The sensor outputs are used if the distance from the encoder to the control unit is very long and the voltage supply at the encoder could drop due to this long distance.

The input impedance of the sensor inputs (Controller) is very high, and the voltage drop on the sensor output line is almost zero. Due to this, it is possible to detect the actual supply voltage of the encoder (e.g., 4.2 V instead of 5 V). Based on this information, the controller will increase the voltage supply to, for example, 5.8 V. This feature is generally available on selected 5000, 5800 and A02H encoder models. Please refer to the selection guides for more information on this feature.

We reserve the right to make technical alterations without prior notice.

Rotary Measurement Technology - Incremental Encoders

Pulse Frequency:

The required pulse frequency can be calculated based on the number of pulses per revolution (ppr) and the speed (rpm). The maximum pulse frequency is listed for each encoder. The pulse frequency can be from 300 kHz to 800 kHz.

Example:
How to calculate the required pulse frequency f_{max}:

Given: speed
n = 3000 RPM
Resolution of the encoder
R = 1000 ppr

$$f_{max} = \frac{n \times R}{60}$$

The required pulse frequency is 50 kHz. Now you can compare this result with the data of the encoder you would like to choose.

This diagram can be used as a quick guide for the most common resolutions:

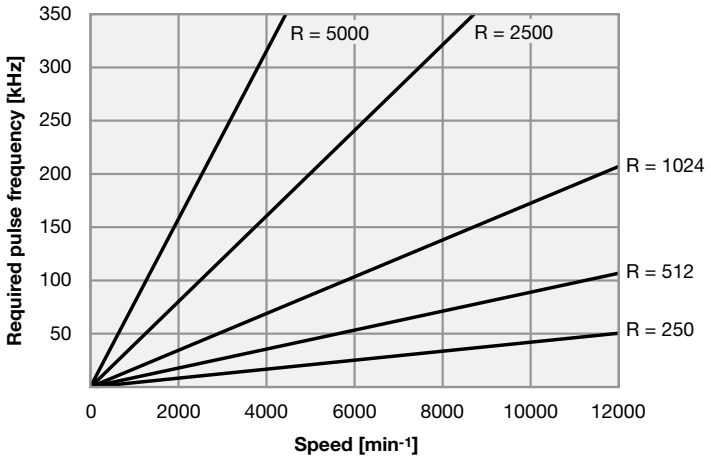

Outputs and Voltage Supplies (overview):

Turck offers a wide range of possible outputs and voltage supplies for any application:

Output	Inverted Signals	Voltage Supply
RS422	Yes	5 VDC
RS422	Yes	10-30 VDC or 5-30 VDC
Push pull output	No	10-30 VDC or 5-30 VDC
Push pull output	Yes	10-30 VDC or 5-30 VDC
Push pull (7272)	Yes	5-30 VDC
Sine wave voltage output	Yes	5 VDC
Sine wave voltage output	Yes	10-30 VDC

If the encoder is used in an environment with high electrical noise and long cables, it is recommended to use inverted signals.

We reserve the right to make technical alterations without prior notice.

Turck Inc. | 3000 Campus Drive, Minneapolis, MN 55441 | T +1 800 544 7769 | F +1 763 553 0708 | www.turck.com

Rotary Measurement Technology - Incremental Encoders

Digital Outputs:

The sine wave signal from the optical system is first digitized to have square wave signals available.

- Shaft turning clockwise, top view of shaft
- Inverted signals are available
- 0-pulse is linked to channel A and B

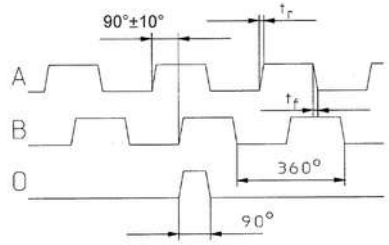

There are two possible outputs available to transmit the signals, RS422 (TTL compatible) or push-pull (PNP or NPN). When choosing the suitable output for the application, the following points have to be considered:

- The corresponding unit / controller the encoder will be connected to
- The distance from the encoder to the receiver unit
- The sensitivity against electrical noise or other interference

Available Output Drivers:

The IC-DL is a fast line driver with six independent channels and ideal for 10-30 VDC control circuits. It can transmit a push pull signal with inverted signals up to 250 meters. An IC-DL encoder can be used as a differential line driver, a sinking output or a sourcing output. The push-pull output stages have been designed to cope with a high driver power of typically 100 mA at 30 VDC and are compatible with TIA/EIA RS-422 standard. The outputs are current-limited and short-circuit-proof. The output channels can be shorted and are protected by a thermal overload circuit that detects the short and reactivates the output when the short circuit is removed.

The 7272 output driver is capable of transmitting digital encoder signals to 30 meters, and allows interfacing to drives, PLCs, discrete counters, etc. Depending on its physical connection to a device, this driver can be used as a differential line driver, a sinking output, or a sourcing output. This driver can provide voltage levels equal to the encoders supply voltage (up to 30 V), and can sink or source 40 mA of current. This device is also referred to as a push-pull driver. The outputs are short circuit protected by utilization of internal current limiting and thermal shutdown during overload. Caution: only one channel can be shorted at a time.

The 7272 is a replacement for the following IC's: 4469, 88C30, 8830, and 26LS31. The 7272 will also replace open collector outputs with internal pull up resistors.

The 26C31is an output driver capable of transmitting digital encoder signals to 100 meters, and allows interfacing to drives, PLC, discrete counters, etc. Depending on its physical connection to a device, this driver can be used as a differential line driver, a sinking output or a sourcing output. This driver can provide voltage levels to 3.5 V (TTL Level), and can sink or source 20 mA of current. This device is also referred to as a push-pull driver. The outputs are short circuit protected by utilization of internal current limiting and thermal shutdown during overload. The 26C31is a replacement for the 26LS31 and will also replace open collector outputs with internal pull up resistors

The 7273 IC is an open collector driver manufactured by Texas Instruments. This device should be used for short transmission distance (up to 5 meters) and in environments with little or no electrical interference. This driver acts like a switch sinking current to ground. Maximum sinking capability is 20 mA maximum and the maximum voltage applied to the output is 30 VDC. This output is very common for interfacing to discrete counters. This output is equal to: 3904, 7406, 3302, 681, 689.

We reserve the right to make technical alterations without prior notice.

Rotary Measurement Technology - Incremental Encoders

RS422:
Output Circuit and Recommended Input Circuit

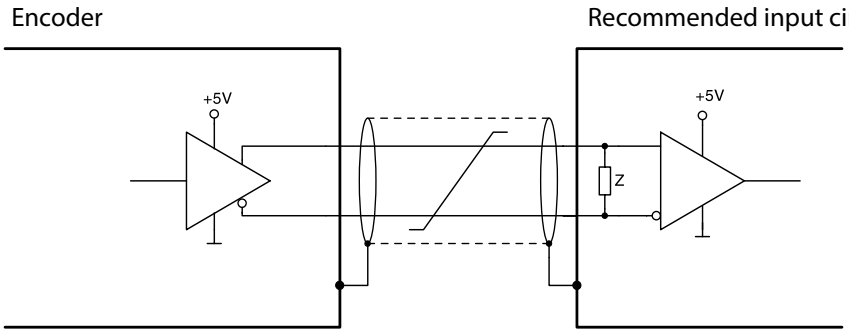

Push-Pull Outputs:

Push-pull outputs are suitable for count interface cards, electronic counters or PLC inputs. They are available in **two versions:**

Push-pull:
- Push-pull with integrated wave impedance adjustment, recommended cable impedance 40-150 Ω
- Recommended for long cable lengths, high pulse frequencies and output voltages up to 30 V
- With or without inverted (complementary) signals

Push-pull (7272):
- Universal line driver 5-30 V with low-level (max 0.5 V)
- Recommended for cable lengths up to 30 m
- With inverted signals

Output Circuit and Recommended Input Circuit Push-Pull with Inverted Signals:

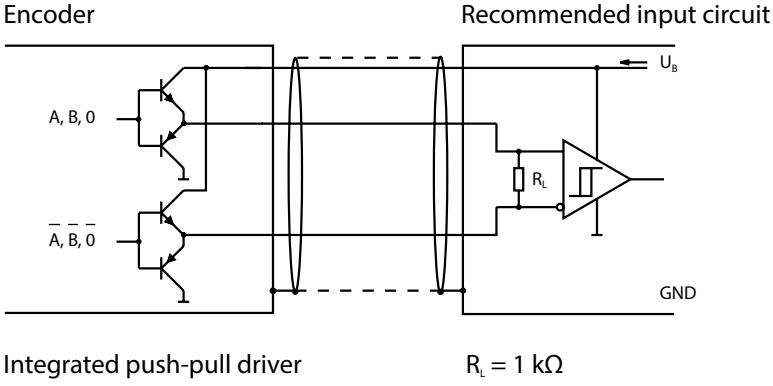

We reserve the right to make technical alterations without prior notice.

Turck Inc. | 3000 Campus Drive, Minneapolis, MN 55441 | T +1 800 544 7769 | F +1 763 553 0708 | www.turck.com

Rotary Measurement Technology - Incremental Encoders

Output Circuit and Recommended Input Circuit Push-Pull Without Inverted Signals:

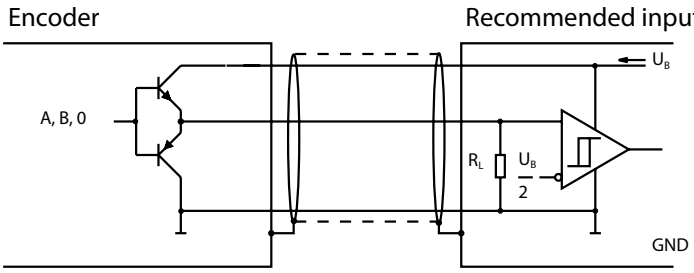

Integrated push-pull driver

R_L = 1 kΩ

Sine Wave Outputs:

The sine wave signals are available as voltage signals. They can be further processed and multiplied by a factor of 10, 20, 50, 100, 400, 500, 1000 res. binary factors (512, 1024). Due to the interpolation of the two signals, which are 90° out of phase, a very high resolution can be achieved.

This makes these signals useful for applications where very high resolutions are required. Further they are very suitable for digital drives with a very slow and precise movement (e.g., for grinding machines or lifts and elevators).

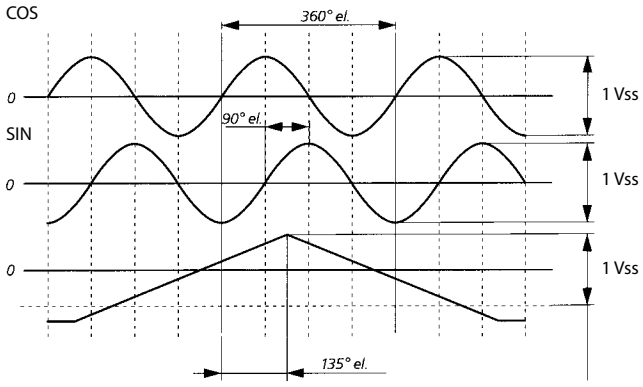

- Shaft turning clockwise, top view of shaft
- 0-pulse is generated once per turn

Output Circuit and Recommended Input Circuit for Sine Wave Voltage Signals:

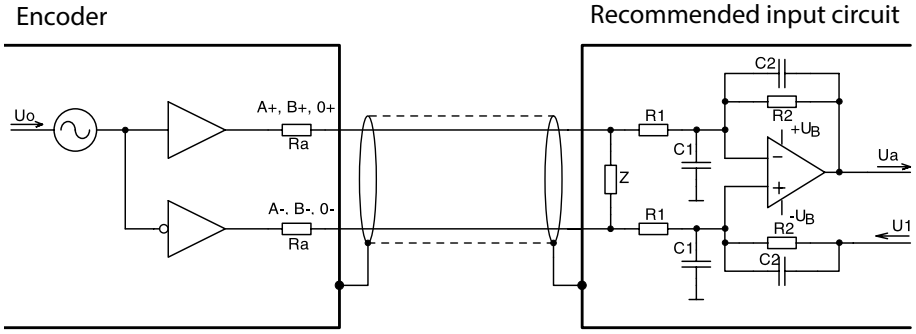

R_a = 10 Ω
C_1 = 150 pF
C_2 = 10 pF
R_1 = 10 kΩ
R_2 = 33 kΩ
U_0 = 2.5 V ±0.5 V

Z = 120 Ω
U_1 = U0

OPV: e.g., MC33074

We reserve the right to make technical alterations without prior notice.

Rotary Measurement Technology - Incremental Encoders

How Devices Interpret Encoder Signals:

PLC counter cards, discrete counters, and drives require two distinct voltage level states to trigger the input's logic state. The voltage "threshold" levels are defined by each manufacturer and will be included in their operation manuals. The lower voltage level is defined as logic "0" and the higher voltage level is defined as logic "1". The encoders square wave output toggles from logic "0" to logic "1". The PPR (pulses per revolutions) of the encoder defines how many times this will occur per revolution of the encoder, while the encoders output driver determines the voltage threshold levels. The physical communication line between the encoder and these devices will be either single ended or differential. Therefore, it is critical to take care when selecting the encoder's output driver.

Typical Device Voltage Level Triggering Requirements:

	Logic Level "0"	Logic Level "1"
TTL Level	0 V to 0.5 V	2.8 V to 5 V
HTL Level	0 V to 4 V	10 V to 24 V

Cable Lengths for Incremental Encoders:

Depending on the output circuit and the electrical noise, the following cable lengths are recommended.

Output circuit:	Max. cable length:	Encoder connected to:
Push-pull without inverted signals	328 ft (100 m*)	Counter/PLC
Push-pull with inverted signals	820 ft (250 m*)	PLC/IPC [1)]
Push-pull with inverted signals (7272)	98 ft (30 m)	
RS422 with inverted signals	Up to 3280 ft (1000 m) (> 164 ft (> 50 m)*)	PLC/IPC [1)]
Voltage sine with inverted signals	164 ft (50 m)	PLC/IPC [1)]

[1)] IPC = industrial PC
* depends on frequency

Annotations:

- Depending on the application the recommended cable length can be shorter, especially in areas with strong electrical noise.
- Always use shielded cables
- The core diameter of the signal cores should be ≥ 0.14 mm² (26 AWG)
- The core diameter of the voltage supply cores should be large enough, depending on the cable length, that the voltage supply of the encoder is high enough and the signals do not go below the minimum levels! We strictly recommend the use of the cable types written down in the accessories.

We reserve the right to make technical alterations without prior notice.

Turck Inc. | 3000 Campus Drive, Minneapolis, MN 55441 | T +1 800 544 7769 | F +1 763 553 0708 | www.turck.com

Rotary Measurement Technology - Absolute Encoders

Design and Function:

Absolute encoders have a disk with a digital coding on concentric tracks. This code is read by a Turck Opto-Asic. A unique bit pattern is assigned to each position.

In the event of a power failure, true position verification is available as soon as power is up again, even if the shaft was rotated while the encoder was powered off. Also, no reference drives after starting-up are necessary, as with incremental systems. Thus, safety is increased and the time taken for reference drives is saved.

Absolute

Mechanical Advantages of Turck Encoders:

Sturdy bearing construction: "Bearing-Lock design"

- Interlocked bearings, large bearing span and strong outer bearings ensure stability when subjected to vibration.
- Ideal for outdoor use thanks to its solid die-cast housing and radial shaft seal, as well as IP67 protection rating and a temperature range from -40 to +185 °F (-40 to +85 °C).

Selecting an Absolute Encoder:

When selecting an absolute encoder, the following parameters should be considered in addition to the recommendations on page B1: supply voltage, type of code and interface (SSI, parallel, fieldbus, 4-20 mA)

Versions:

Singleturn encoders: Depending on the number of divisions, they generate up to 131,072 (17 Bit) unique positions per turn. This corresponds to an angular resolution of 0.0028 (= 0.168'). After one revolution the process re-starts.

Singleturn encoders can be used in applications where revolution is sufficient (e.g., measurement of angles, robotics).

Multiturn encoders: Available with up to 131,072 (17 Bit) definite angular positions per revolution in addition to 16,777,216 (24 Bit) definite revolutions. This corresponds to 2.19 trillion (41 Bit) definite positions.

Multiturn encoders can be used for positioning applications (e.g., automatic storage, retired systems, lift elevators, cranes, and machine tools).

Output Codes:

Decimal	Binary	Gray	BCD
0	0000	0000	0000 0000
1	0001	0001	0000 0001
2	0010	0011	0000 0010
3	0011	0010	0000 0011
4	0100	0110	0000 0100
5	0101	0111	0000 0101
6	0110	0101	0000 0110

Decimal	Binary	Gray	BCD
7	0111	0100	0000 0111
8	1000	1100	0000 1000
9	1001	1101	0000 1001
10	1010	1111	0001 0000
11	1011	1110	0001 0001
12	1100	1010	0001 0010

We reserve the right to make technical alterations without prior notice.

Rotary Measurement Technology - Absolute Encoders

Code Types

Binary Code:

Binary Code can be processed very simply by computer systems. Gray code inside the encoder is converted via the ASIC to binary code. Binary codes have more than one bit transition for each position change. For this reason, optical systems using binary code may cause occasional transition errors. In most applications this does not present a problem due to the absolute nature of the encoder, and the position is normally corrected.

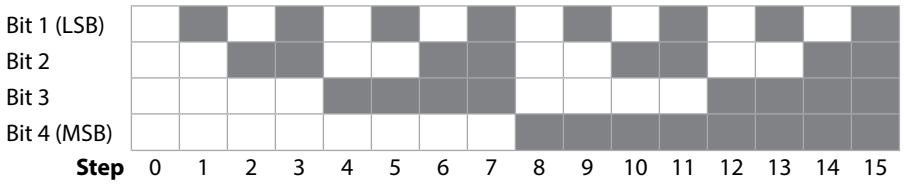

Gray Code:

The Gray Code is a single-step code. This indicates that only 1 bit is changed from one position to the next. This leads to a high position reliability. The Gray Code is used to optically read out the position for all absolute encoders.

Gray excess: The extraction of a defined part of the Gray Code leads to the gray excess code. This code enables the generation of non-binary based divisions (e.g., 360, 720, 1000, and 1440).

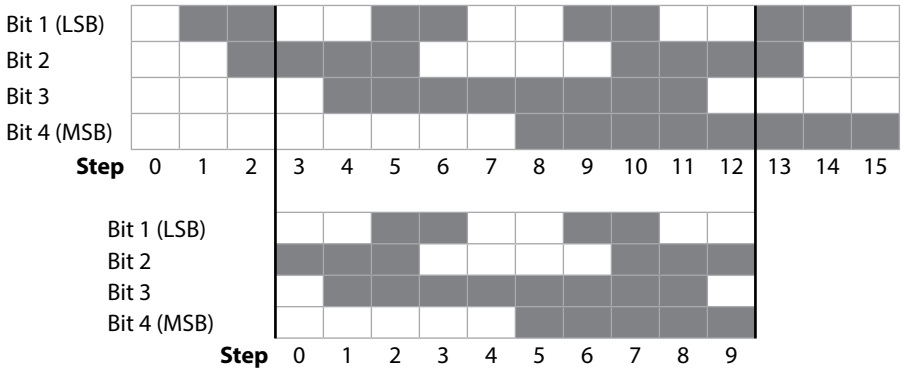

Reversion of the gray code: The code values increase when the shaft is turning clockwise. If the most significant bit (MSB) is inverted, the code values decrease when the shaft is turning clockwise.

BCD Code:

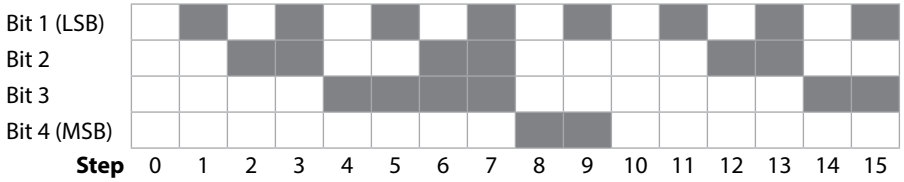

We reserve the right to make technical alterations without prior notice.

Turck Inc. | 3000 Campus Drive, Minneapolis, MN 55441 | T +1 800 544 7769 | F +1 763 553 0708 | www.turck.com

Rotary Measurement Technology - Absolute Encoders

OptoASIC and Intelligent Scan Technology™:



OptoASIC and Intelligent Scan Technology (IST) is the latest development in Absolute encoder technology. The development of an OptoASIC with Intelligent Scan Technology enabled Turck to build the first optical multiturn encoder without gears or magnetic sensors.

Eliminating mechanical parts like gears allowed Turck to make the encoder smaller than others currently on the market. These encoders offer a total resolution of up to 41 bits, a programmable multiturn encoder with up to 16 million revolutions, and a high-precision single turn with up to 17 bits resolution, all in a 39 mm diameter housing that is up to 45 mm long.

The Multiturn Gear Module (12 bit resolution):

Geared multiturn encoders are the types RM-28, RM-29, RM-35, and RM-36.

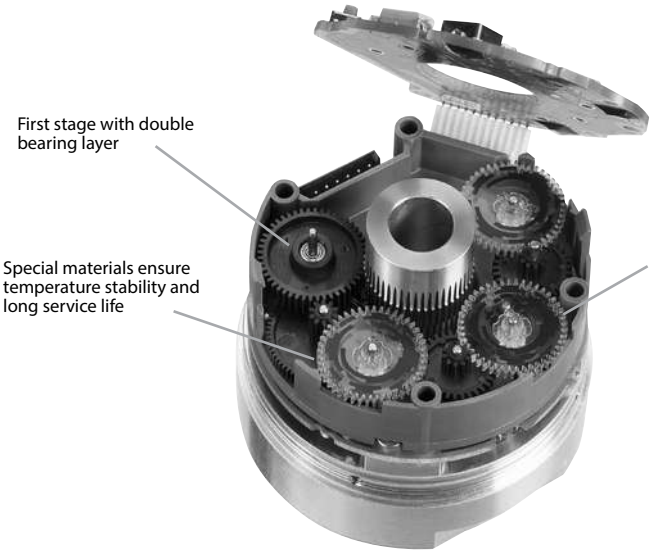

Patented Integrative Technology:

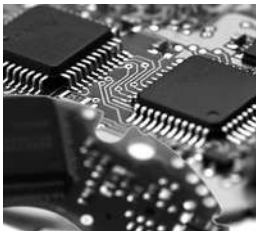

Integrative Technology, developed and patented, is a package of measures that ensures compact construction, high signal quality, high shock resistance (up to 2,500 m/S^2), high reliability and a high level of immunity to EMC.

This is achieved using an Opto ASIC: a multilayer board, shock resistant and space-saving method of mounting the sensor unit. The use of a highly optimized ASIC interface ensures the integration of several hundred individual components. Components that had previously been needed to balance the system, such as balancing potentiometers, can be dispensed with.

Advantages of Integrative Technology: Singleturn shaft encoders are available with the same dimensions as their incremental correspondents. This allows an easy mechanical substitution.

We reserve the right to make technical alterations without prior notice.

Rotary Measurement Technology - Absolute Encoders

Mechanical or Electronic Gears:

Absolute singleturn and multiturn encoders have established themselves as the standard method for measuring linear displacement or angular position. With absolute encoders, a reference trip is no longer needed after system start-up or a power-down. Multiturn encoders are now being employed where incremental encoders had dominated, such as with geared motors or lifts.

Today, all manner of multiturn encoders are available in a variety of designs. As a rule, the manufacturers offer either mechanical gears for 'counting turns' or electronic counters with electronic data storage. For many years, encoder companies have made both absolute multiturn encoders with gears or without gears, and then criticized each other for the perceived drawbacks to the designs. Turck offers both absolute mutliturn encoders without mechanical gears and with mechanical gears. Not having mechanical gears allows Turck to make more compact absolute multiturn encoders. These encoders require batteries, whereas geared multiturn encoders do not have batteries. Battery life is often a discussion point. Based on how the encoder is actually used, the calculated battery life could be as long as 75 years.

Outputs:

Different interfaces are available to transfer the position data to a controller. Turck offers a variety of outputs detailed in the following sections.

Parallel Output:

This type of transfer is very fast. All bits of a position are transferred simultaneously, each via a separate line.

Output Circuit and Recommended Input Circuit Parallel Interface:

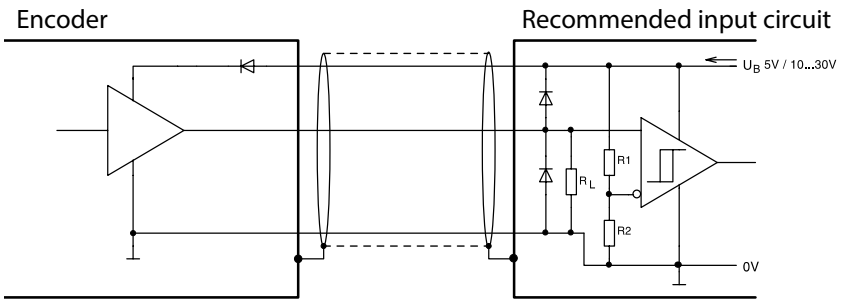

Integrated push-pull driver

Synchronous Serial Interface (SSI):

SSI is an industrial standard serial interface between an absolute encoder or sensor and a controller. The SSI protocol uses a clock pulse train from a controller to initiate a gated output from the sensor. Position data is continually updated by the sensor and made available to the shift register. Data is shifted out when the sensor receives a pulse train from the controller. SSI is widely used because of it's simplicity and noise immunity.

We reserve the right to make technical alterations without prior notice.

Turck Inc. | 3000 Campus Drive, Minneapolis, MN 55441 | T +1 800 544 7769 | F +1 763 553 0708 | www.turck.com

Rotary Measurement Technology - Absolute Encoders

Output Circuit and Recommended Input Circuit for Multiturn Encoders with SSI Output:

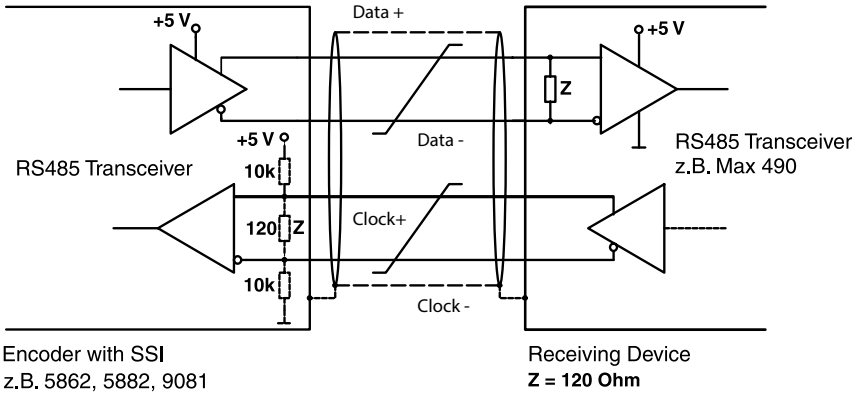

Data Transmission SSI:

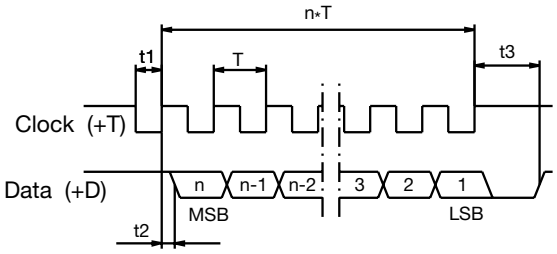

t1 = T / 2
t2 < 1 / (4 x fmax)
t3 = Monoflop time (see below)
n = Resolution in Bit
$1/f_{max}$ = < T = < 1 / fmin
f_{min} = min. SSI clock rate (see data sheet)
f_{max} = max. SSI clock rate (see data sheet)

At rest, the clock and data lines are at a high level. With the first falling clock-pulse edge, the current encoder data is stored in the buffer ready to be sent. With the next rising clock-pulse edge, the data is transmitted bit by bit, starting with the MSB. The transfer of a complete data word requires n+1 rising clock-pulse edges (n = resolution in Bit). For example, 14 clock signals are needed for a complete readout of a 13 Bit encoder. After the next positive-going clock-pulse edge, the data line will remain at a low level until the encoder is ready for a new data word. The clock line must stay high for a time longer than the mono flop time, and then can begin a new read-out sequence again with the next falling edge.

Please Note:

Only for type series RS-22, RS-30, RM-41, RM-77, RM-78: Updating the data occurs sequentially with the read-out cycle. Therefore, the data is as up-to-date as the interval time between two read-outs. A periodic read-out of the encoder in the application is recommended, using appropriately short cycle times, so that current position values are constantly maintained. It is not possible to read out the same data word several times.
Monoflop time of the encoder: t3 = max. 40µs

Only for Absolute encoders: Updating the data occurs immediately with the first falling edge of the clock signal. The data is always up-to-date. If a repeated read-out of the same data word is desired, then a new clock sequence must be started within the time interval t3. If the clock sequence is terminated before the necessary number of clock pulses needed for a complete readout of the data word has been transmitted, then the data line will go high again and signal that the last read-out sequence has been aborted. It will also indicate that it is ready for a new data word to be sent. Monoflop time of the encoder: t3 = see data sheet.

We reserve the right to make technical alterations without prior notice.

Rotary Measurement Technology - Absolute Encoders

BiSS Interface:

Open, digital sensor interface (BiSS). The bidirectional digital sensor interface (BiSS) assures the communication between the encoder and the measuring device or drive control and can, if required, simultaneously transfer the measured values of up to eight sensors.

For one to eight subscribers the interface master provides the clock signal for the simultaneous capturing of all position data as well as for the subsequent synchronous serial data transmission. Only four unidirectional RS422 data lines are required; the minimal slave electronics is located directly in the sensor ICs.

When the master sends the clock pulse on the line MA, the slave will reply on the return line SL with the captured position data. Commands or parameters are exchanged via a PWM clock sequence, although this is not necessary for the startup of the BiSS protocol.

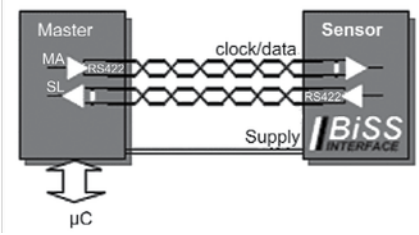

With every data cycle the master learns and compensates for the signal transit times, thus enabling high clock rates up to 10M bit/s even with cable lengths of 100 m. Varying cable conditions, for example due to drag movement, are corrected. The synchronization accuracy between several encoders on a number of axes is less than one microsecond; moreover the master keeps the signal transit times that have been experienced transparent for the controller and thus enables a further optimization.

The BiSS protocol classifies each subscriber into various data areas: sensor data, multi-cycle data and register data. These data areas are laid out differently with respect to the possibility of accessing them and to their transmission performance, which covers a wide variety of sensor applications. A bidirectional communication parameter for configuring the device, and if need be for so-called OEM parameters, is placed in the register data area. Data that change slowly, such as speed of rotation or motor temperature, occupy the multi-cycle data area, whereas data that change quickly occupy the sensor data area.

This means that there is no problem in achieving control cycle times under 10 MHz even for data words up to 64 bit. Enough space is available for redundancy, and as a rule is used for implementing a CRC (cyclic redundancy check). As they are only framed by a start and a stop bit, the sensor data is transferred at the best possible user data rate; a single multi-cycle data bit is optional. Similarly detected and triggered, the multi-cycle data bits form a second inband protocol and contribute to the redundancy of the sensor data. Permanent monitoring of the drive status and operation is possible without interfering with the controller cycle. Specific device developments by individual users are not restricted or made more expensive by a need to be compatible with other BiSS products. A BiSS subscriber is described with only a few parameters, and an XML device description file that comes with the product simplifies the startup of the controller.

Output circuit and recommended input circuit for absolute encoders with a BiSS output

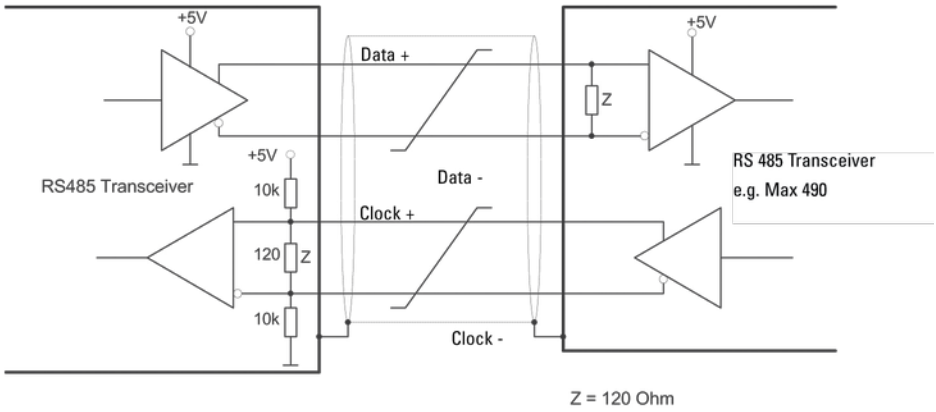

We reserve the right to make technical alterations without prior notice.

Turck Inc. | 3000 Campus Drive, Minneapolis, MN 55441 | T +1 800 544 7769 | F +1 763 553 0708 | www.turck.com

Rotary Measurement Technology - Absolute Encoders

Cable Length:

The following maximum cable lengths are recommended, depending on the output circuitry and any noise sources present.

Interface and output circuit:	Max. cable length:	Connected to:
Parallel CMOS/TTL	6.5 ft (2 m)	SPS/IPC [1]
Parallel push-pull	328 ft (100 m)	SPS/IPC [1]
SSI	up to 3,280 ft (1,000 m) [2]	SPS/IPC [1]
RS422 /RS485	3,280 ft (1,000 m)	SPS/IPC [1]
Analog 4-20 mA	656 ft (200 m)	

[1] IPC = Industrial PC
[2] Depends on clock frequency: at 100 kHz L_{max} approx. 250 m; at f = 250 kHz L_{max} approx. 50 m

Annotations:
- Depending on the application the max. allowed cable length can be shorter, especially in areas with strong electrical noise.
- Always use shielded cables
- The core diameter of the signal cores should be ≥ 0.14 mm2
- The core diameter of the voltage supply cores should be large enough depending on the cable length, that the voltage supply of the encoder is high enough and the signals do not go below the minimum levels! We strictly recommend the use of the cable types written down in the accessories.

Magnetic Measuring System Up to 50 m Measuring Length Up to 0.005 mm Resolution:

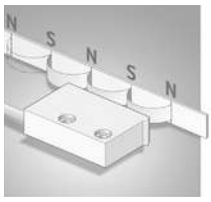

A magnetic sensor is guided across a magnetic band without coming into contact with it. The changes in polarity on the magnetic band are counted and intermediate values are interpolated. Our engineers have fine-tuned the system to such a degree that resolutions up to 0.005 mm are possible.

The system is not affected by dust, shavings or humidity and is resistant to many liquids and to oil. Assembly is easy; the magnetic band just has to be glued into place. There are no problems for calibration. The distance between the sensor and the magnetic band can be up to two mm. Repeat accuracy is very high.

Where is Our Linear Measurement System Used?



The measuring system offers an economical alternative to optical systems in applications where the high accuracy of the glass rules is not absolutely necessary, but where up until now no other suitable alternative has been available.

Because of its rugged construction, the measuring system can now be used even in tough industrial environments.

The system is not affected by vibration, nor is it damaged if subjected to high shock loads. Our flexible magnetic band can fit around very large shafts. The maximum length of the magnetic band is 50 m.

We reserve the right to make technical alterations without prior notice.

Linear Measurement Technology

Draw Wire Systems:

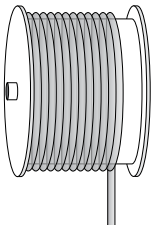

At the core of a draw wire encoder is a drum mounted on bearings, onto which a wire is wound. The winding takes place via a spring-loaded device. The number of revolutions is measured by means of an encoder. If the circumference of the drum is known, then the length can be calculated from it.

Thus, draw wire systems convert linear motion into rotary motion. This is then measured with encoders. Our spectrum ranges from miniature draw wire versions to models capable of measuring 40 m.

- Specially for demanding applications
- With analog sensors (0-10 V, 4-20 mA, potentiometer) or encoders (incremental, absolute, fieldbus)
- Measuring lengths from 250 mm up to 40,000 mm
- High travelling speed
- High acceleration
- Simple wire fixing using clip
- Quick mounting
- Diamond-polished ceramic guide
- Titanium anodized aluminum housing
- Dynamic spring traction by means of a constant force spring, long service life, approx. 2 million complete cycles.





Length Measuring Kits:

*unlimited length resolution up to 0.1 mm

Turck provides the measuring wheel, encoder and counter from one source, all in one complete kit. This kit saves you time and effort, as there is no need to assemble the component parts.



We reserve the right to make technical alterations without prior notice.

Turck Inc. | 3000 Campus Drive, Minneapolis, MN 55441 | T +1 800 544 7769 | F +1 763 553 0708 | www.turck.com

IP Protection Class

IP		Dust Protection						
		0_ Unprotected	1_Objects ≥50 mm	2_Objects ≥12.5 mm	3_Objects ≥2.5 mm	4_Objects ≥1.0 mm	5_Dust Protected	6_Dust Tight
Water Protection	0_Unprotected	IP00	IP10	IP20	IP30	IP40	IP50	IP60
	_1 Dripping Water		IP11	IP21	IP31	IP41	IP51	IP61
	_2 Dripping Water on 15° slant		IP12	IP22	IP32	IP42	IP52	IP62
	_3 Spraying Water			IP23	IP33	IP43	IP53	IP63
	_4 Splashing Water				IP34	IP44	IP54	IP64
	_4K Splashing Water High Pressure				IP34K	IP44K	IP54K	IP64K
	_5 Jet Water						IP55	IP65
	_6 Intense Jet Water						IP56K	IP66K
	_7 Temporary immersion							IP67
	_8 Continuous immersion as specified by manufacturer							IP68
	_9K Water at high pressure/ Steam jet cleaning							IP69K

We reserve the right to make technical alterations without prior notice.

Ingress Protection Classes- IEC 60529

First ID Number	Protection from penetration of…	Requirements
0	Unprotected	N/A
1	Solid Foreign Particles Ø50 mm	No full penetration of sphere with Ø50 mm
2	Solid Foreign Particles Ø12.5 mm	No full penetration of sphere with Ø12.5 mm
3	Solid Foreign Particles Ø2.5 mm	No penetration of rod with Ø2.5 mm
4	Solid Foreign Particles Ø1.0 mm	No penetration of wire with Ø1.0 mm
5	Dust	Dust may only penetrate in such quantity that function and safety are not impacted
6	Dust	No penetration of dust

Second ID Number	Protection from penetration of…	Requirements
0	Unprotected	N/A
1	Dripping water	Vertically falling drips may not cause any damage
2	Dripping water when the enclosure is in a slanted position of up to 15°	Vertically falling drips may not cause any damage
3	Spraying water	Spraying water, which is sprayed in a perpendicular angle of up to 60° may not cause any damage
4	Splashing water	Water splashing against the enclosure from every direction may not cause any damage
4K	Splashing water with increased pressure	Water splashing against the enclosure from every direction and with increased pressure may not cause any damage
5	Jet water	Water which is hosed against the enclosure from every direction may not cause damage
6	Intense jet water	Water which is hosed against the enclosure with high intensity may not cause any damage
6K	Intense jet water with increased pressure	Water which is hosed against the enclosure with high intensity and increased pressure may not cause any damage
7	Temporary immersion in water	Water may not enter the enclosure in such quantity as to cause damage when the enclosure is held under water for a set period of time using predetermined pressure (1 m for 30 min)
8	Continuous immersion in water	Water may not enter the enclosure in such quantity as to cause damage when the enclosure is held under water for a set period of time using predetermined pressure (Turck standard is 6' of water, and other chemicals, for a period of 24 hours)
9K	Water at high-pressure/steam jet cleaning	Water which is directed against the enclosure from every direction with extremely high pressure may not cause any damage (14 to 16 l/min at 8,000 to 10,000 kPa)

We reserve the right to make technical alterations without prior notice.

Turck Inc. | 3000 Campus Drive, Minneapolis, MN 55441 | T +1 800 544 7769 | F +1 763 553 0708 | www.turck.com

Warranty Terms and Conditions

RISK OF LOSS

Delivery of the equipment to a common carrier shall constitute delivery to the Purchaser and the risk of loss shall transfer at that time to Purchaser. Should delivery be delayed due to an act or omission on the part of the Purchaser, risk of loss shall transfer to the Purchaser upon notification by Turck Inc. that the order is complete and ready for shipment.

WARRANTIES

Turck Inc. (hereinafter "Turck") offers five (5) WARRANTIES to cover all products sold. They are as follows:
1) The **12-MONTH WARRANTY** is available for the products listed - generally those not covered by **LIFETIME**, **5-YEAR**, **24-MONTH** or **18-MONTH** warranty. No registration required.
2) The **18-MONTH WARRANTY** is available for the products listed - generally those not covered by **LIFETIME** or **5-YEAR WARRANTY**. No registration is required.
3) The **24-MONTH WARRANTY** is available for the products listed - generally those not covered by **LIFETIME**, **5-YEAR** or **18-MONTH**. No registration is required.
4) The **5-YEAR WARRANTY** is available generally for the products listed. No registration is required.
5) A **LIFETIME WARRANTY** is available for the products listed. It becomes effective when the accompanying Turck **LIFETIME WARRANTY REGISTRATION** is completed and returned to Turck.

GENERAL TERMS AND CONDITIONS FOR ALL WARRANTIES

- **12-MONTH STANDARD WARRANTY**
- **18-MONTH STANDARD WARRANTY**
- **24-MONTH STANDARD WARRANTY**
- **5-YEAR WARRANTY**
- **LIFETIME WARRANTY**

Turck warrants the Products covered by the respective WARRANTY AGREEMENTS to be free from defects in material and workmanship under normal and proper usage for the respective time periods listed above from the date of shipment from Turck. In addition, certain specific terms apply to the various WARRANTIES.

THESE EXPRESS WARRANTIES ARE IN LIEU OF AND EXCLUDE ALL OTHER REPRESENTATIONS MADE - BOTH EXPRESSED AND IMPLIED. THERE ARE NO WARRANTIES OF MERCHANTABILITY OR OF FITNESS FOR A PARTICULAR PURPOSE FOR PRODUCTS COVERED BY THESE TERMS AND CONDITIONS.

Turck warrants that the goods sold are as described, but no promise, description, affirmation of fact, sample model or representation, oral or written shall be part of an order, unless set forth in these terms and conditions, or are in writing and signed by an authorized representative of Turck. These WARRANTIES do not apply to any Product which has been subject to misuse, negligence, or accident - or to any Product which has been modified or repaired, improperly installed, altered, or disassembled - except according to Turck's written instructions.

These WARRANTIES are subject to the following conditions:
1) These WARRANTIES are limited to the electronic and mechanical performance only, as expressly detailed in the Product specifications and NOT to cosmetic performance.
2) These WARRANTIES shall not apply to any cables attached to, or integrated with the Product. However, the **18-MONTH WARRANTY** shall apply to cables sold separately by Turck.
3) These WARRANTIES shall not apply to any Products which are stored, or utilized, in harsh environmental or electrical conditions outside Turck's written specifications.
4) The WARRANTIES are applicable only to Products shipped from Turck subsequent to January 1, 1988.

ADDITIONAL SPECIFIC TERMS FOR:
(12-MONTH STANDARD WARRANTY) FOR LINEAR DISPLACEMENT TRANSDUCERS, EZ TRACK, RFID PRODUCTS, DRAW WIRE ASSEMBLIES AND SLIP RINGS.

(18-MONTH STANDARD WARRANTY) FOR Q-TRACK INDUCTIVE SENSORS, ULTRASONIC SENSORS, FLOW SENSORS, PRESSURE SENSORS, TEMPERATURE SENSORS, INCLINOMETERS, CABLES AND ALL NON-SENSING PRODUCTS SOLD BY TURCK INC. INCLUDING MULTI-SAFE, MULTI-MODUL, MULTI-CART AND RELATED AMPLIFIER PRODUCTS, RELAYS AND TIMERS.

(24-MONTH STANDARD WARRANTY) FOR ENCODERS EXCLUDING DRAW WIRE ASSEMBLIES.

5-YEAR WARRANTY FOR INDUCTIVE AND CAPACITIVE PROXIMITY SENSORS: THE PERIODS COVERED FOR THE ABOVE WARRANTIES AND PRODUCTS SHALL BE 12 MONTHS, 18-MONTHS, 24-MONTHS AND 5-YEARS, RESPECTIVELY, FROM THE DATE OF SHIPMENT FROM TURCK.

LIFETIME WARRANTY (OPTIONAL - REGISTRATION REQUIRED) FOR INDUCTIVE, INDUCTIVE MAGNET OPERATED AND CAPACITIVE PROXIMITY SENSORS SOLD TO THE ORIGINAL PURCHASER FOR THE LIFETIME OF THE ORIGINAL APPLICATION.

We reserve the right to make technical alterations without prior notice.

Warranty Terms and Conditions

THE FOLLOWING TERMS APPLY TO THE LIFETIME WARRANTY IN ADDITION TO THE GENERAL TERMS:

1) This WARRANTY shall be effective only when the LIFETIME WARRANTY REGISTRATION has been completed, signed by the End User and an authorized Turck Representative or Distributor and has been received by Turck no later than six (6) months after installation in the End User's Plant, or two (2) years from the date product was shipped from Turck, whichever is sooner.
2) This warranty is available only to Turck's authorized Representatives, Distributors and to the Original User. (The term "Original User" means that person, firm, or corporation which first uses the Product on a continuous basis in connection with the operation of a production line, piece of machinery, equipment, or similar device.) In the event the ownership of the product is transferred to a person, firm or corporation other than the Original User, this WARRANTY shall terminate.
3) This WARRANTY is applicable only to the Original Application. In the event the machinery, equipment, or production line to which the Product is connected, or on which it is installed, is substituted, changed, moved or replaced, the WARRANTY shall terminate.
4) This WARRANTY shall be valid only if the Product was purchased by the Original User from Turck, or from an authorized Turck Distributor, or was an integral part of a piece of machinery and equipment obtained by the Original user from an Original Equipment Manufacturer, which itself, was purchased directly from Turck or from an authorized Distributor.

PURCHASER'S REMEDIES

This Remedy shall apply to all WARRANTIES. If a Turck Distributor desires to make a WARRANTY Claim, the Distributor shall, if requested by Turck, ship the Product to Turck's factory in Minneapolis, Minnesota, postage or freight prepaid. If the User desires to make a WARRANTY Claim, they shall notify the authorized Turck Distributor from whom it was purchased or, if such Distributor is unknown, shall notify Turck. Turck shall, at its option, take any of the following two courses of action for any products which Turck determines are defective in materials or workmanship.

1) Repair or replace the Product and ship the Product to the Original Purchaser or to the authorized Turck Distributor, postage or freight prepaid; or
2) Repay to the Original Purchaser that price paid by the Original Purchaser; provided that if the claim is made under the LIFETIME WARRANTY, and such Product is not then being manufactured by Turck, then the amount to be repaid by Turck to the Original Purchaser shall be reduced according to the following schedule:

Number of Years Since Date of Purchase by Original Purchaser	Percent of Original Purchase Price To Be Paid by Turck
10	50%
15	25%
20	10%
More than 20	5%

PURCHASER'S REMEDIES SHALL BE LIMITED EXCLUSIVELY TO THE RIGHT OF REPLACEMENT, REPAIR OR REPAYMENT AS PROVIDED AND DOES NOT INCLUDE ANY LABOR COST OR REPLACEMENT AT ORIGINAL PURCHASER'S SITE. TURCK SHALL NOT BE LIABLE FOR ANY CONSEQUENTIAL DAMAGES RESULTING FROM ANY BREACH OF ANY WARRANTY, EXPRESSED OR IMPLIED, APPLICABLE TO THE PRODUCT, INCLUDING WITHOUT LIMITATION, ANY DAMAGES RESULTING FROM PROPERTY DAMAGE, PERSONAL INJURY OR BUSINESS INTERRUPTION.

CONSIDER SAFETY AND PROTECTION PRECAUTIONS

Turck takes great care to design and build reliable and dependable products, however, some products can fail eventually. You must take precautions to design your equipment to prevent property damage and personal injury in the unlikely event of failure. As a matter of policy, Turck does NOT recommend the installation of electronic controls as the sole device FOR THE PROTECTION OF PERSONNEL in connection with power driven presses, brakes, shears and similar equipment and, therefore, the customer should build in redundancy or dual control using approved safety devices for these applications.

GOVERNING LAW

The sale and purchase of Products covered hereby and all terms and conditions hereof shall be governed by the law of the States of Minnesota.

We reserve the right to make technical alterations without prior notice.

Turck Inc. | 3000 Campus Drive, Minneapolis, MN 55441 | T +1 800 544 7769 | F +1 763 553 0708 | www.turck.com

Notes:

We reserve the right to make technical alterations without prior notice.

LINEAR & ROTARY POSITION PRODUCTS

Turck Inc. sells its products through Authorized Distributors. These distributors provide our customers with technical support, service and local stock. Turck distributors are located nationwide – including all major metropolitan marketing areas.

For Application Assistance or for the location of your nearest Turck distributor, call:

1-800-544-7769

Specifications in this manual are subject to change without notice. Turck also reserves the right to make modifications and makes no guarantee of the accuracy of the information contained herein.

Literature and Media questions or concerns?
Contact Turck USA Marketing – tusa.marketing@turck.com

Turck Inc. sells its products through Authorized Distributors. These distributors provide our customers with technical support, service and local stock. Turck distributors are located nationwide – including all major metropolitan marketing areas.

For Application Assistance or for the location of your nearest Turck distributor, call:

1-800-544-7769

Specifications in this manual are subject to change without notice. Turck also reserves the right to make modifications and makes no guarantee of the accuracy of the information contained herein.

Literature and Media questions or concerns?
Contact Turck USA Marketing – tusa.marketing@turck.com

TURCK



30 subsidiaries and over
60 representations worldwide!

Printed in USA

©2020 by Turck Inc. All rights reserved. No part of the
publication may be reproduced without written permission.

B1027 A 06/20

www.turck.com