GOSSEN METRAWATT

Test adapter SECULOAD-N
for testing the off-load voltage of welding equipment per EN 60974

3-349-709-03
6/12.16

1 Standard Equipment
1 test adapter (article number Z745R)
1 measurement cable red, 1 measurement cable black,
2 measurement cables blue,
2 alligator clips blue for contacting the welding electrodes,
1 set of operating instructions German/English

2 Applications
In conjuction with a multimeter or a SECUTEST... test instrument, the **SECULOAD-N** test adapter is designed for testing welding equipment (subsequenly referred to as device under test or DUT) in accordance with standard **EN 60974-4:2007**. According to this standard, the peak values of the off-load voltage may not exceed the limit values for any possible setting.

Attention! The peak value rectifier of the **SECULOAD-N** uses rectifier diode 1N 4007 recommended by the standard. This diode is a power rectifier diode and, due to its design principle, only suitable for voltage sources with a low clock rate in the line frequency range or for voltage sources with conventional transformers. However, there is welding equipment in the market, which uses pulsed voltage sources with considerably higher clock rates. The equipment can produce pulses with high voltage which, in turn, are not completely captured by the peak value rectifier of the **SECULOAD-N**. In these cases, the voltage issued by the **SECULOAD-N** may be distinctly below the peak values in the output voltage of the welding equipment. It is imperative that this fact be taken into account in evaluating the measured values!

Special case: Welding instruments with an open-circuit voltage of less than 30 V *

In this case, the **SECULOAD-N** does not provides for any load control. Measurements are performed with a load resistance of 5 kΩ. For such low voltages, load control can be neglected, so that the measuring result is shown on the display even without pressing the **START** key.

* For the purpose of verification, perform a direct voltage measurement of your welding unit by using a multimeter or a SECUTEST... test instrument (without having the test adapter connected in this case).

Special case: Welding instruments which deactivate open-circuit voltage

In this case, a certain key at the welding instrument must be pressed consistently in order to prevent deactivation. Please refer to the operating instructions of the welding instrument or contact the manufacturer for details on such cases.

Test Sequences and Individual Measurements with the Test Adapter

The following test instruments include test sequences for welding instruments in accordance with EN 60974-4:

- **SECUTEST S2N+w**
- **SECUTEST BASE(10)**
- **SECUTEST PRO** (or Feature I01)
- **SECUSTAR FM+**



- ➪ Only **experts** who are familiar with welding, cutting and related processes are allowed to perform these tests.
- ➪ **Persons with basic electrotechnical training** are allowed to perform maintenance work and periodic tests provided that the welding equipment is not opened.

3 Safety Instructions
This instrument fulfills the requirements of the applicable EU guidelines and national regulations. We confirm this with the CE marking. The relevant declaration of conformity can be obtained from GMC-I Messtechnik GmbH. The test adapter is manufactured and tested in accordance with safety regulations IEC 61010-1/DIN EN 61010-1/VDE 0411-1.

When used for its intended purpose, the safety of the operator, as well as that of the instrument, is assured.

Please make sure that the output of the DUT is de-energized for connecting it to or disconnecting it from the test adapter.

Before using the test adapter, the off-load voltage of the welding equipment must be checked. Input voltages at the test adapter of more than 130 V are not permissible and result in the destruction of the test adapter. In this case, the welding equipment must be repaired prior to testing it with the test adapter.

In order to protect the internal resistor against overloading between the red and black socket connectors of the test adapter, these two **socket connectors may not be short-circuited**. Wait until the measured voltage is no longer applied and/or the respective capacitors are discharged (this is performed automatically during operation with a SECUTEST... test instrument).

If the test adapter should nevertheless be overloaded once, voltage measurements are no longer possible. You are kindly requested to send the test adapter to GMC-I Service GmbH for repair in this case.

The test adapter may not be used

- for testing plasma jet welding equipment
- in the event of input voltages of more than 130 V
- in the event of any visible external damage
- if it no longer functions properly

Meaning of Symbols on the Instrument


Warning concerning a source of danger (attention: observe documentation!)

CAT II Measurement category II device


Continuous, doubled or reinforced insulation


Indicates EC conformity


This device may not be disposed of with the trash. Further information regarding the WEEE mark can be accessed on the Internet at www.gossenmetrawatt.com by entering the search term 'WEEE'

Carefully read the operating instructions before use, in particular the operating instructions included with the test instrument with which you intend to use the adapter.

Opening of Equipment / Repair

The equipment may be opened only by authorized service personnel to ensure the safe and correct operation of the equipment and to keep the warranty valid.

Even original spare parts may be installed only by authorized service personnel.

In case the equipment was opened by unauthorized personnel, no warranty regarding personal safety, measurement accuracy, conformity with applicable safety measures or any consequential damage is granted by the manufacturer.

4 Connection facilities

Connection of SECUTEST S2N+w / SECUTEST S2N+(10)

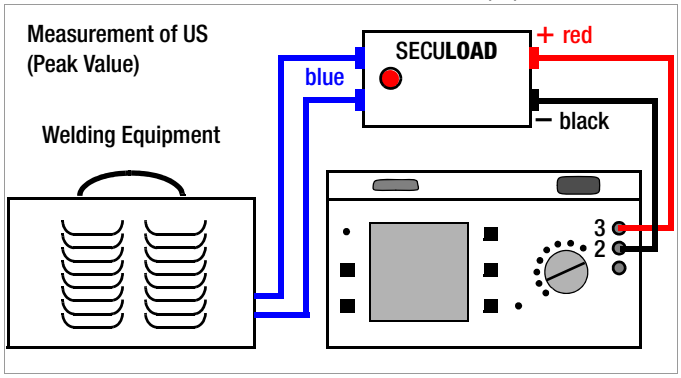

- Connect the welding current outputs with the input sockets of the test adapter (blue sockets).
- Connect the test instrument (via test sockets 2 and 3) with the output sockets (+ and –) of the test adapter.

Connection of SECUTEST S2N+w / SECUTEST S2N+(10)

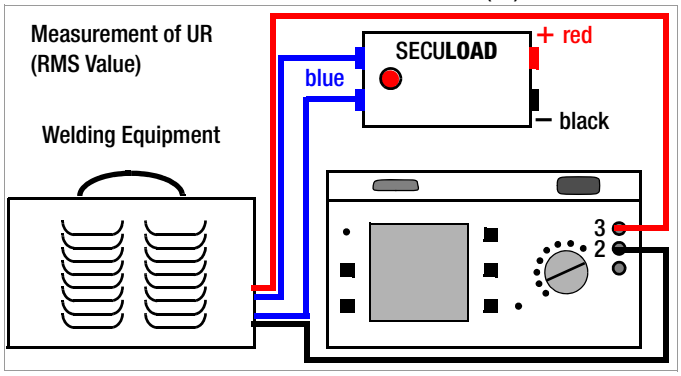

- Connect the welding current outputs with the input sockets of the test adapter (blue sockets).
- Connect the test instrument (via test sockets 2 and 3) with the welding current outputs.

Multimeter Connection for Report Generation, for Example, with SECUSTAR FM+

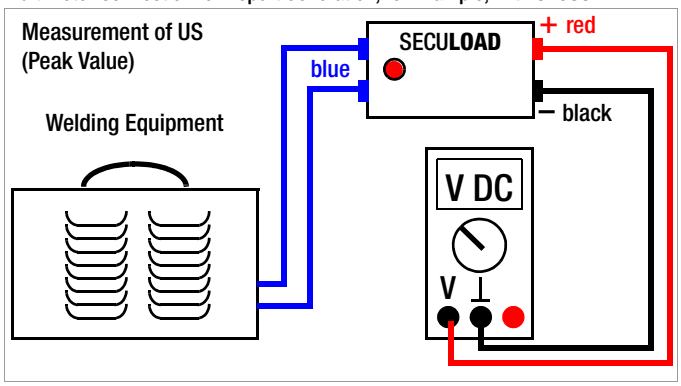

- Connect the welding current outputs with the input sockets of the test adapter (blue sockets).
- **Measurement of US:** Connect a multimeter (e.g. **METRAHIT X-TRA**) with the output sockets (+ and –) of the test adapter.

Multimeter Connection for Report Generation, for Example, with SECUSTAR FM+

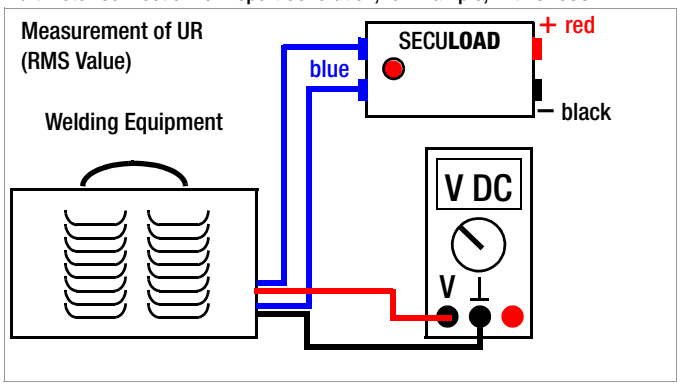

- Connect the welding current outputs with the input sockets of the test adapter (blue sockets).
- **Measurement of UR:** Connect a multimeter (e.g. **METRAHIT X-TRA**) with the welding current outputs.

Connection of SECUTEST PRO (for Test Sequence)

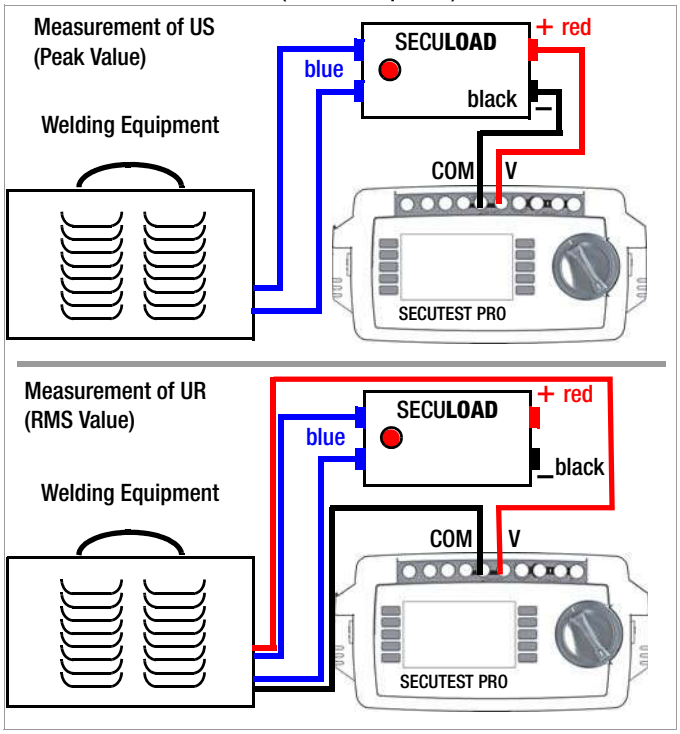

- Connect the welding current outputs with the input sockets of the test adapter (blue sockets).
- **Measurement of US with SECUTEST PRO:** Connect the test instrument (via the test sockets COM and V) with the output sockets (+ and –) of the test adapter.
- **Measurement of UR with SECUTEST PRO:** Connect the test instrument (via the test sockets COM and V) with the welding current outputs.

Connection of SECUTEST BASE(10) (for Test Sequence)

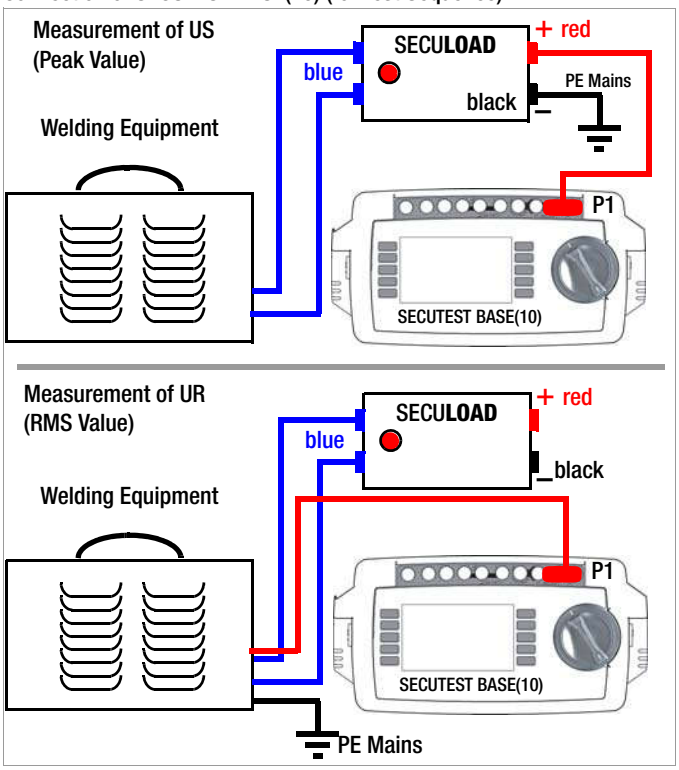

- Connect the welding current outputs with the input sockets of the test adapter (blue sockets).
- **Measurement of US with SECUTEST BASE(10)**: Connect the black output socket (–) of the test adapter directly with the mains PE. Connect test probe P1 of the test instrument directly with the red socket (+) of the test adapter voltage output.
- **Measurement of UR with SECUTEST BASE(10)**: Connect one welding current output directly with the mains PE. Connect test probe P1 of the test instrument directly with the second welding current output.

5 Individual Measurements

Preparations for Individual Measurements

- Read the operating instructions for your test instrument and familiarize yourself with the voltage test function of your test instrument.

- **SECUTEST S2N+(10) or SECUTEST S2N+w:**
  Voltage measurement is performed in switch position **Menu** under parameter $\mathbf{U_{AC/DC}}$, as described in chapter „Individual Measurements“, sub-section „Alternating /Direct Voltage“ of the operating instructions for the test instrument.
- **SECUSTAR FM+:**
  There is no connection provided for the test adapter.
  Voltage is measured with a multimeter. When using a multimeter, activate its min/max value memory.
- **SECUTEST PRO** (or Feature I01):
  Connection is established via the input sockets COM and V, in the same way as connecting a multimeter. Voltage measurement is performed in switch position **U**.

Performing Individual Measurements

- Switch the DUT on and wait for approx. 5 seconds.
- Press and hold the **START** key at the test adapter. After about 1 to 2 seconds a rising test current is present and **LED** ⓘ lights up.
- As soon as the maximum current is reached and the **Stop** LED lights up, release the **START** key at the test adapter.
- Read out the maximum voltage value saved to the respective measuring or test instrument and check whether it is below the maximum value specified for the respective welding equipment. In the **SECUTEST S2N+(10)** or **SECUTEST S2N+w** test instrument, the min/max values can be displayed with key ▽ as from firmware version 7.1.
- Separate the DUT from the voltage source.

Attention!
When the **Temp. LED** lights up, the test adapter must be disconnected from the DUT. Allow the test adapter to cool down for 10 to 20 minutes before using it again.

Note
Always disconnect the test adapter from the DUT when it is not required in order to avoid unnecessary self-heating.

6 Characteristic Values

Operating voltage	30 V ... 130 V (RMS) AC / DC
Output voltage	max. 200 V DC
Current consumption	Standby: 5 ... 45 mA, Load current max. 650 mA
Input resistance	200 Ω ... 5.4 kΩ
Output resistance	10 kΩ
Measuring category	CAT II 300 V
Voltage supply	from DUT
Dimensions, Weight	W x H x D: 13 x 6.7 x 4.5 cm, approx. 200 g
Protection	Housing: IP40, terminals IP20
Interference emission	EN 61326-1:2013 class B
Interference immunity	EN 61326-1:2013

7 Device Return and Environmentally Compatible Disposal

The instrument is a category 9 product (monitoring and control instrument) in accordance with ElektroG (German Electrical and Electronic Device Law). This device is subject to the RoHS directive. Furthermore, we make reference to the fact that the current status in this regard can be accessed on the Internet at www.gossenmetrawatt.com by entering the search term WEEE.
We identify our electrical and electronic devices in accordance with WEEE 2012/19/EU and ElektroG with the symbol shown to the right per DIN EN 50419.
These devices may not be disposed of with the trash. Please contact our service department regarding the return of old devices.

8 Repair and Replacement Parts Service Calibration Center * and Rental Instrument Service

When you need service, please contact:

GMC-I Service GmbH
Service Center
Thomas-Mann-Strasse 20
90471 Nürnberg • Germany
Phone +49 911 817718-0
Fax +49 911 817718-253
E-Mail service@gossenmetrawatt.com
www.gmci-service.com

This address is only valid in Germany.
Please contact our representatives or subsidiaries for service in other countries.

* **DAkkS Calibration Laboratory for Electrical Quantities D-K-15080-01-01 accredited per DIN EN ISO/IEC 17025**
Accredited measured quantities: direct voltage, direct current values, DC resistance, alternating voltage, alternating current values, AC active power, AC apparent power, DC power, capacitance, frequency and temperature

Competent Partner

GMC-I Messtechnik GmbH is certified in accordance with DIN EN ISO 9001.
Our DAkkS calibration laboratory is accredited by the Deutsche Akkreditierungsstelle GmbH (National accreditation body for the Republic of Germany) in accordance with DIN EN ISO/IEC 17025 under registration number D-K-15080-01-01.
We offer a complete range of expertise in the field of metrology: from **test reports** and **proprietary calibration certificates** right on up to **DAkkS calibration certificates**.
Our spectrum of offerings is rounded out with free **test equipment management**.
An **on-site DAkkS calibration station** is an integral part of our service department. If errors are discovered during calibration, our specialized personnel are capable of completing repairs using original replacement parts.
As a full service calibration laboratory, we can calibrate instruments from other manufacturers as well.

9 Product Support

When you need support, please contact:

GMC-I Messtechnik GmbH
Product Support Hotline
Phone +49 911 8602-0
Fax +49 911 8602-709
E-Mail support@gossenmetrawatt.com

Printed in Germany • Subject to change without notice • A pdf version is available on the internet

GOSSEN METRAWATT

GMC-I Messtechnik GmbH
Südwestpark 15
90449 Nürnberg • Germany

Phone +49 911 8602-111
Fax +49 911 8602-777
E-Mail info@gossenmetrawatt.com
www.gossenmetrawatt.com