# E12231

## Mounting adapter for tie-rod/integrated profile cylinders

ADAPT TIE ROD/PROFILE

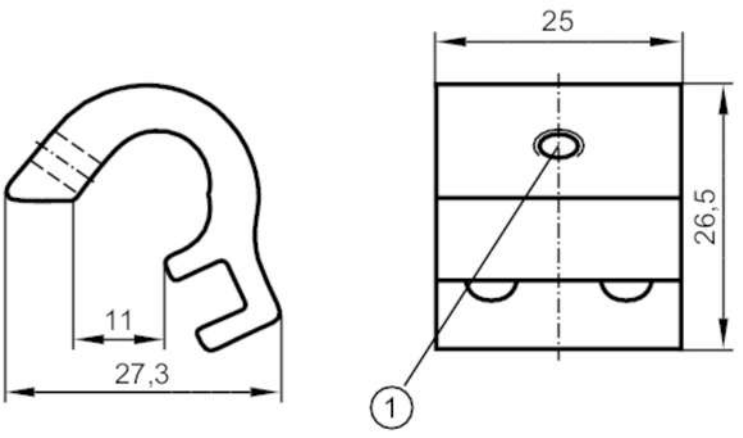


1 Mounting screw SW 2

| | | |
|---|---|---|
| **Application** | | |
| Design | | for types MKT, for types MKT |
| **Mechanical data** | | |
| Weight | [g] | 16.1 |
| Materials | | Adapter: aluminium; screw: stainless steel |
| Clamping range | [mm] | 5...11 |
| **Remarks** | | |
| Pack quantity | | 1 pcs. |