# PM1703

## Flush pressure sensor

PM-025-REA01-E-ZVG/US

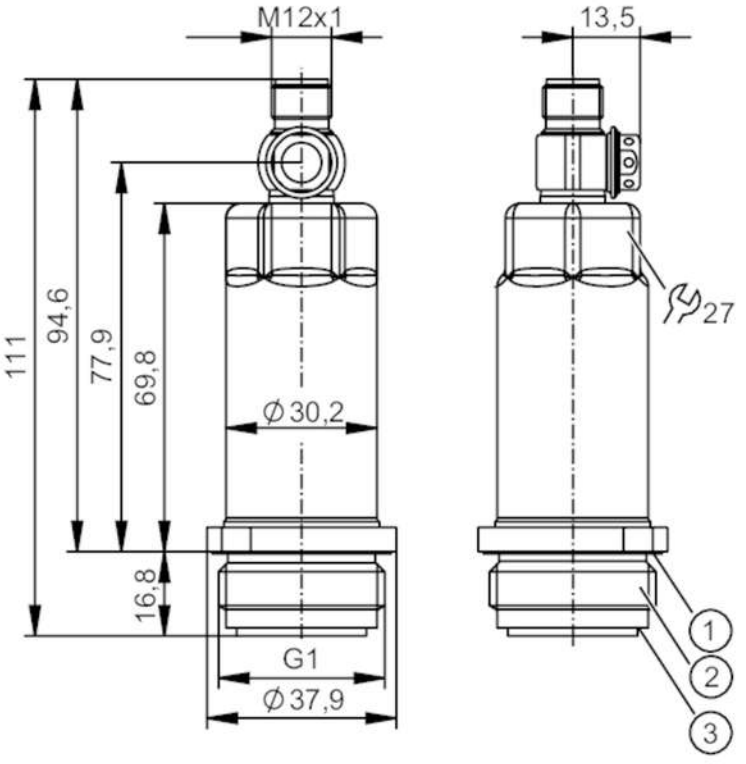


1 groove with sealing ring (DIN EN ISO 1179-2)
2 external thread G1 (Aseptoflex Vario )
3 groove for sealing ring

3A ACS CE CRN cULus LISTED EC 1935/2004 EHEDG Certified FCM FDA IO-Link Reg31 UKCA

| | | | |
|---|---|---|---|
| **Product characteristics** | | | |
| Number of inputs and outputs | Number of digital outputs: 1; Number of analogue outputs: 1 | | |
| Measuring range | -1...25 bar | -14.6...362.6 psi | -0.1...2.5 MPa |
| Process connection | threaded connection G 1 external thread Aseptoflex Vario | | |
| **Application** | | | |
| Special feature | Gold-plated contacts | | |
| Measuring element | ceramic-capacitive pressure measuring cell | | |
| Temperature monitoring | no | | |
| Application | flush mountable for the food and beverage industry | | |
| Media | viscous media and liquids with suspended particles; liquids and gases | | |
| Medium temperature [°C] | -25...150 | | |
| Min. bursting pressure | 350 bar | 5075 psi | 35 MPa |
| Pressure rating | 100 bar | 1450 psi | 10 MPa |
| Vacuum resistance [mbar] | -1000 | | |
| Type of pressure | relative pressure; vacuum | | |
| No dead space | yes | | |
| MAWP (for applications according to CRN) [bar] | 60 | | |
| **Electrical data** | | | |
| Operating voltage [V] | 18...30 DC | | |

# PM1703

## Flush pressure sensor

PM-025-REA01-E-ZVG/US

| | | |
|---|---|---|
| Min. insulation resistance | [MΩ] | 100; (500 V DC) |
| Protection class | | III |
| Reverse polarity protection | | yes |
| Integrated watchdog | | yes |
| 2-wire | | |
| Current consumption | [mA] | 3.5...21.5 |
| Power-on delay time | [s] | 1 |
| 3-wire | | |
| Current consumption | [mA] | < 45 |
| Power-on delay time | [s] | 0.5 |

### Inputs / outputs

| | |
|---|---|
| Number of inputs and outputs | Number of digital outputs: 1; Number of analogue outputs: 1 |

### Outputs

| | | |
|---|---|---|
| Total number of outputs | | 2 |
| Output signal | | analogue signal; IO-Link; (configurable) |
| Number of digital outputs | | 1; (IO-Link) |
| Number of analogue outputs | | 1 |
| Analogue current output | [mA] | 4...20; (scalable) |
| Max. load | [Ω] | 700; (Ub = 24 V; (Ub - 9 V) / 21.5 mA) |
| Short-circuit proof | | yes |
| Overload protection | | yes |

### Measuring/setting range

| | | | |
|---|---|---|---|
| Measuring range | -1...25 bar | -14.6...362.6 psi | -0.1...2.5 MPa |
| Analogue start point | -1...20 bar | -14.6...290 psi | -0.1...2 MPa |
| Analogue end point | 4...25 bar | 58...362.6 psi | 0.4...2.5 MPa |
| In steps of | 0.01 bar | 0.2 psi | 0.001 MPa |
| Factory setting | ASP = 0.0 bar | AEP = 25.0 bar | |

### Accuracy / deviations

| | |
|---|---|
| Repeatability [% of the span] | < ± 0,1; (with temperature fluctuations < 10 K; Turn down 1:1) |
| Characteristics deviation [% of the span] | < ± 0,2; (linearity incl. hysteresis and repeatability, limit value setting to DIN EN IEC 62828-1) |
| Linearity deviation [% of the span] | < ± 0,15; (Turn down 1:1) |
| Hysteresis deviation [% of the span] | < ± 0,15; (Turn down 1:1) |
| Long-term stability [% of the span] | < ± 0,1; (Turn down 1:1; per year) |

Total deviation over temperature range

| Temperature range | total deviation |
|---|---|
| -25...15 °C | Characteristics deviation ± 0,05 % of the span / 10 K |
| 15...80 °C | Characteristics deviation |
| 80...150 °C | Characteristics deviation ± 0,1 % of the span / 10 K |

| | |
|---|---|
| Notes on the accuracy / deviation | for further details see section Diagrams and graphs |

# PM1703

## Flush pressure sensor

PM-025-REA01-E-ZVG/US

| | | | |
|---|---|---|---|
| **Response times** | | | |
| Damping for the analogue output dAA | [s] | 0...4 | |
| 2-wire | | | |
| Step response time analogue output | [ms] | 30 | |
| 3-wire | | | |
| Step response time analogue output | [ms] | 7 | |
| **Interfaces** | | | |
| Communication interface | | IO-Link | |
| Transmission type | | COM2 (38,4 kBaud) | |
| IO-Link revision | | 1.1 | |
| SDCI standard | | IEC 61131-9 | |
| Profiles | | Digital Measuring Sensor (0x000A), Identification and Diagnosis (0x4000) | |
| SIO mode | | no | |
| Required master port type | | A | |
| Process data analogue | | 3 | |
| Min. process cycle time | [ms] | 3.2 | |
| IO-Link resolution pressure | [bar] | 0.005 | |
| IO-Link process data (cyclical) | | **function** | **bit length** |
| | | pressure | 16 |
| | | device status | 4 |
| IO-Link functions (acyclical) | | application specific tag; internal temperature | |
| Supported DeviceIDs | | **Type of operation** | **DeviceID** |
| | | default | 660 |
| **Operating conditions** | | | |
| Ambient temperature | [°C] | -25...80 | |
| Storage temperature | [°C] | -40...100 | |
| Protection | | IP 67; IP 68; IP 69K | |
| **Tests / approvals** | | | |
| EMC | | DIN EN 61000-6-2 | |
| | | DIN EN 61000-6-3 | |
| Shock resistance | | DIN EN 60068-2-27 | 50 g (11 ms) |
| Vibration resistance | | DIN EN 60068-2-6 | 20 g (10...2000 Hz) |
| MTTF | [years] | 323 | |
| Note on approval | | factory certificate available as download at www.factory-certificate.ifm | |
| UL approval | | UL Approval no. | J021 |
| **Mechanical data** | | | |
| Weight | [g] | 307.6 | |
| Housing | | cylindrical | |
| Dimensions | [mm] | Ø 30.2 / L = 111 | |
| Materials | | stainless steel (316L/1.4404); PBT | |
| Materials (wetted parts) | | ceramics (99.9 % Al2O3); stainless steel (316L/1.4435); surface characteristics: Ra < 0,4 / Rz 4; PTFE | |
| Min. pressure cycles | | 100 million | |

# PM1703

## Flush pressure sensor

PM-025-REA01-E-ZVG/US

| | | |
|---|---|---|
| Tightening torque | [Nm] | 35 |
| Process connection | | threaded connection G 1 external thread Aseptoflex Vario |

## Remarks

| | |
|---|---|
| Pack quantity | 1 pcs. |

## Electrical connection

Connector: 1 x M12; coding: A; Contacts: gold-plated




### Connection

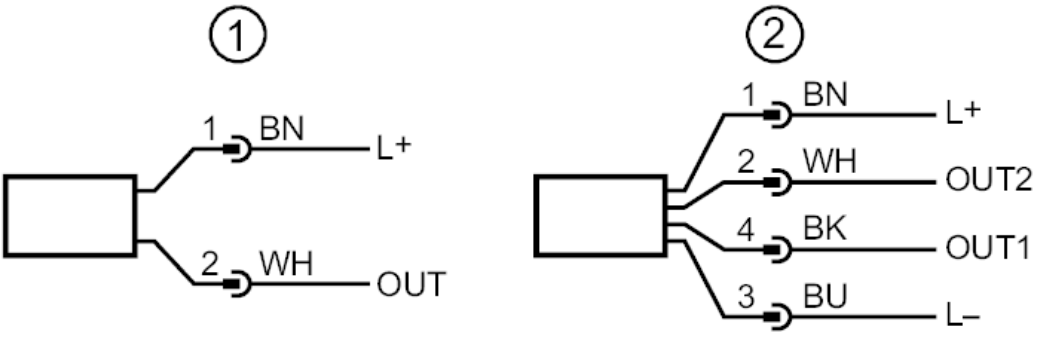


| | |
|---|---|
| 1 | connection for 2-wire operation ( analogue ) |
| 2 | connection for 3-wire operation ( analogue / IO-Link )<br>OUT1 : IO-Link<br>OUT2 : analogue output |

# PM1703

## Flush pressure sensor

PM-025-REA01-E-ZVG/US

## Diagrams and graphs

ambient temperature influence on the accuracy

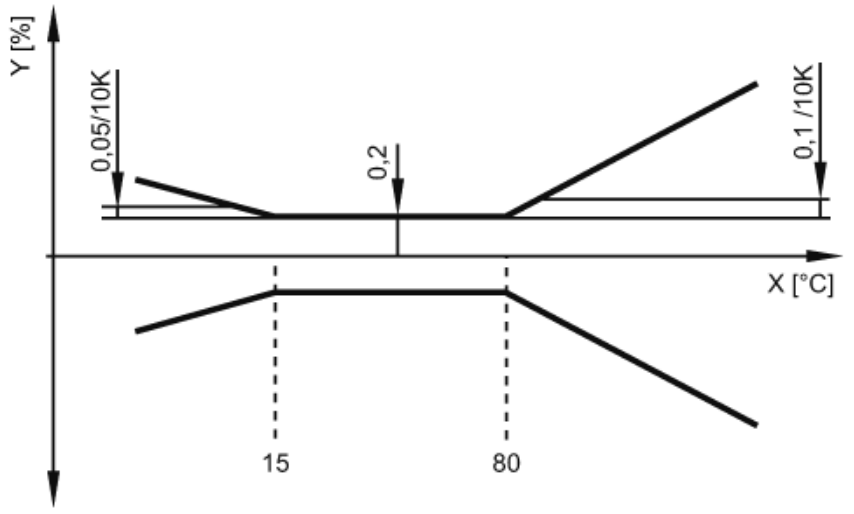


X temperature

Y total deviation