Inductive sensor

BES M12MI-PSC40B-BV05
BES0065

BALLUFF
sensors worldwide

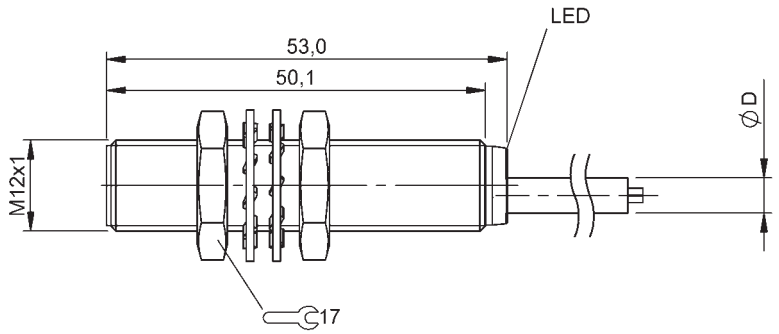

- **PNP**
- **Normally open (NO)**
- **4.00 mm**
- **Flush (shielded)**
- **Cable, PVC, 5.00 m**

IND. CONT. EQ 81U2 for use in the secondary of a class 2 source of supply Environmental - Type 1 Enclosure

General attributes

Approvals / Conformity	cULus CE EAC
Basic standard	IEC 60947-5-2
Enclosure Type per IEC 60529	IP68 according to BWN PR 20
Function indicator	Yes
Operating distance marking	■■
Polarity reversal protected	Yes
Power indicator	No
Protection Class	II
Short circuit protected	Yes
Trademark	GLOBAL
MTTF	640 a

Electrical attributes

Connection type	Cable
Eff. operating current Ie	200 mA
Eff. operating voltage Ue DC	24.0 V
Electrical version	DC, direct current
Load capacitance max. (at Ue)	0.500 µF
Max. no-load cur. Io undamped	3.0 mA
Minimum operating current Im	0 mA
No-load current Io damped max.	6.0 mA
Operating voltage UB max. DC [V]	30.0 V
Operating voltage UB min. DC [V]	10.0 V
Rated insulation voltage Ui	250 VAC
Rated short circuit current	100 A
Ripple max. (% of Ue)	15 %
Switching freq. f max. (at Ue)	1000 Hz
Switching function	Normally open (NO)
Switching output	PNP
Voltage drop static max.	3.0 V

Mechanical attributes

Ambient temperature Ta max.	70 °C
Ambient temperature Ta min.	-25 °C
Assured operating distance Sa	3.20 mm
Cable diameter D max.	4.7 mm
Cable jacket material	PVC
Cable length	5.00 m
Conductor cross-section	0.34 mm²
Depth	53.0 mm
Diameter d1	M12x1
Eff. operating distance Sr	4.00 mm
Housing material	CuZn
Mech. installation condition	Flush (shielded)
Mounting length	50.0 mm
Number of conductors	3
Rated operating distance Sn [mm]	4.00 mm
Sensing face material	LCP
Surface protection	Nickel-free coating
Tightening torque	10 Nm

Remarks

The sensor is functional again after the overload has been eliminated.

For further information on MTTF/B10d, please refer to the MTTF / B10d Certificate.

Specification of the MTTF value and the B10d value do not represent any binding quality and/or life expectancy guarantees.

