Brand of NTN Group

Technical data

UCF215-47

Bearing units



Grey cast housing, radial insert ball bearing with socket set screws,seal with slinger

KIT CONTENT

UC215-47G2, F215

VISUAL (S)

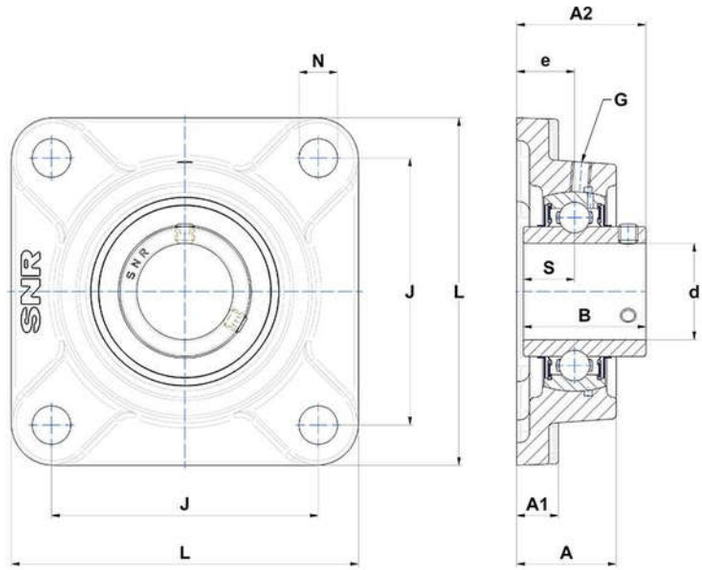

PRODUCT DEFINITION

Brand	SNR
A - Housing height	56 mm
A1 - Housing foot height / flange height	22 mm
A2 - Total height from mounting surface	78,5 mm
B - Width of Inner Ring	77,8 mm
d - Shaft diameter	74,613 mm

PRODUCT DEFINITION	
e - Distance mounting surface to bearing center	34 mm
G - Grease fitting	M10x1
J - Mounting holes distance	159 mm
L - Housing width / diameter	200 mm
N - Mounting hole dimension	19 mm
S - Distance front side/bearing centre	33,3 mm

PRODUCT PERFORMANCE	
C - Dynamic load rating	66000000 mN
C0 - Static load rating	49500000 mN
Operating temperature min.	253,15 °K
Operating temperature max.	373,15 °K

OTHER FEATURES	
Mass	5,83 kg
Recommended tightening torque for set screw	27.1 N-m