Brand of NTN Group

Technical data

UC205-15G2

Insert bearings



Spherical outer diameter, fixing by socket set screw, seal with slinger

VISUAL (S)

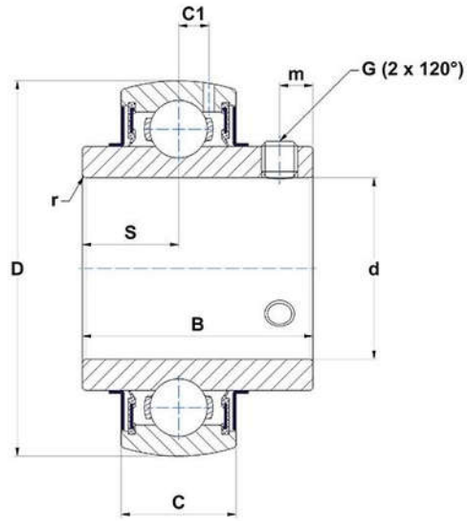

PRODUCT DEFINITION

Brand	SNR
B - Width of Inner Ring	34 mm
C - Width of Outer Ring	17 mm
C1 - Distance center of OR to center of lubrication zone	4,3 mm
d - Shaft diameter	23,813 mm
D - Outer diameter of OR	52 mm
G - Set screw size	1/4-28UNF
m - Distance to set screw	5,5 mm

UC205-15G2
Insert bearings

PRODUCT DEFINITION	
r - Radius Inner Ring	0.6
S - Distance front side/bearing centre	14,3 mm
f0 - Factor	14
SW - Wrench size	3,175 mm

PRODUCT PERFORMANCE	
C - Dynamic load rating	14000000 mN
C0 - Static load rating	7880000 mN
Operating temperature min.	253,15 °K
Operating temperature max.	373,15 °K

OTHER FEATURES	
Mass	0,21 kg
Recommended tightening torque for set screw	3.7 N-m

BEARING FREQUENCIES	
BPFO - Over rolling frequency on outer ring (60 rpm)	3.58178020565553 Hz
BPFI - Over rolling frequency on inner (60 rpm)	5.41821979434447 Hz
BSF - Over rolling frequency on rolling element (60 rpm)	4.69673855838714 Hz
BRF - Rotational frequency – rolling element (60 rpm)	2.34836927919357 Hz
FTF - Rotational frequency - cage (60 rpm)	0.39797557840617 Hz