PN3529
PN-0-1BREG14-MFRKG/US/ /V

Pressure sensors

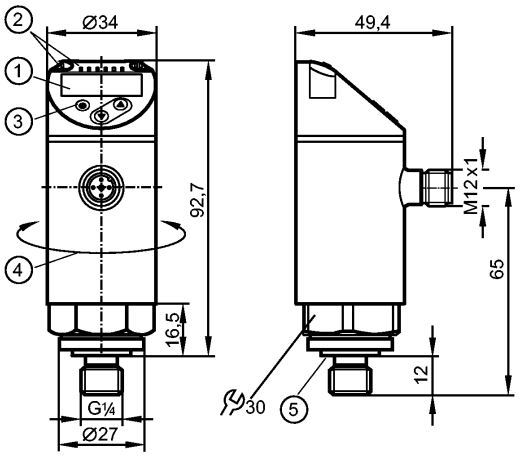

1: 4-digit alphanumeric display / alternating indication of red and green
2: LEDs (display unit / switching status)
3: Programming button
4: Upper part of the housing can be rotated by 345°
5: Process connection sealing FKM / DIN 3869

Product characteristics

Electronic pressure sensor					
M12 connector					
Function programmable					
Measuring element: ceramic-capacitive pressure measuring cell					
Process connection: G ¼ A / M5 I (according to DIN EN ISO 1179-2)					
2 outputs OUT1 = switching output OUT2 = analogue output					
4-digit alphanumeric display / alternating indication of red and green					
Measuring range: -1000...0 mbar / -14.5...0 psi / -100...0 kPa / -29.5...0 inHg					
Application					
Application		Type of pressure: relative pressure Group 2 fluids according to the Pressure Equipment Directive (PED), group 1 fluids on request			
Pressure rating		20000 mbar	290 psi	2000 kPa	590 inHg
Bursting pressure min.		50000 mbar	725 psi	5000 kPa	1450 inHg
Vacuum resistance	[mbar]	-1000			
Medium temperature	[°C]	-25...80			
Electrical data					
Electrical design		DC PNP			
Operating voltage	[V]	18...30 DC [1])			
Current consumption	[mA]	< 35			
Insulation resistance	[MΩ]	> 100 (500 V DC)			
Protection class		III			
Reverse polarity protection		yes			
Outputs					
Output		2 outputs OUT1 = switching output OUT2 = analogue output			
Output function		normally open / closed programmable; 4...20 mA or 0...10 V			
Current rating	[mA]	150; 200 (...60 °C); 250 (...40 °C)			
Voltage drop	[V]	< 2.5			
Short-circuit protection		pulsed			

PN3529 - Electronic pressure sensor - eclass: 27201302 / 27-20-13-02

Overload protection		yes			
Switching frequency	[Hz]	≤ 170			
Analogue output		4...20 mA; 0...10 V			
Max. load	[Ω]	4...20 mA: max. 500			
Min. load resistance	[Ω]	0...10 V: min. 2000			
Measuring / setting range					
Measuring range		-1000...0 mbar	-14.5...0 psi	-100...0 kPa	-29.5...0 inHg
Setting range					
Set point, SP		-990...0 mbar	-14.40...0 psi	-99...0 kPa	-29.3...0 inHg
Reset point, rP		-995...-5 mbar	-14.45...-0.05 psi	-99.5...-0.5 kPa	-29.4...-0.1 inHg
in steps of		5 mbar	0.05 psi	0.5 kPa	0.1 inHg
Accuracy / deviations					
Accuracy / deviations (in % of the span)					
Switch point accuracy		< ± 0.5			
Characteristics deviation *)		< ± 0.25 (BFSL) / < ± 0.5 (LS)			
Hysteresis		< ± 0.25			
Repeatability **)		< ± 0.1			
Long-term stability ***)		< ± 0.05			
Temperature coefficients (TEMPCO) in the temperature range -25...80° C (in % of the span per 10 K)					
Greatest TEMPCO of the zero point		0.2			
Greatest TEMPCO of the span		0.2			
Reaction times					
Power-on delay time	[s]	0.3			
Min. response time switching output	[ms]	< 3			
Delay time programmable dS, dr	[s]	0...50			
Damping for the switching output (dAP)	[s]	0...4			
Damping for the analogue output (dAA)	[s]	0...4			
Response time analogue output	[ms]	< 3			
Integrated watchdog		yes			
Software / programming					
Programming options		hysteresis / window function; NO / NC; on delay, off delay; damping; display unit; current/ voltage output			
Interfaces					
IO-Link device					
Transfer type		COM2			
IO-Link revision		1.1			
SDCI standard		IEC 61131-9			
IO-Link device ID		434 d / 00 01 b2 h			
Profiles		Smart Sensor: Process Data Variable; Device Identification, Device Diagnosis			
SIO mode		yes			
Required master port class		A			
Process data analogue		1			
Process data binary		1			
Min. process cycle time	[ms]	2.3			
Environment					
Ambient temperature	[°C]	-25...80			
Storage temperature	[°C]	-40...100			
Protection		IP 65 / IP 67			
Tests / approvals					
Pressure equipment directive		Sound engineering practice			
EMC		DIN EN 61000-6-2 DIN EN 61000-6-3			
Shock resistance		DIN EN 60068-2-27	50 g (11 ms)		
Vibration resistance		DIN EN 60068-2-6	20 g (10...2000 Hz)		

PN3529 - Electronic pressure sensor - eclass: 27201302 / 27-20-13-02

MTTF	[Years]	181
UL approval number		J004
Mechanical data		
Process connection		G ¼ A / M5 I (according to DIN EN ISO 1179-2)
Process connection sealing		FKM (to DIN 3869)
Materials (wetted parts)		stainless steel (316L / 1.4404); Al2O3 (ceramics); FKM
Housing materials		stainless steel (316L / 1.4404); PBT+PC-GF 30; PBT-GF 20; PC
Switching cycles min.		100 million
Tightening torque	[Nm]	25...35 (recommended tightening torque²)
Restrictor element integrated		no (can be retrofitted)
Weight	[kg]	0.257
Displays / operating elements		
Display		Display unit 4 x LED green (mbar, psi, kPa, inHg) Switching status 1 x LED yellow 4-digit alphanumeric display / alternating indication Measured values of red and green
Electrical connection		
Connection		M12 connector; Gold-plated contacts
Wiring		

Core colours

BK	black
BN	brown
BU	blue
WH	white



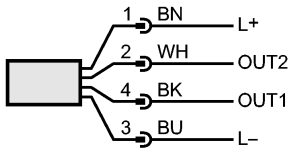

OUT1: switching output or IO-Link
OUT2: 4...20 mA / 0...10 V
Colours to DIN EN 60947-5-2

Remarks		
Remarks		*) BFSL = Best Fit Straight Line / LS = Limit Value Setting **) with temperature fluctuations < 10 K ***) in% of the span / 6 months ¹) to EN50178, SELV, PELV ²) Depends on lubrication, seal and pressure rating
Pack quantity	[piece]	1