

V2 Draw Latch

Over-center · Small

- **Torsion spring to accommodate application variances**

Material and Finish

Stainless steel or steel, zinc plated

Performance Details

Steel
Clamping force:
330 N (75 lbf) Min.
700 N (160 lbf) Max.

Stainless Steel
Clamping force:
260 N (60 lbf) Min.
530 N (120 lbf) Max.

Notes

Spring loaded anchor plate compensates up to 2.3 (0.09) for irregularities in sealing and gasket set

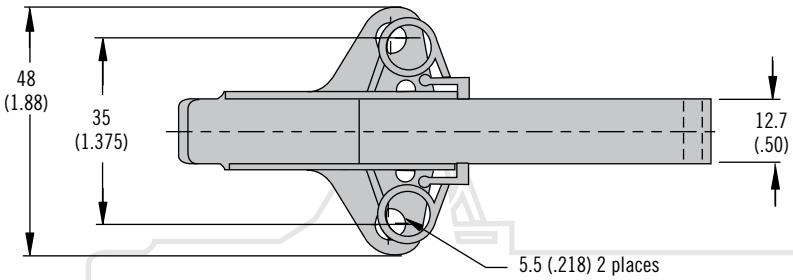

Short Blade

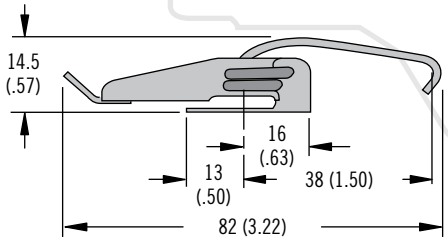

Long Blade

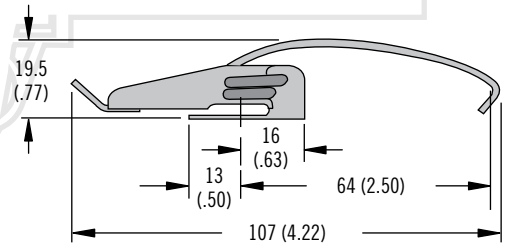

Wire Sealing

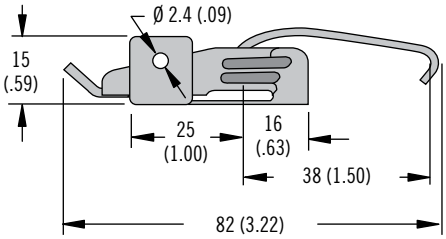

Padlockable

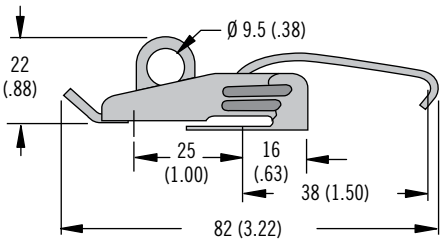

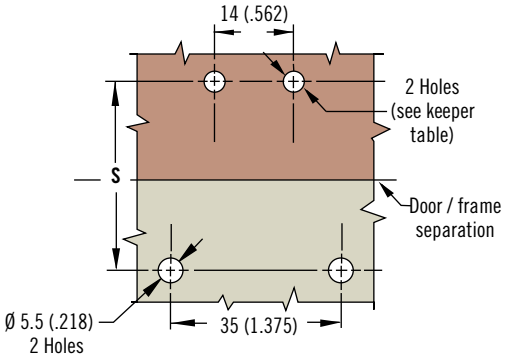

Keeper

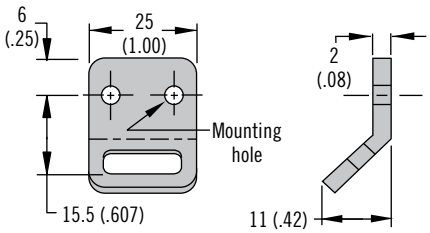

Part Number

See table

Order latch and keeper separately

Description	Style	S Dimension		Part Number	
		Min.	Max.	Steel	Stainless Steel
Latch	Short blade	55 (2.17)	57.3 (2.26)	V2-0025-07	V2-0025-52
	Long blade	80.7 (3.17)	83 (3.26)	V2-0068-07	~
	Wire sealing	55 (2.17)	57.3 (2.26)	V2-0034-07	V2-0034-52
	Padlockable	55 (2.17)	57.3 (2.26)	V2-0026-07	V2-0026-52
Keeper	3.4 (.135) mounting holes			V2-0018-07	V2-0018-52
	5.5 (.218) mounting holes			V2-0054-07	V2-0054-52

Dimensions in millimeters (inch) unless otherwise stated

V4 Draw Latch

Over-center · Large



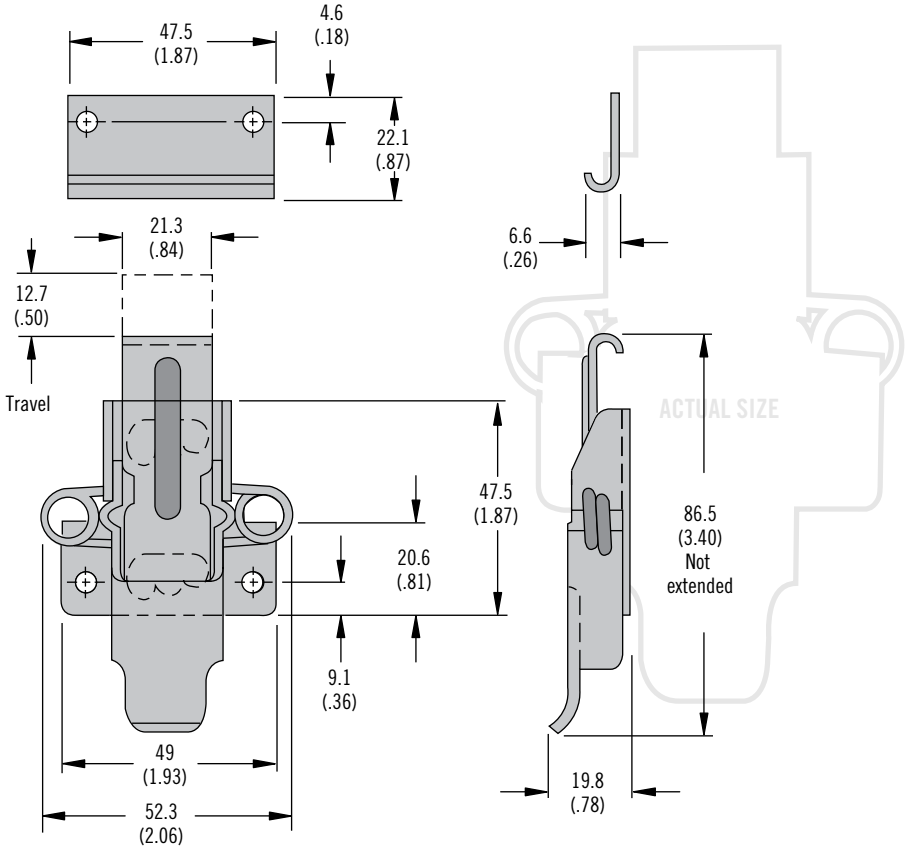

- **Torsion spring to accommodate application variances**

Material and Finish

Stainless steel or steel, zinc plated

Performance Details

Steel
Average ultimate load:
3500 N (786 lbf)

Stainless Steel
Average ultimate load:
3800 N (850 lbf)

Notes

Spring loaded anchor plate compensates up to 2.3 (0.09) for irregularities in sealing and gasket set

Adjustable Installation

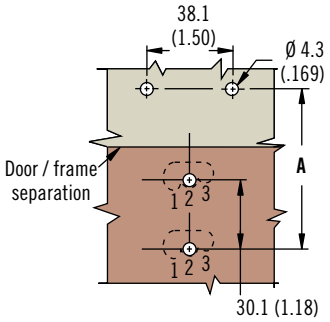

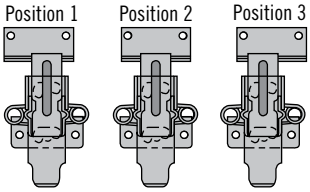

Fixed Installation

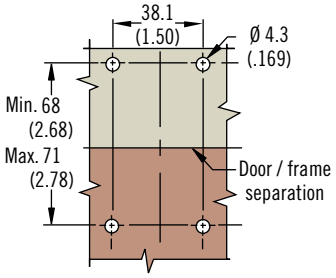

Position Number	Dimensions A	
	Min.	Max.
1	71.4 (2.81)	73.7 (2.90)
2	69.9 (2.75)	72.1 (2.84)
3	68 (2.68)	70.6 (2.78)

Description	Part Number	
	Steel	Stainless Steel
Latch	V4-0006-02	V4-0006-52
Keeper	V4-0009-02	V4-0009-52

Part Number

See table

Order latch and keeper separately