E61444

Draw-wire mechanism for encoders

DRAW WIRE 15000

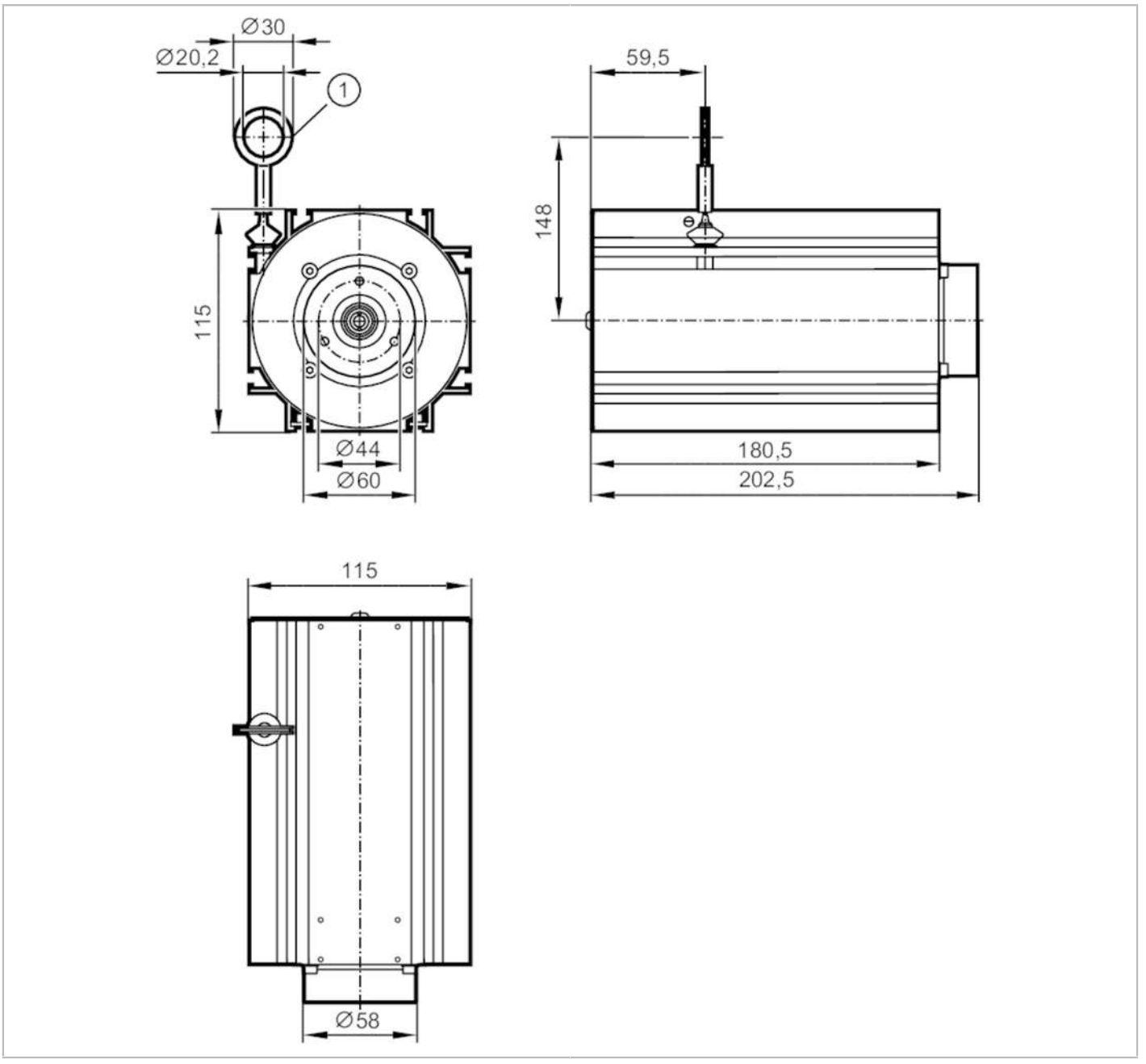

Product characteristics		
Shaft design		solid shaft
Shaft diameter	[mm]	6
Application		
Design		for encoders with 58 mm synchro flange and 6 mm solid shaft
Accuracy / deviations		
Accuracy		± 0.01 % FSO
Repeatability		± 0,001 % FSO
Operating conditions		
Ambient temperature	[°C]	-20...80
Storage temperature	[°C]	-40...80
Storage humidity	[%]	5...95; (non condensing)

E61444

Draw-wire mechanism for encoders

DRAW WIRE 15000

Tests / approvals			
Shock resistance	IEC628-2-27	50 g / 20 ms	
Vibration resistance	IEC68-2-6	20 g / 20..200 Hz	

Mechanical data				
Weight	[g]	3824.8		
Dimensions	[mm]	115 x 180.7 x 115		
Top flange diameter	[mm]	58		
Materials		housing: aluminium anodised; wire: stainless steel polyamide coated		
Shaft design		solid shaft		
Shaft diameter	[mm]	6		
Max. measuring length	[mm]	15000		
Wire drum circumference	[mm]	315		
Wire diameter	[mm]	1		
Wire connection		20,2; (eyelet)		
Wire properties		max. speed of wire displacement	[m /s]	2
		max. wire acceleration	[g]	3
		max. extension force	[N]	25
		min. retraction force	[N]	8
Fixing flange		synchro-flange		

Accessories	
Items supplied	screws: 2 x M4
	cylinder screws: 4 x M4
	washers
	synchro-flange
	Coupling for encoders

Remarks	
Pack quantity	1 pcs.

Diagrams and graphs

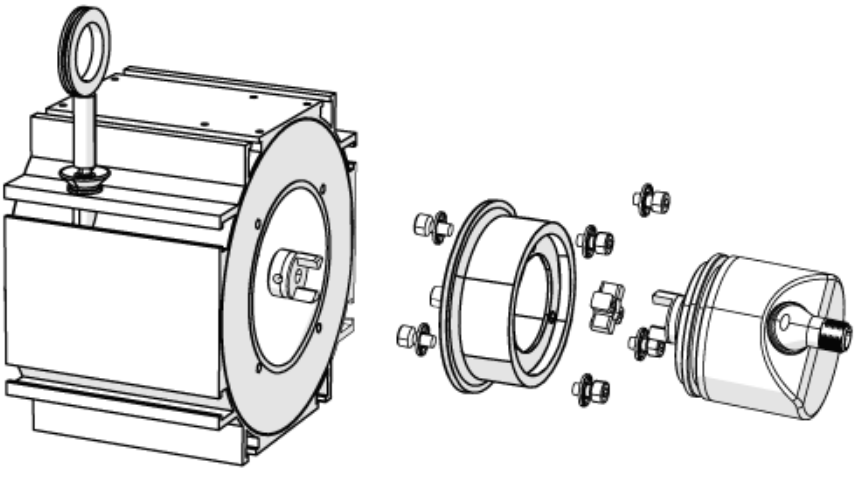

Installation instruction