Pressure regulator, Series MU1-RGS

R412006578

General series information
AVENTICS Series MU1 Air Preparation Units

- The AVENTICS Series MU1 components are ideal for applications in harsh environments. They offer large thread connections to guarantee a high compressed air flow rate and provide reliable filtration, regulation and lubrication.

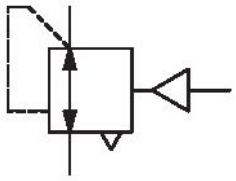

Technical data

Industry	Industrial
Function	Standard pressure regulator
Parts	Pressure regulator
Pressure gauge	without pressure gauge
Mounting orientation	Any
Regulator type	Diaphragm-type pressure regulator
Port	G 2
Nominal flow Qn	50000 l/min
Regulation range min.	0.5 bar
Regulation range max.	16 bar
Working pressure min.	0.5 bar
Working pressure max	25 bar
Min. ambient temperature	-10 °C
Max. ambient temperature	80 °C
Activation	Pneumatically
Regulator function	with relieving air exhaust
Pressure supply	single
Control pressure max.	16 bar
Medium	Compressed air Neutral gases
Weight	4.68 kg

Material

Housing material	Die-cast aluminum
Seal material	Acrylonitrile butadiene rubber
Part No.	R412006578

Technical information

The pressure dew point must be at least 15 °C less than ambient and medium temperature and may not exceed 3 °C.

Nominal flow Qn with secondary pressure p2 = 6 bar at Δp = 1 bar

Mounting type: for installing in piping

Dimensions

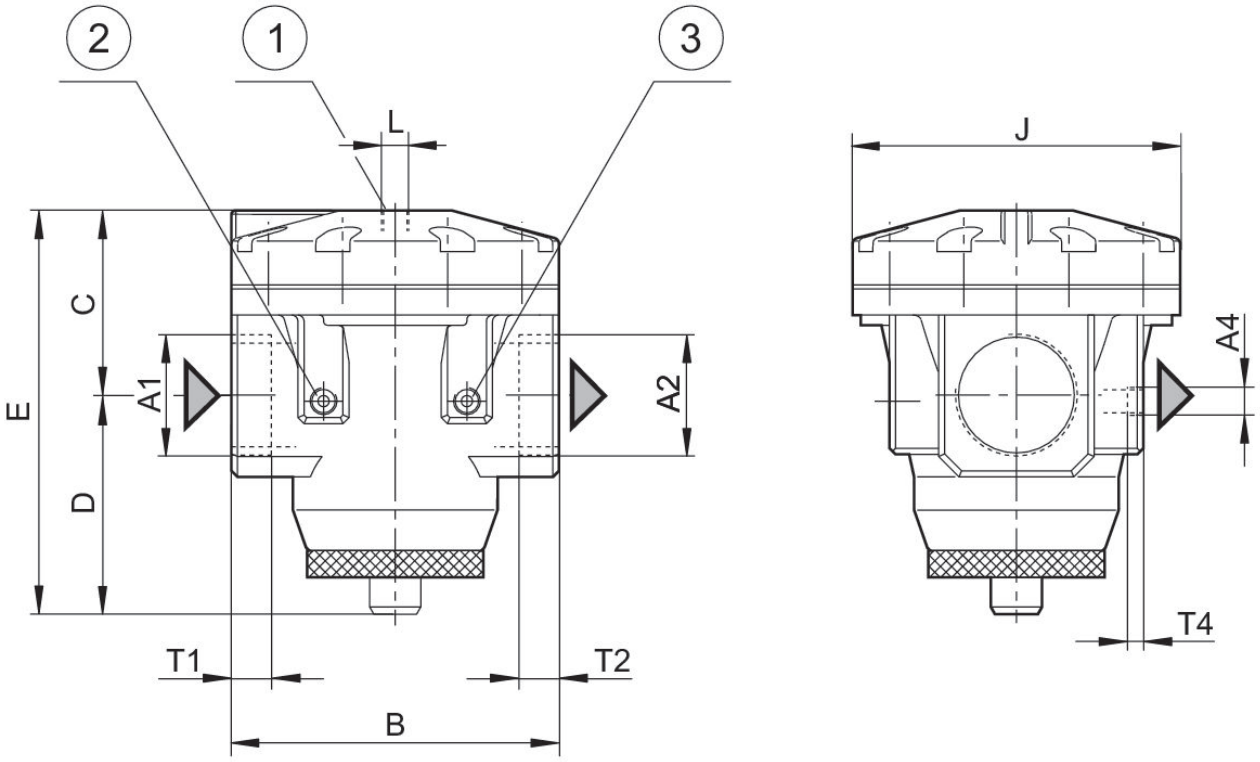

1) Pilot connection
2) Pressure gauge connection P1
3) Pressure gauge connection P2

Part No.	A1	A2	A4	B ±5	C ±5	D ±5	E ±7	J ±5	L
R412006578	G2	G2	G 1/4	160	90	107	197	160	G 1/4

Part No.	T1	T2	T4						
R412006578	30	30	9.5						

Part No.	
R412006578	

Flow rate characteristic (secondary range p2: 0.5 - 10 bar)

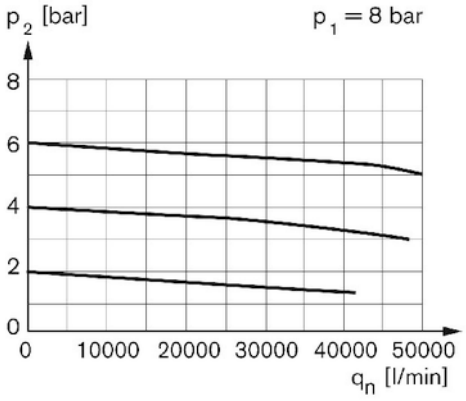

p1 = Working pressure p2 = Secondary pressure qn = Nominal flow

Pressure characteristics curve

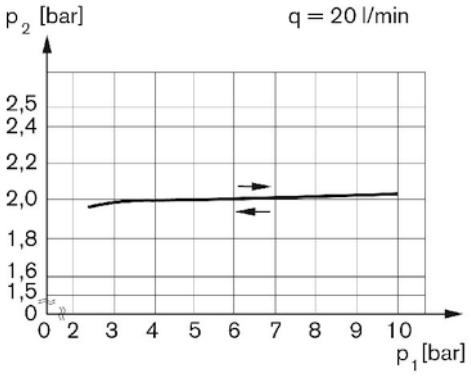

p1 = working pressure p2 = secondary pressure q = flow rate
* starting point

Application example

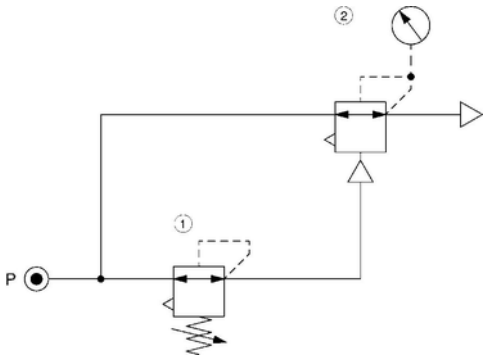

1) precision pressure regulator 2) pressure regulator valve, pneumatically operated