LineLIGHT Fusion 1500 24V RGB Clip A



Part No.: **300.100.64**

MECHANICAL DATA	
Length	1545 mm
Width	33 mm
Height	23 mm
Materials	ABS Aluminium PC Stainless steel
Dome colour	Tranclucent
Housing colour	Black
Protection category	IP54 IP65
Connection	M12 plug 5-pole
Type of fixing	Built-in mounting
Working temperature minimum	-30°C
Working temperature maximum	+50°C
Weight with packaging	1520 g
Product weight	1282 g
Min. Tightening torque	0.3Nm
Max. Tightening torque	0.6Nm

ELECTRICAL DATA	
Operating voltage	24V
Operating voltage type	DC
Operating voltage tolerance	+/- 10%
Rated operational voltage	24 VDC
Rated operational current	860 mA
Protection class	Protection class 3
Pollution degree	3 In the connection area: 2
Overvoltage category	I

OPTICAL DATA	
Light source	LED
Light colour	MC 7 colours
Optical signal image	Permanent
Length illuminated area (mm)	1500
Service life optical	50,000 h maximum

ACOUSTIC DATA	
Volume (max) at 1m distance	85dB

! For additional installation and mounting information, refer to the appropriate user guide at www.werma.com. This printed copy is for information only and is subject to alteration.

LineLIGHT Fusion 1500 24V RGB Clip A

Acoustic signal image	Pulse tone
Number of tones	1 tone
Audio frequency	3850 Hz
Acoustic service life	5,000 h minimum

APPROVAL DATA	
Conforms with CE	Yes
Conforms with RoHS directive	Yes
WEEE	Yes
Conforms with RED directive	No
Conforms with ATEX-directive	No
Conforms with CCC-Ex	No
Conforms with CCC	No
Conforms with UL	No
Conforms with FCC	No
Conforms with IC	No
EAC certificate available	No
Conforms with UKCA (Importer)	Yes (WERMA (UK) Ltd.)
Conforms with CMIM	No
Conforms with AS-I	No
Conforms with DNV	No
Conforms with RoHS CN	10 years
Conforms with VdS	No

! For additional installation and mounting information, refer to the appropriate user guide at www.werma.com. This printed copy is for information only and is subject to alteration.

LineLIGHT Fusion 1500 24V RGB Clip A

DRAWING

Unit:mm

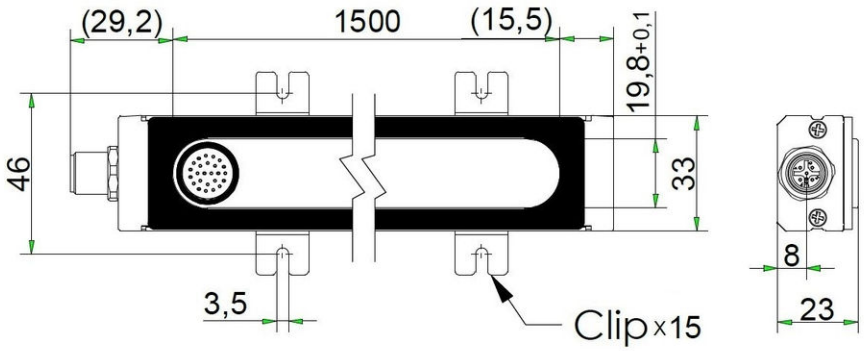

Mounting Diagram_Clip

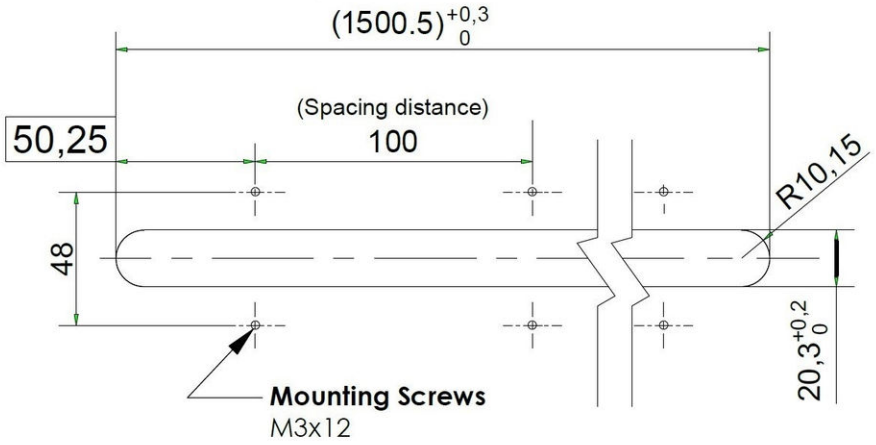

If IP65 is not needed,
the amount of **Clip** can be Reduced.
And **Spacing distance** can user-defined.

! For additional installation and mounting information, refer to the appropriate user guide at www.werma.com. This printed copy is for information only and is subject to alteration.