E20838

Connecting cable with socket

ADOGH080MSS0005B08

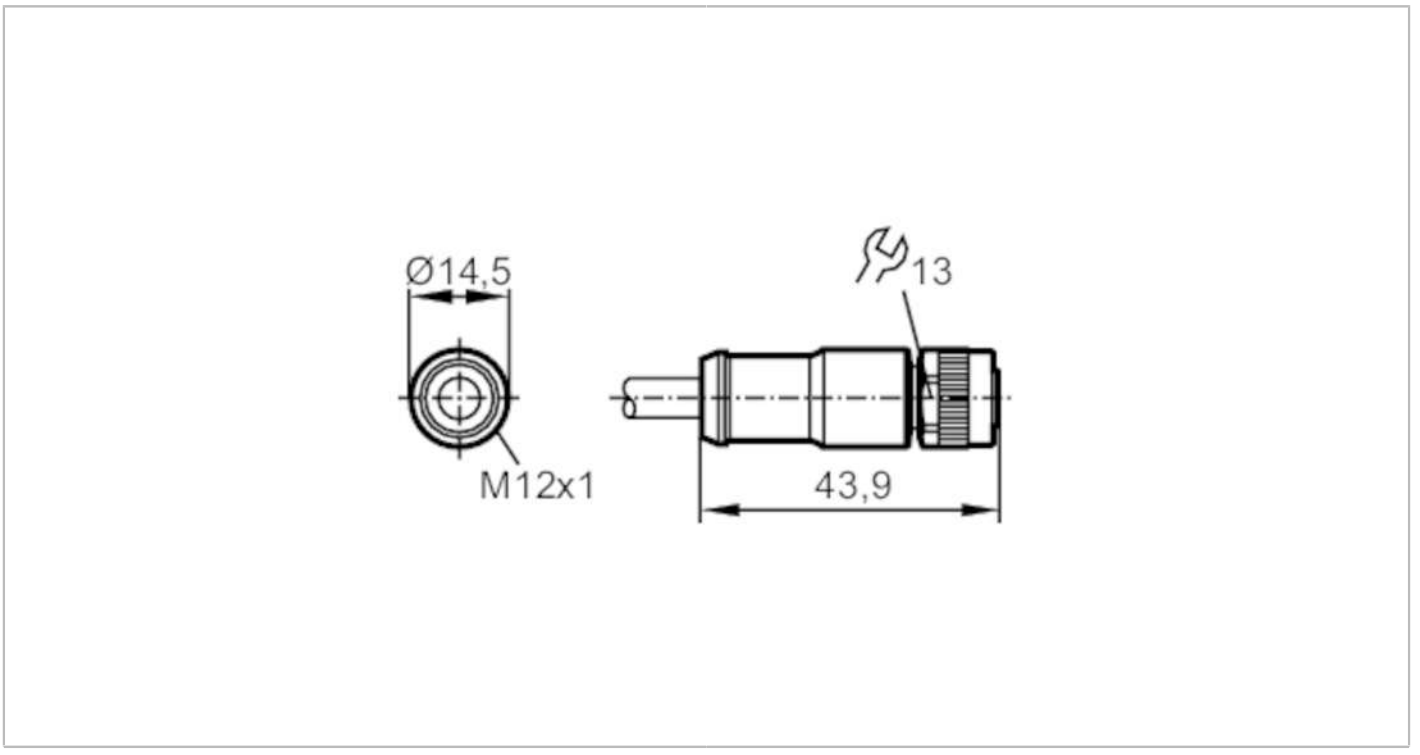

Application		
Special feature		Screened cable
Electrical data		
Operating voltage	[V]	< 60 AC/DC
Operating conditions		
Ambient temperature	[°C]	-25...85
Protection		IP 67
Mechanical data		
Weight	[g]	290.7
Dimensions	[mm]	14.5 x 14.5 x 43.9
Materials		TPU
Moulded-body material		TPU
Material nut		diecast zinc, nickel-plated
Remarks		
Pack quantity		1 pcs.

E20838

Connecting cable with socket

ADOGH080MSS0005B08

Electrical connection

Cable: 5 m, PUR, black, shielded; 7 x 0.25 mm² (14 x Ø 0.15 mm)

Electrical connection - socket

Connector: 1 x M12, straight; coding: A; Moulded body: TPU; Locking: diecast zinc, nickel-plated



Connection

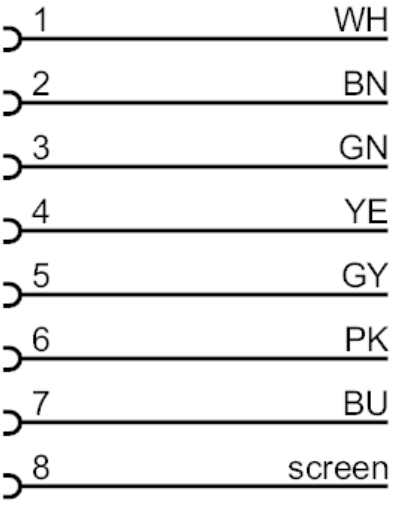

colours to DIN 47100	Core colours :
BN =	brown
BU =	blue
GN =	green
GY =	grey
PK =	pink
WH =	white
YE =	yellow
screen =	screen