Technical data sheet
Polarized retro-reflective photoelectric sensor
Part no.: 50127021
PRK46C/4W-M12



For Illustration purposes only

Contents

- Technical data
- Dimensioned drawings
- Electrical connection
- Diagrams
- Operation and display
- Reflectors & reflective tapes
- Part number code
- Notes
- Further information
- Accessories

Technical data

Basic data

Series	46C
Operating principle	Reflection principle

Special version

Special version	Warning output

Optical data

Operating range	0.1 ... 24 m (guaranteed operating range), With reflector TK(S) 100x100
Operating range limit	0.1 ... 30 m (typical operating range), With reflector TK(S) 100x100
Light source	LED, Red
Wavelength	630 nm
Transmitted-signal shape	Pulsed
LED group	Exempt group (in acc. with EN 62471)

Electrical data

Protective circuit	Polarity reversal protection
	Short circuit protected
	Transient protection

Performance data

Supply voltage U_B	10 ... 30 V, DC, Incl. residual ripple
Residual ripple	0 ... 15 %, From U_B
Open-circuit current	0 ... 20 mA

Outputs

Number of digital switching outputs	2 Piece(s)

Switching outputs

Type	Digital switching output
Voltage type	DC
Switching current, max.	100 mA
Switching voltage	high: ≥(U_B-2V)
	low: ≤ 2 V

Switching output 1

Assignment	Connection 1, pin 4
Switching element	Transistor, PNP
Switching principle	Light switching

Switching output 2

Assignment	Connection 1, pin 2
Switching element	Transistor, PNP
Switching principle	U_B switching
Function	Warning output

Time behavior

Switching frequency	500 Hz
Response time	1 ms
Readiness delay	300 ms

Connection

Number of connections	1 Piece(s)

Connection 1

Function	Signal OUT
	Voltage supply
Type of connection	Connector
Thread size	M12
Type	Male
Material	Plastic
No. of pins	4 -pin
Encoding	A-coded

Mechanical data

Dimension (W x H x L)	20.5 mm x 76.3 mm x 44 mm
Housing material	Plastic
Plastic housing	PC-PBT
Lens cover material	Plastic / PMMA
Net weight	60 g
Housing color	Red
Type of fastening	Through-hole mounting
	Via optional mounting device
Recommended tightening torque for M3 fastening	0.9 N·m
Recommended tightening torque for M4 fastening	1.4 N·m
Compatibility of materials	ECOLAB

Operation and display

Type of display	LED
Number of LEDs	2 Piece(s)

Environmental data

Ambient temperature, operation	-40 ... 60 °C
Ambient temperature, storage	-40 ... 70 °C

Certifications

Degree of protection	IP 67
	IP 69K
Protection class	III
Approvals	c UL US
Standards applied	IEC 60947-5-2

Classification

Customs tariff number	85365019
ECLASS 5.1.4	27270902
ECLASS 8.0	27270902
ECLASS 9.0	27270902
ECLASS 10.0	27270902
ECLASS 11.0	27270902
ECLASS 12.0	27270902
ECLASS 13.0	27270902
ECLASS 14.0	27270902
ECLASS 15.0	27270902
ETIM 5.0	EC002717
ETIM 6.0	EC002717
ETIM 7.0	EC002717
ETIM 8.0	EC002717
ETIM 9.0	EC002717
ETIM 10.0	EC002717

Dimensioned drawings

All dimensions in millimeters

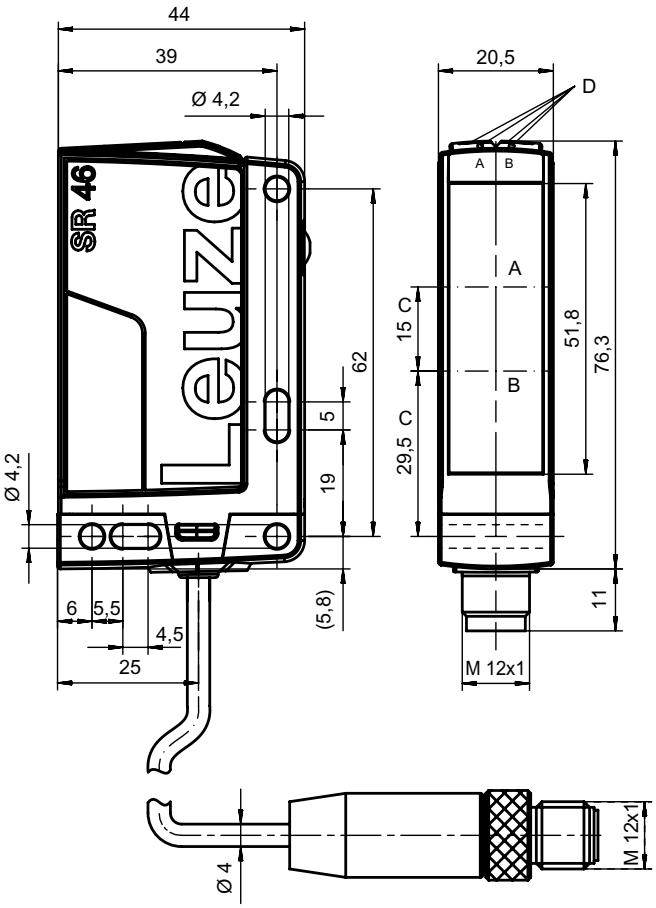

A Receiver
B Transmitter
C Optical axis
DA Green LED
DB Yellow LED

Electrical connection

Connection 1

Function	Signal OUT
	Voltage supply
Type of connection	Connector
Thread size	M12
Type	Male
Material	Plastic
No. of pins	4 -pin
Encoding	A-coded

Pin	Pin assignment
1	V+
2	OUT WARN
3	GND
4	OUT 1

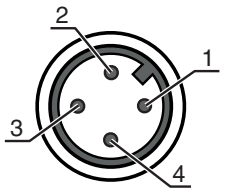

Diagrams

Typ. response behavior (TKS100x100)

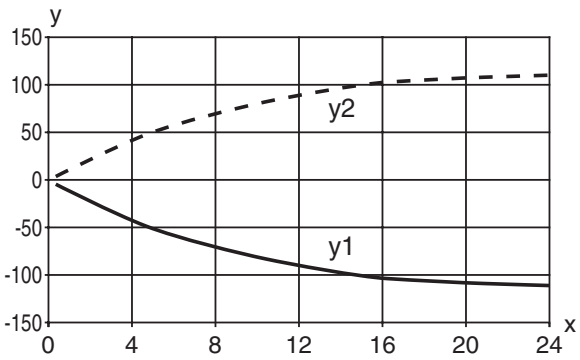

x Distance [m]
y Misalignment [mm]

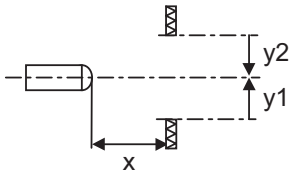

Typ. function reserve

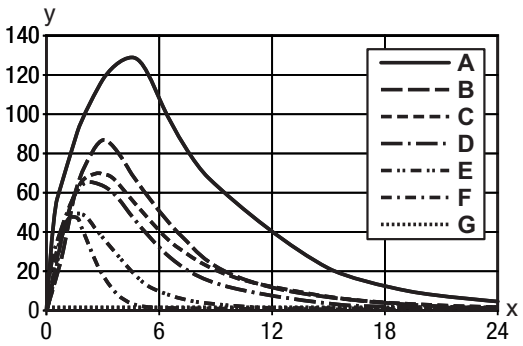

x Distance [m]
y Function reserve

A TKS 100x100
B TK 82.2
C MTKS 50x50.1
D TKS 40x60
E TKS 20x40
F Film REF 4-A-50x50
G Switching point

Operation and display

LED	Display	Meaning
1	Green, continuous light	Operational readiness
2	Yellow, continuous light	Light path free
	Yellow, flashing	Light path free, no function reserve

Reflectors & reflective tapes

	Part no.	Designation	Operating range Operating range limit	Description
	50117583	MTKS 50x50.1	0.3 ... 15 m 0.3 ... 18 m	Design: Rectangular Triple reflector size: 1.2 mm Reflective surface: 50 mm x 50 mm Material: Plastic Base material: Plastic Chemical designation of the material: PMMA8N Fastening: Through-hole mounting, Adhesive

Reflectors & reflective tapes

	Part no.	Designation	Operating range Operating range limit	Description
	50108300	REF 4-A-50x50	0.3 ... 4 m 0.3 ... 5 m	Design: Rectangular Reflective surface: 50 mm x 50 mm Material: Plastic Chemical designation of the material: PMMA Fastening: Self-adhesive
	50003192	TK 100x100	0.3 ... 24 m 0.3 ... 30 m	Design: Rectangular Triple reflector size: 4 mm Reflective surface: 96 mm x 96 mm Material: Plastic Base material: Plastic Chemical designation of the material: PMMA8N Fastening: Rear side can be glued
	50024127	TK 82.2	0.3 ... 15 m 0.3 ... 18 m	Design: Round Triple reflector size: 4 mm Reflective surface, diameter: 79 mm Material: Plastic Base material: Plastic Chemical designation of the material: PMMA8N Fastening: Through-hole mounting, Rear side can be glued
	50022816	TKS 100X100	0.3 ... 24 m 0.3 ... 30 m	Design: Rectangular Triple reflector size: 4 mm Reflective surface: 96 mm x 96 mm Material: Plastic Base material: Plastic Chemical designation of the material: PMMA8N Fastening: Through-hole mounting, Adhesive
	50081283	TKS 20X40	0.3 ... 8 m 0.3 ... 10 m	Design: Rectangular Triple reflector size: 2.3 mm Reflective surface: 16 mm x 38 mm Material: Plastic Base material: Plastic Chemical designation of the material: PMMA8N Fastening: Through-hole mounting, Adhesive
	50040820	TKS 40X60	0.3 ... 12 m 0.3 ... 15 m	Design: Rectangular Triple reflector size: 4 mm Reflective surface: 37 mm x 56 mm Material: Plastic Base material: Plastic Chemical designation of the material: PMMA8N Fastening: Through-hole mounting, Adhesive

Part number code

Part designation: **AAA46C d EE-f.GG H/i J-K**

AAA46C	**Operating principle / construction** HT46C: Diffuse reflection sensor with background suppression LS46C: Throughbeam photoelectric sensor transmitter LE46C: Throughbeam photoelectric sensor receiver PRK46C: Retro-reflective photoelectric sensor with polarization filter RK46C: Retro-reflective photoelectric sensor
d	**Light type** n/a: red light I: infrared light
EE	**Light source** n/a: LED L1: laser class 1 L2: laser class 2

Part number code

f	**Preset range (optional)** n/a: operating range acc. to data sheet xxxF: Preset range [mm]
GG	**Equipment** n/a: standard 1: 270° potentiometer 8: activation input (activation with high signal) 01: diffuse reflection sensor with background suppression (HT): HG tape (HighGain tape) is not detected from a distance of 900 mm with a set operating range of ≤ 450 mm (diffuse reflection: 6%, black) D: Depolarizing media E: Diffuse reflection sensor with background suppression (HT): optimized for dusty environments SL: Diffuse reflection sensor with background suppression (HT): slit diaphragm 25 mm x 3 mm P: throughbeam photoelectric sensor receiver (LE): edge filter for parallel operation L: Light-band XL: Extra long light spot
H	**Operating range adjustment & version** n/a with diffuse reflection sensor with background suppression (HT): range adjustment via mechanical adjusting spindle n/a with retro-reflective photoelectric sensors (PRK): operating range not adjustable 1: retro-reflective photoelectric sensors (PRK/RK): sensitivity adjustment via potentiometer 3: teach-in via button P2: resolution 2 mm
i	**Switching output/function OUT 1/IN: Pin 4 or black conductor** 2: NPN transistor output, light switching N: NPN transistor output, dark switching 4: PNP transistor output, light switching P: PNP transistor output, dark switching L: IO-Link G: Push-pull switching output, PNP dark switching, NPN light switching 6: push-pull switching output, PNP light switching, NPN dark switching
J	**Switching output / function OUT 2/IN: pin 2 or white conductor** 2: NPN transistor output, light switching N: NPN transistor output, dark switching 4: PNP transistor output, light switching P: PNP transistor output, dark switching 8: activation input (activation with high signal) 9: deactivation input (deactivation with high signal) W: warning output X: pin not used G: Push-pull switching output, PNP dark switching, NPN light switching 6: push-pull switching output, PNP light switching, NPN dark switching
K	**Electrical connection** n/a: cable, standard length 2000 mm, 4-wire 200-M12: cable, length 200 mm with M12 connector, 4-pin, axial (plug) M12: M12 connector, 4-pin (plug) 500-M12: cable, length 500 mm with M12 connector, 4-pin, axial (plug) 1000-M12: cable, length 1000 mm with M12 connector, 4-pin, axial (plug)

Note

- A list with all available device types can be found on the Leuze website at www.leuze.com.

Notes

Observe intended use!

- This product is not a safety sensor and is not intended as personnel protection.
- The product may only be put into operation by competent persons.
- Only use the product in accordance with its intended use.

Notes

For UL applications:
↳ For UL applications, use is only permitted in Class 2 circuits in accordance with the NEC (National Electric Code). ↳ These proximity switches shall be used with UL Listed Cable assemblies rated 30V, 0.5A min, in the field installation, or equivalent (categories: CYJV/CYJV7 or PVVA/PVVA7)

Further information

- Light source: Average life expectancy 100,000 h at an ambient temperature of 25 °C
- Response time: For short decay times, an ohmic load of approx. 5 kOhm is recommended
- Use in safety-relevant applications in accordance with EN ISO 13849-1:2015, e.g. muting, protective field switchover of safety laser scanners

Accessories

Connection technology - Connection cables

	Part no.	Designation	Article	Description
	50130652	KD U-M12-4A-V1-050	Connection cable	Application: Chemical resistant Connection 1: Connector, M12, Axial, Female, A-coded, 4 -pin Connector, LED: No Connection 2: Open end Shielded: No Cable length: 5,000 mm Sheathing material: PVC
	50130690	KD U-M12-4W-V1-050	Connection cable	Application: Chemical resistant Connection 1: Connector, M12, Angled, Female, A-coded, 4 -pin Connector, LED: No Connection 2: Open end Shielded: No Cable length: 5,000 mm Sheathing material: PVC

Mounting technology - Mounting brackets

	Part no.	Designation	Article	Description
	50105315	BT 46	Mounting device	Design of mounting device: Angle, L-shape Fastening, at system: Through-hole mounting Mounting bracket, at device: Screw type Type of mounting device: Rigid Material: Metal

Accessories

Mounting technology - Rod mounts

	Part no.	Designation	Article	Description
	50117252	BTU 300M-D12	Mounting system	Contains: 2x M4 x 25 screw, 2x M4 x 20 screw, 4x position washers Design of mounting device: Mounting system Fastening, at system: For 12 mm rod, Sheet-metal mounting Mounting bracket, at device: Screw type, Suited for M4 screws Type of mounting device: Clampable, Adjustable, Turning, 360° Material: Metal

Note

A list with all available accessories can be found on the Leuze website in the Download tab of the article detailed page.