Industrial Sounder, Sounder Beacon

X10 Mini, Midi & Maxi
Installation Manual

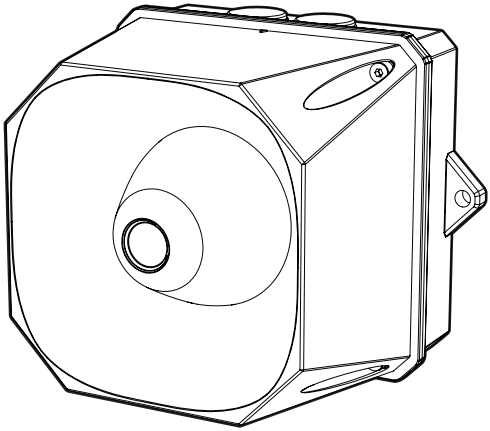

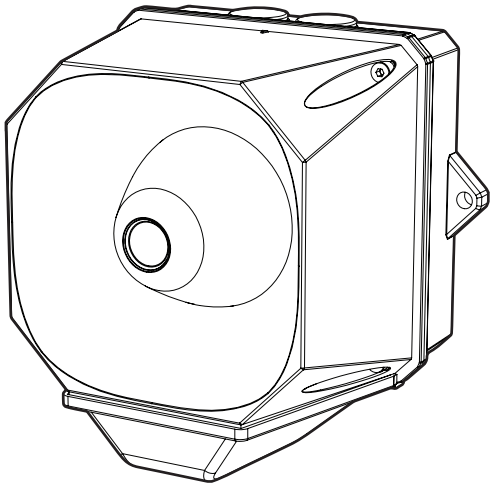

Powering Business Worldwide

Contents

Overview and purpose 3

Product assembly 4

Select wiring method 5

DIP Switch Setting 9

Reference Tables- Wiring method 11

Reference Tables- Tone characteristics 14

Reference Tables- Switch setting Vs Tone Number 18

Electrical and technical characteristics 20

Safety and 10 Year Warranty Guideline 21

⚠ WARNING

READ THIS MANUAL BEFORE YOU INSTALL THE DEVICE

DANGER! ELECTRICAL SHOCK HAZARD

DO NOT LOOK DIRECTLY AT THE BEACON

CLEAN THE DEVICE WITH A DAMP CLOTH ONLY

DO NOT PAINT ANY PART OF THE DEVICE

INSTALL BY QUALIFIED ELECTRICIAN ONLY

Product Overview

- An audible and visual alarm device that can be used as a stand-alone alarm or part of a wider alarm installation.
- The device can be installed inside or outside, in any suitable location in which ambient conditions will not exceed the specified operating temperature range and IP rating.
- The Sounder has 102 selectable tones, plus High / Low Volume control.
- The Beacon has 0.5Hz Flash, 1Hz Flash, Continuous Light and Off settings.
- The device has a selectable Time-out feature that limits the alarm duration.
- The device also has a Synchronisation feature that allows an immediate start, or a delayed start that ensures synchronization between X10 products.
- The device has two selectable modes of operation for Alarm control:

  Standard Mode = Standard tones + 3 Stage alarm
  Extended Mode = Extended tones + 4 Stage alarm

- The device is available in two power supply main variants:

  AC Mains = 115V / 230V AC supply.
  Stage control via external dry contact trigger (OV/Voltage free contacts).

  DC Low = 10V - 60V DC / 10V - 30V AC supply
  Stage control via low voltage trigger or applied power trigger.

- Ingress Protection: IP66 & IP69
- Housing has high resistance to UV discolouration

Product assembly

Sounder / beacon assembly

1. Cable entry plug (20mm) (x3)
2. Product base
3. External fixing lug (x2)
   (Maxi has 4 supplementary internal fixing)
4. Horn
5. Captive fastening (x4)
6. Beacon Lens
7. Lens Fastener, 1/4 turn (Mini, Midi)
8. 4x Screws (Maxi only)

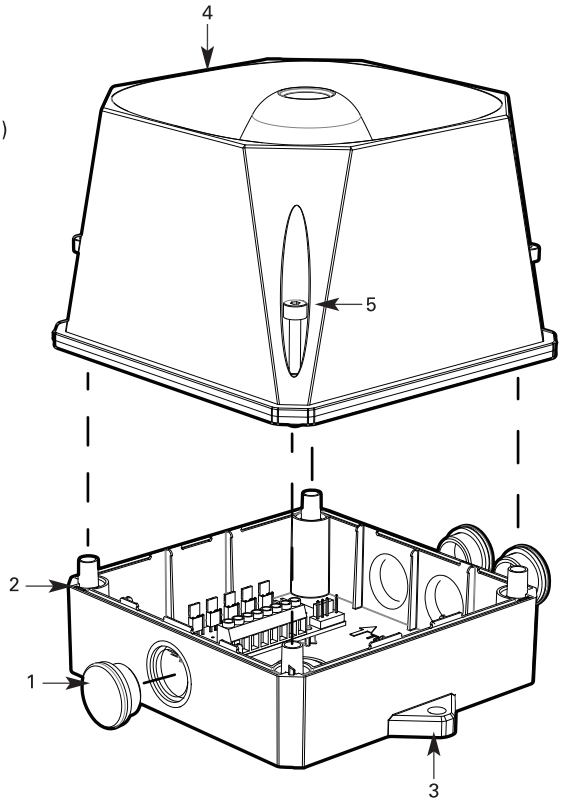

Mini, Midi

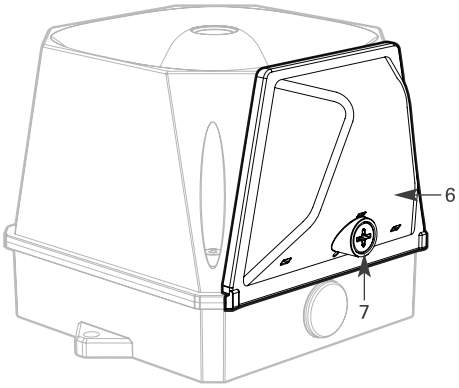

Maxi

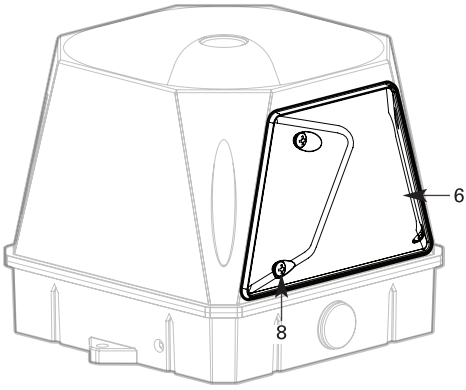

Wiring method

X10
115V/230V AC

Select Voltage

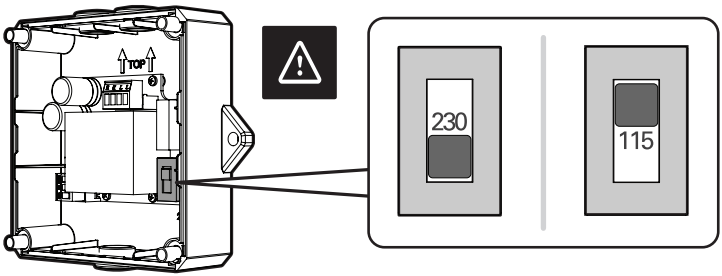

Wiring Method

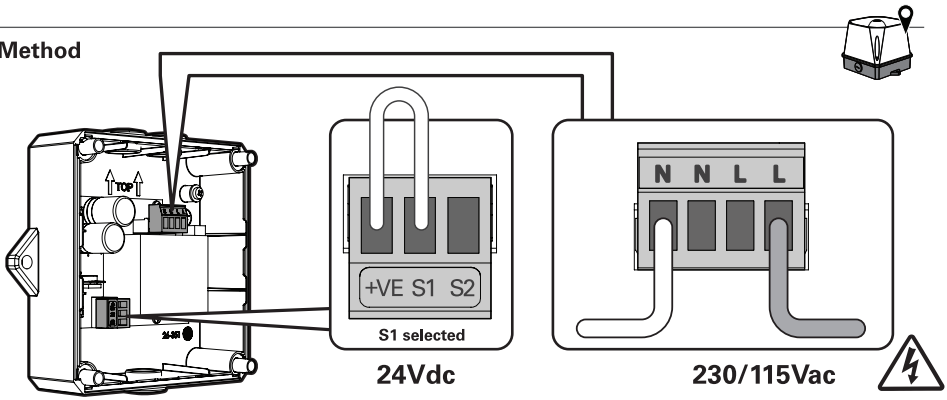

115V/230 V AC

Note: Important referal to page 9 for stage selection

AC Mains stage control

Wiring Information		Stage Selected	
Control lines		MODE Switch (see page 9)	
S1	S2	Standard	Extended
		STANDBY	STAGE 1
●		STAGE 1	STAGE 2
	●	STAGE 2	STAGE 3
●	●	STAGE 3	STAGE 4

⚠ WARNING

A readily available disconnect/isolation device shall be incorporated external to the equipment. (The device should be isolated from the mains supply prior to removing the horn or beacon lens for installation or maintenance access)

Suitable over current protection should be provided by the building installation

Suitable mains cable = >100mA
-40c to +85c

X10
115V/230V AC

Earth Termination / Loop

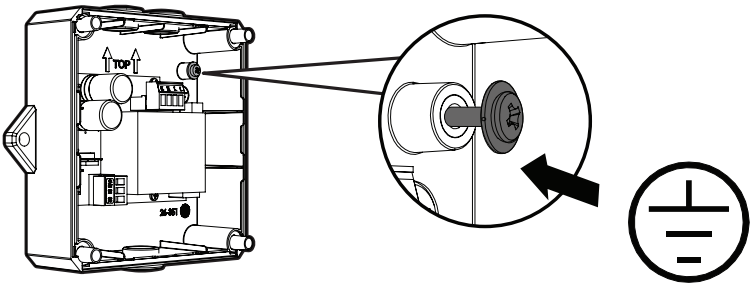

Set DIP Switches

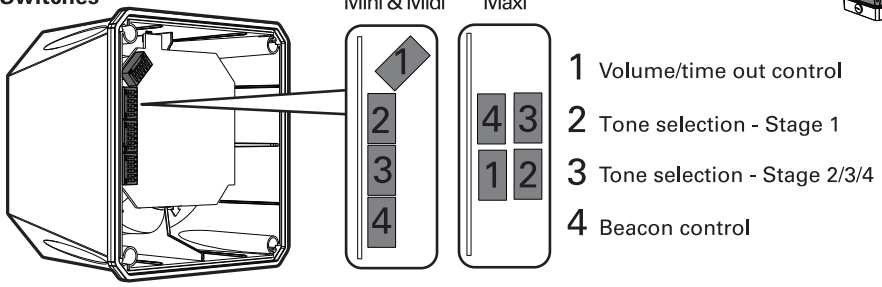

1 Volume/time out control
2 Tone selection - Stage 1
3 Tone selection - Stage 2/3/4
4 Beacon control

REFER TO PAGES 9 & 10 FOR SETTINGS

Continue to page 8

X10
10-60V DC / 10-30 AC

Configure Jumpers

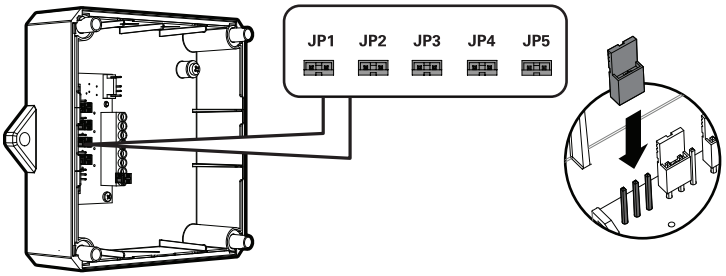

REFER TO PAGES 11 & 12 FOR JUMPER CONFIG SETTINGS

Wiring Method

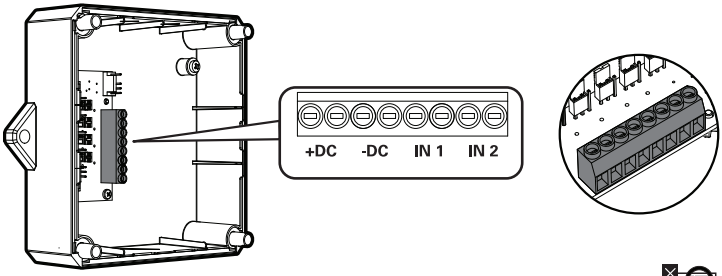

REFER TO PAGES 11 & 12 FOR STAGE CONTROL WIRING

Set DIP Switches

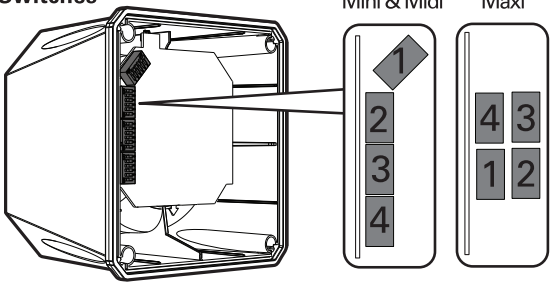

1 Volume/time out control

2 Tone selection - Stage 1

3 Tone selection - Stage 2/3/4

4 Beacon control

REFER TO PAGES 9 & 10 FOR SWITCH SETTINGS

X10
115V/230V AC / 10-60V DC / 10-30V AC

Connect Horn Cable to Base Connector

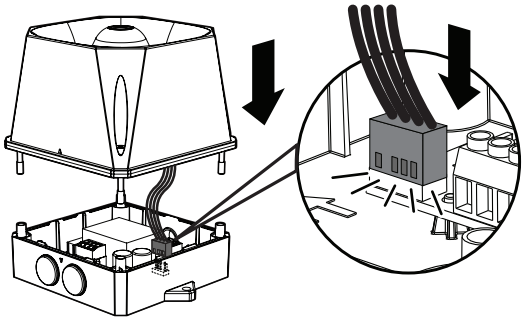

Tighten Fasteners

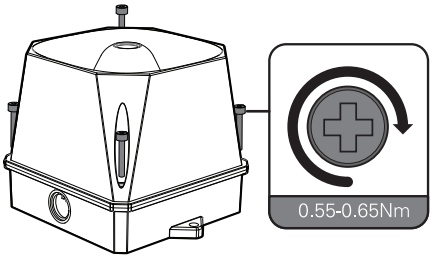

Install Beacon Lens - Mini, Midi

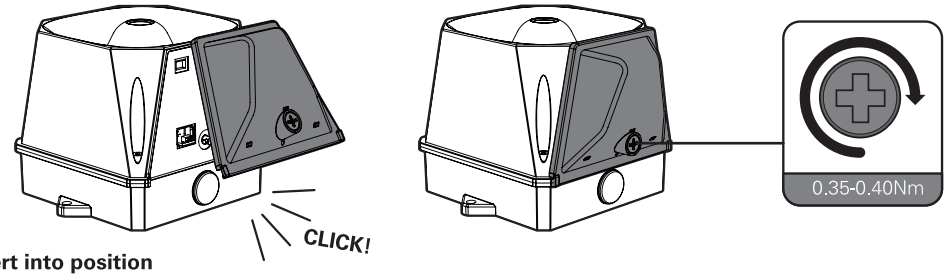

Insert into position

Install Beacon Lens - Maxi

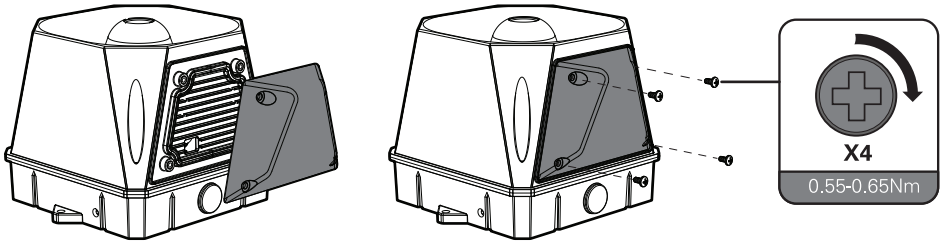

Insert into position

TO PREVENT DAMAGE TO THE ELECTRONICS, THE PRODUCT SHOULD BE ISOLATED FROM THE SUPPLY FOR AT LEAST 20 MINUTES BEFORE REMOVING/REPLACING THE BEACON LENS.

DIP Switch Setting

SWITCH 1 Advanced Settings

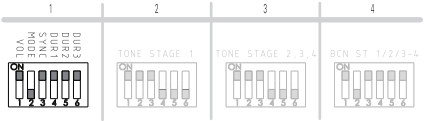

Volume control (1)

ON = Max Volume
OFF = -10dB(A)

Stage mode selection (2)

ON = Extended tones + 4 stage alarm control

OFF = Standard tones + 3 stage alarm control

Synchronisation (3)

OFF = Immediate start

ON = Delayed start to ensure synchronisation with X10 products

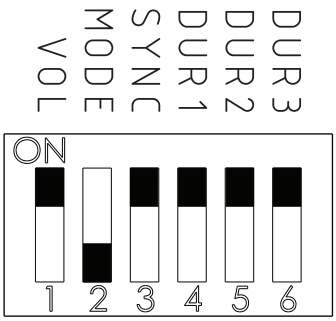

Time-out settings
Alarm Duration (4-6)



SWITCH 2 Stage Tone

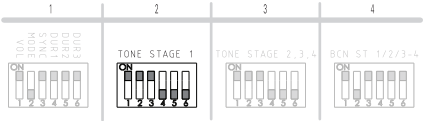

Tone selection switch

This DIP switch controls for STAGE 1 only.

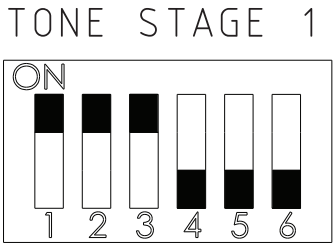

REFER TO TONE TABLE ON PAGE 18
FOR FURTHER SETTINGS

DIP Switch Setting Cont.

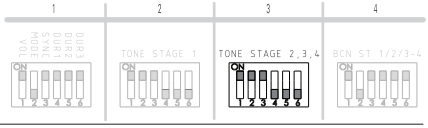

SWITCH 3 Stage 2/3/4 Tone

Tone selection switch

The DIP switch controls the tone for STAGE 2, 3, 4

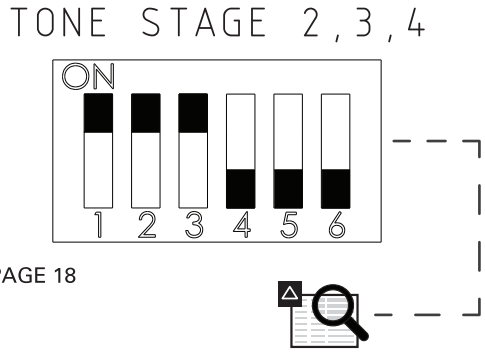

REFER TO TONE TABLE ON PAGE 18
FOR FURTHER SETTINGS

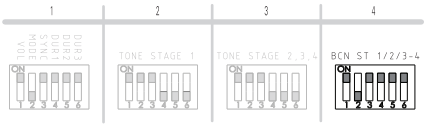

SWITCH 4 Beacon Pattern

Beacon switch

There is a choice of four beacon settings which can be selected independently for each alarm stage. Select the desired DIP switch combination for each stage.

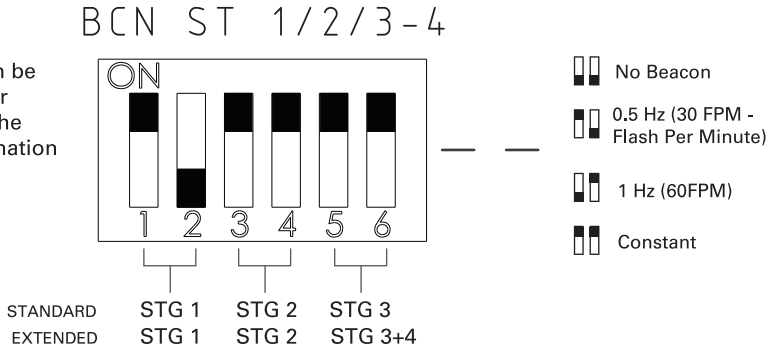

Stage Control Wiring

10V-60V DC

1. Stage select via low voltage trigger

Trigger Current = 1mA @ 10V
6mA @ 60V

* Do not exceed10V- 60V DC (10V-30V AC) between Stage control trigger (IN1 / IN2) and Power (+DC/-DC)

Standard Mode

Wiring Configurations

Stage	+DC	-DC	IN 1	IN 2
Stage 1 alarm	+	-	●	
Stage 2 alarm	+	-		●
Stage 3 alarm	+	-	●	●

Jumper Configurations

Positive Trigger (+)

JP1	JP2	JP3	JP4	JP5
				

Negative Trigger (-)

JP1	JP2	JP3	JP4	JP5
				

Extended Mode

Wiring Configurations

Stage	+DC	-DC	IN 1	IN 2
Stage 1 alarm	+	-		
Stage 2 alarm	+	-	●	
Stage 3 alarm	+	-		●
Stage 4 alarm	+	-	●	●

Positive Trigger (+)

JP1	JP2	JP3	JP4	JP5
				

Negative Trigger (-)

JP1	JP2	JP3	JP4	JP5
				

2. Stage select via '-' supply

Standard Mode

Wiring Configurations

Stage	+DC	-DC	IN 1	IN 2
Stage 1 alarm	+		-	
Stage 2 alarm	+			-
Stage 3 alarm	+		-	-

Jumper Configurations

JP1	JP2	JP3	JP4	JP5
				

Extended Mode

Wiring Configurations

Stage	+DC	-DC	IN 1	IN 2
Stage 1 alarm	+	-		
Stage 2 alarm	+		-	
Stage 3 alarm	+			-
Stage 4 alarm	+		-	-

Jumper Configurations

JP1	JP2	JP3	JP4	JP5
				

Stage Control Wiring

10V-60V DC

3. Stage select via + supply

Standard Mode

Wiring Configurations

Stage	+DC	-DC	IN 1	IN 2
Stage 1 alarm		-	+	
Stage 2 alarm		-		+
Stage 3 alarm		-	+	+

Jumper Configurations

JP1	JP2	JP3	JP4	JP5
				

Extended Mode

Wiring Configurations

Stage	+DC	-DC	IN 1	IN 2
Stage 1 alarm	+	-		
Stage 2 alarm		-	+	
Stage 3 alarm		-		+
Stage 4 alarm		-	+	+

Jumper Configurations

JP1	JP2	JP3	JP4	JP5
				

4. Stage select via reverse polarity

Extended Mode

Wiring Configurations

Stage	+DC	-DC	IN 1	IN 2
Stage 1 alarm	+	-		
Stage 4 alarm	-	+		

Jumper Configurations

JP1	JP2	JP3	JP4	JP5
				

Stage Control Wiring

10V-30V AC

5. Stage select via Low Voltage AC

Standard Mode

Wiring Configurations

Stage	+DC	-DC	IN 1	IN 2
Stage 1 alarm		N	L	
Stage 2 alarm		N		L
Stage 3 alarm		N	L	L

Jumper Configurations

JP1	JP2	JP3	JP4	JP5
				

Extended Mode

Wiring Configurations

Stage	+DC	-DC	IN 1	IN 2
Stage 1 alarm	L	N		
Stage 2 alarm		N	L	
Stage 3 alarm		N		L
Stage 4 alarm		N	L	L

Jumper Configurations

JP1	JP2	JP3	JP4	JP5
				

Tone characteristics

				SPL		
Tone	**Frequency (Hz)**	**Description**	**Pattern**	**Mini**	**Midi**	**Maxi**
1	800 & 970	2Hz (250ms-250ms), BS Fire tone		100	108	120
2	800 to 970	7Hz (7/s), BS Fire tone		101	108	118
3	800 to 970	1Hz (1/s), BS Fire tone		102	108	119
4	2850	Steady, General purpose		101	108	117
5	2400 to 2850	7Hz, General purpose		100	109	117
6	2400 to 2850	1Hz, General purpose		101	109	118
7	500 to 1200	3.5s sweep, 0.5 s silence, then repeat, Dutch tone (NEN 2575) Slow whoop		99	110	118
8	1200 to 500	1Hz, Din tone (33404-3 PFEER TAP)		99	108	118
9	2400 & 2850	2Hz (250ms-250ms), General purpose		101	109	118
10	970	0.5Hz (1s On / 1s Off), PFEER alert		100	108	119
11	800 & 970	1Hz (500ms-500ms), BS Fire tone		100	108	119
12	2850	0.5Hz (1s On / 1s Off), General purpose		100	108	118
13	970	0.8Hz (250ms On / 1s Off), General purpose	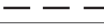	101	107	118
14	970	Steady, PFEER -Toxic gas		100	108	119
15	554 & 440	100ms-400ms, France NFS 32 S 32-001		102	106	118
16	660	3.3Hz (150ms On/150msOff), Swedish (Air raid)		100	106	118
17	660	0.28Hz (1.8s On / 1.8s Off), Swedish (Local warning)		101	107	118
18	660	0.05Hz (6.5s On / 13s Off), Swedish (Pre-mess)		101	107	118
19	660	Steady, Swedish (All clear)		101	107	118
20	554 & 440	0.5Hz (1s - 1s), Swedish (Turn out)	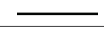	103	107	118
21	660	1Hz (500ms-500ms), Swedish		100	107	118
22	2850	4Hz (150ms On / 100ms Off), BS Fire tone	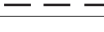	101	108	118
23	800 to 970	50Hz, General purpose		100	107	119
24	2400 to 2850	50Hz, General purpose		99	108	116
25	970	3 x 500ms pulses, 1.5s silence, then repeat, ISO 8201/Australia/US Temporal		100	108	120
26	800 to 970	3 x 500ms pulsed sweep, 1.5s silence, then repeat, ISO 8201/Australia		102	108	118

Tone characteristics

				SPL		
Tone	**Frequency (Hz)**	**Description**	**Pattern**	**Mini**	**Midi**	**Maxi**
27	970 & 800	3 x 500ms 2Tone pulse, 1.5s silence,	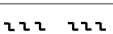	100	107	118
28	800 & 970	2Hz (250ms-250ms), BS Fire tone	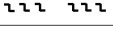	100	108	118
29	990 & 650	2Hz (250ms-250ms) (Symphoni tones), BS Fire tone		102	108	119
30	510 & 610	2Hz (250ms-250ms) (Squashni Micro tones), BS Fire tone		102	106	117
31	300 to 1200	1Hz, General purpose	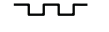	98	109	121
32	510 & 610	1Hz (500mS-500mS), General purpose/ BS Fire tone		102	105	117
33	Bell	Steady, Bell General purpose		100	106	119
34	Bell	3 x 500ms pulses followed by 1.5s silence then repeat, Bell / US temporal		101	106	119
35	1000 & 2000	1Hz (500ms-500ms) Singapore		100	110	119
36	420	6 step ramped start pulsed @ 0.625S ON / 0.625S OFF, Australian alert		102	105	118
37	500 to 1200	Sweep 3.75s followed by 0.25s gap, Australian evac AS2220		102	111	119
38	1400 to 1600 to 1400	Sweep UP 1s, sweep DOWN 0.5s, NF C 48-265		102	108	120
39	500 to 1200 to 500	Sweep UP 1.5s, sweep DOWN 1.5s, Siren		102	109	120
40	720	0.7s ON, 0.3OFF, German ind alarm		101	109	118
41	422 to 775	Sweep for 0.85s, 1s delay, repeat, NFPA Whoop		100	107	119
42	470	Steady, Horn (USA)		100	105	118
43	370	Steady, Air horn (USA)		101	105	117
44	4000	Steady		98	105	114
45	4000	0.5Hz (1s On/1s Off),		98	105	115
46	500 to 1200	Rise from 500 to 1200 over 5s then remain at 1200,		99	111	119
47	554	Steady		102	105	118
48	2850	3 x 500ms pulses 1 5s silence then repeat, ISO 8201		102	109	118
49	700 to 900	0.3s sweep, 0.6s silence, then repeat,		100	107	118
50	500 to 1200	3 x 500ms pulsed sweep, 1.5s silence, then repeat, ISO 8201/Australia		102	108	119
51	500 to 2400	Rise from 500 to 2400 over 3s then remain at 2400		101	109	121

Tone characteristics

				SPL		
Tone	**Frequency (Hz)**	**Description**	**Pattern**	**Mini**	**Midi**	**Maxi**
52	300 to 1200	Rise from 300 to 1200 over 3s then remain at 1200,		100	110	121
53	300 to 800	Rise from 300 to 800 over 3s then remain at 800,		100	108	119
54	150 to 1000	150 to 1000 over 10s, 1000 for 40s, 1000 to 150 over 10s, stop, Industrial alarm (Germany)		100	109	121
55	2400 to 2900	Sweep UP 0.5s, sweep DOWN 0.5s,		101	109	119
56	2400 to 2900	Sweep UP 0.07s, sweep DOWN 0.07s,		100	108	117
57	800 to 1000	Sweep UP 0.5s, sweep DOWN 0.5s,		102	108	121
58	800 to 1000	Sweep UP 0.07s, sweep DOWN 0.07s,		101	107	120
59	700 to 1500	Sweep UP 1.5s, sweep DOWN 1.5s,		100	110	120
60	500 to 1200	Sweep UP 1s, sweep DOWN 1s, IMO 3d, Germany, KTA3901 evacuation		99	110	119
61	500 to 1200	Sweep UP 3s, sweep DOWN 3s,		99	111	122
62	500 to 1500	Sweep UP 7s, sweep DOWN 7s, Finland general alarm		99	111	121
63	2400	Steady		99	108	116
64	2000	Steady		98	111	121
65	1500	Steady		100	108	119
66	1200	Steady		98	110	117
67	1000	Steady, PFEER (Gas alarm)		100	109	118
68	950	Steady, UK BS5839-1		101	108	119
69	880	Steady		102	106	118
70	825	Steady, EN54-3		99	106	120
71	800	Steady		98	107	120
72	725	Steady		100	109	117
73	500	Steady		98	105	120
74	440	Steady		99	104	118
75	340	Steady		100	103	116
76	2400	1Hz (0.5s On / 0.5s Off),		102	108	118
77	1000	1Hz (0.5s On / 0.5s Off), PFEER (general alarm), UK BS5839-1 (back-up alarm)		100	109	118
78	1000	0.5Hz (1s On / 1s Off), PFEER (general alarm)		100	109	121

Tone characteristics

Tone	Frequency (Hz)	Description	Pattern	SPL Mini	SPL Midi	SPL Maxi
79	950	0.5Hz (1s On / 1s Off),	— — —	102	108	118
80	825	1Hz (0.5s On / 0.5s Off),	— — —	99	106	120
81	800	2Hz (0.25s On / 0.25s Off),	— — —	99	106	119
82	800	0.25s On / 1s Off,	– – –	99	106	119
83	125	Steady, Electromechanical horn	———	97	99	112
84	725	1Hz (0.7s On / 0.3s Off),	— — —	100	109	120
85	700	4Hz (0.125s On / 0.125s Off), Sweden SS031711 (imminent danger)	— — —	100	107	117
86	680	0.875s On / 0.875s Off Industrial Alarm (Germany)	— — —	101	107	119
87	500	1Hz (0.25s On / 0.75s Off), Germany KTA3901 (evacuation)	– – –	98	104	118
88	470	3 x 500ms pulses, 1.5s silence, then repeat, ISO 8201	--- ---	99	104	118
89	950	3 x 500ms pulses 1.5s silence then repeat, ISO 8201	--- ---	101	108	118
90	950	1x2s pulse, 0.5s silence, 1x0.5s pulse, 1s silence - repeat, IMO (Telefon Call)	—- —-	101	108	120
91	950	1x1s pulse, 1s silence, 1x3s pulse, 1s silence - repeat, IMO (abandon ship)	—- —-	101	108	120
92	825	825 7x(2.5s pulse,2.5s silence), 7s pulse, 2.5s silence - repeat, IMO SOLAS III/50 + SOLAS III/6.4 (general alarm)	-------—	99	106	120
93	1200 & 1400	(0.015625s / 0.015625s),	⊓⊔⊓⊔	101	109	118
94	825 & 1025	2Hz (0.25s / 0.25s),	⊓⊔⊓⊔	99	108	119
95	800 & 1000	1Hz (0.5s / 0.5s), UK BS5839-1 (Fire alarm)	⊓⊔⊓⊔	100	108	119
96	800 & 1000	2Hz (0.25s / 0.25s), UK BS5839-1 (Fire alarm, Level crossing)	⊓⊔⊓⊔	100	108	118
97	800 & 1000	4Hz (0.125s / 0.125s), UK BS5839-1 (Fire alarm, Increased urgency Level crossing)	⊓⊔⊓⊔	100	107	118
98	500 & 900	2Hz (0.25s / 0.25s),	⊓⊔⊓⊔	101	106	118
99	440 & 660	4Hz (0.125s / 0.125s), Germany Industrial Alarm	⊓⊔⊓⊔	99	106	119
100	440 & 650	0.5Hz (1s / 1s)	⊓⊔⊓⊔	101	105	118
101	554 & 440	1Hz (0.5s - 0.5s), Swedish (Turn out)	⊓⊔⊓⊔	103	105	119
102	800 & 650	800 0.25s pulse, 0.25s silence, 650 0.25s pulse,2s silence - repeat	-_ -_ -_	100	106	119

Tone select switch settings

DIP SWITCH SETTINGS						STANDARD TONES			EXTENDED TONES			
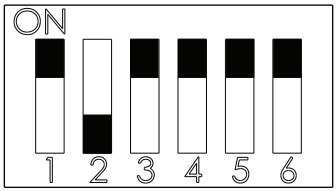						STG 1	STG 2	STG 3	STG 1	STG 2	STG 3	STG 4
						DIP switch select	DIP switch select	Set tone	DIP switch select	DIP switch select	Set tone	Set tone
ON	ON	ON	ON	ON	ON	1	1	14	Silent	8	79	68
ON	ON	ON	ON	ON	OFF	2	2	14	8	94	89	68
ON	ON	ON	ON	OFF	ON	3	3	14	8	54	86	83
ON	ON	ON	ON	OFF	OFF	4	4	14	8	71	96	89
ON	ON	ON	OFF	ON	ON	5	5	4	3	68	23	77
ON	ON	ON	OFF	ON	OFF	6	6	4	7	96	63	89
ON	ON	ON	OFF	OFF	ON	7	7	14	37	36	63	67
ON	ON	ON	OFF	OFF	OFF	8	8	14	41	88	68	42
ON	ON	OFF	ON	ON	ON	9	9	4	50	37	36	42
ON	ON	OFF	ON	ON	OFF	10	10	14	51	96	63	89
ON	ON	OFF	ON	OFF	ON	11	11	14	52	96	63	96
ON	ON	OFF	ON	OFF	OFF	12	12	4	53	96	63	82
ON	ON	OFF	OFF	ON	ON	13	13	14	54	8	86	83
ON	ON	OFF	OFF	ON	OFF	14	14	1	55	9	63	82
ON	ON	OFF	OFF	OFF	ON	15	15	14	24	58	63	71
ON	ON	OFF	OFF	OFF	OFF	16	16	19	56	55	63	76
ON	OFF	ON	ON	ON	ON	17	17	19	38	96	63	68
ON	OFF	ON	ON	ON	OFF	18	18	19	57	56	63	58
ON	OFF	ON	ON	OFF	ON	19	19	1	23	58	63	83
ON	OFF	ON	ON	OFF	OFF	20	20	19	58	55	63	33
ON	OFF	ON	OFF	ON	ON	21	21	14	59	15	73	68
ON	OFF	ON	OFF	ON	OFF	22	22	14	39	96	63	81
ON	OFF	ON	OFF	OFF	ON	23	23	14	61	8	68	83
ON	OFF	ON	OFF	OFF	OFF	24	24	4	63	7	19	77
ON	OFF	OFF	ON	ON	ON	25	25	14	65	62	65	96
ON	OFF	OFF	ON	ON	OFF	26	26	14	66	96	63	94
ON	OFF	OFF	ON	OFF	ON	27	27	14	67	77	58	57
ON	OFF	OFF	ON	OFF	OFF	28	28	10	69	99	69	18
ON	OFF	OFF	OFF	ON	ON	29	29	*988Hz	70	96	63	93
ON	OFF	OFF	OFF	ON	OFF	30	30	*510Hz	19	96	63	83
ON	OFF	OFF	OFF	OFF	ON	31	31	14	47	33	63	87
ON	OFF	OFF	OFF	OFF	OFF	32	32	*510Hz	74	96	63	33

Tone select switch settings (cont.)

DIP SWITCH SETTINGS						STANDARD TONES			EXTENDED TONES			
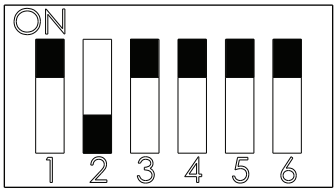						STG 1	STG 2	STG 3	STG 1	STG 2	STG 3	STG 4
						DIP switch select	DIP switch select	Set tone	DIP switch select	DIP switch select	Set tone	Set tone
OFF	ON	ON	ON	ON	ON	33	33	3	75	96	63	83
OFF	ON	ON	ON	ON	OFF	34	34	14	76	71	63	6
OFF	ON	ON	ON	OFF	ON	35	35	4	77	96	63	78
OFF	ON	ON	ON	OFF	OFF	36	36	14	78	67	8	77
OFF	ON	ON	OFF	ON	ON	37	37	14	79	8	68	94
OFF	ON	ON	OFF	ON	OFF	38	38	14	80	96	63	93
OFF	ON	ON	OFF	OFF	ON	39	39	14	81	56	63	33
OFF	ON	ON	OFF	OFF	OFF	40	40	14	82	57	63	68
OFF	ON	OFF	ON	ON	ON	41	41	14	83	8	94	68
OFF	ON	OFF	ON	ON	OFF	42	42	3	84	8	72	83
OFF	ON	OFF	ON	OFF	ON	43	43	3	86	96	63	93
OFF	ON	OFF	ON	OFF	OFF	44	44	6	18	85	21	19
OFF	ON	OFF	OFF	ON	ON	45	45	44	17	96	19	20
OFF	ON	OFF	OFF	ON	OFF	46	46	38	16	17	19	18
OFF	ON	OFF	OFF	OFF	ON	47	47	15	36	37	63	50
OFF	ON	OFF	OFF	OFF	OFF	48	48	14	33	96	71	81
OFF	OFF	ON	ON	ON	ON				89	8	68	94
OFF	OFF	ON	ON	ON	OFF				48	63	9	16
OFF	OFF	ON	ON	OFF	ON				90	92	91	60
OFF	OFF	ON	ON	OFF	OFF				91	92	83	93
OFF	OFF	ON	OFF	ON	ON				92	83	91	93
OFF	OFF	ON	OFF	ON	OFF				9	55	63	76
OFF	OFF	ON	OFF	OFF	ON				35	64	78	8
OFF	OFF	ON	OFF	OFF	OFF				95	8	87	73
OFF	OFF	OFF	ON	ON	ON				96	8	89	68
OFF	OFF	OFF	ON	ON	OFF				97	37	67	36
OFF	OFF	OFF	ON	OFF	ON				98	8	65	79
OFF	OFF	OFF	ON	OFF	OFF				99	69	83	57
OFF	OFF	OFF	OFF	ON	ON				100	33	71	8
OFF	OFF	OFF	OFF	ON	OFF				15	38	73	68
OFF	OFF	OFF	OFF	OFF	ON				101	96	63	82
OFF	OFF	OFF	OFF	OFF	OFF				102	33	71	49

*Test tone for internal verification

Electrical and technical characteristics

Electrical data

Rated voltage

AC Mains Product 115v/ 230v AC

DC Low voltage Product 10v-60v DC/ 10-30v AC

Technical data

Sound pressure level (Max Volume*)	Mini = 100db Midi = 110db Maxi = 120db

*Dependent on tone

MINI

Tone	Volume	Beacon Mode	10V dc		24V dc		60V dc	
			Surge Current (pk)	Operating Current (av)	Surge Current (pk)	Operating Current (av)	Surge Current (pk)	Operating Current (av)
Tone 8 -Sweep DIN tone	High	Continuous	305 mA	215 mA	140 mA	90 mA	80 mA	45 mA
		1Hz Flash	220 mA	130 mA	90 mA	60 mA	45 mA	35 mA
		0.5Hz Flash	140 mA	85 mA	60 mA	40 mA	35 mA	25 mA
		OFF	95 mA	35 mA	45 mA	25 mA	40 mA	20 mA

Tone	Volume	Beacon Mode	115V AC	230V AC
Tone 8 -Sweep DIN tone	High	Continuous	73.5 mA	34 mA
		1Hz Flash	73 mA	33.5 mA
		0.5Hz Flash	72.5 mA	33 mA
		OFF	72 mA	32.5 mA

MIDI

Tone	Volume	Beacon Mode	10V dc		24V dc		60V dc	
			Surge Current (pk)	Operating Current (av)	Surge Current (pk)	Operating Current (av)	Surge Current (pk)	Operating Current (av)
Tone 8 -Sweep DIN tone	High	Continuous	495 mA	285 mA	210 mA	120 mA	110 mA	65 mA
		1Hz Flash	385 mA	200 mA	150 mA	80 mA	65 mA	45 mA
		0.5Hz Flash	310 mA	155 mA	120 mA	55 mA	60 mA	40 mA
		OFF	280 mA	100 mA	130 mA	45 mA	70 mA	35 mA

Tone	Volume	Beacon Mode	115V AC	230V AC
Tone 8 -Sweep DIN tone	High	Continuous	74 mA	36.5 mA
		1Hz Flash	71 mA	35 mA
		0.5Hz Flash	70 mA	34.5 mA
		OFF	69 mA	34 mA

MAXI

Tone	Volume	Beacon Mode	10V dc		24V dc		60V dc	
			Surge Current (pk)	Operating Current (av)	Surge Current (pk)	Operating Current (av)	Surge Current (pk)	Operating Current (av)
Tone 8 -Sweep DIN tone	High	Continuous	3730 mA	1865 mA	1525 mA	620 mA	630 mA	265 mA
		1Hz Flash	3730 mA	1725 mA	1525 mA	585 mA	250 mA	250 mA
		0.5Hz Flash	3730 mA	1685 mA	1525 mA	555 mA	240 mA	240 mA
		OFF	3645 mA	1600 mA	1440 mA	550 mA	235 mA	235 mA

Tone	Volume	Beacon Mode	115V AC	230V AC
Tone 8 -Sweep DIN tone	High	Continuous	174 mA	89 mA
		1Hz Flash	168 mA	87 mA
		0.5Hz Flash	162 mA	86 mA
		OFF	160 mA	83 mA

Volume range	10dB +/- via DIP switch
Alarm tones	Selected by DIP switch, see Reference Tables

Physical data

Operating temperature range	-30°c to +70°c	**Time out Alarm duration**	5, 10, 15, 20, 25, 30 and 40 minutes switch selectable.
Weight	Mini 840g, Midi 960g, Maxi 1300g	**Beacon settings**	0.5Hz (30FPM), 1Hz (60FPM) Continuous, Off
Cable gland size	M20	**Storage temperature range**	-40°C to +70°C
Cable size	0.5 - 2.5mm^2	**Relative humidity**	98% ±2%

Conformity standards

Protection class **EU low voltage** **Class construction**	IP66, IP69, IK08 Class II	
IEC standards	EN61000-6-2:2005 EN61000-6-4:2007 and A1:2011	LVD (EN60950)
WEEE Waste Electrical and Electronic Equipment Directive (UK)		
RoHS Restriction of Hazardous Substance Directive		

Safety and 10 year warranty statement

Ingress

The product should be mounted horizontally on a suitable secure vertical surface.
Volume of water no more than 100 litres per minute
Pressure of water no more than 100 bar

Foreign Object Debris Impact

It is recommended that a protective cage or housing is used in instances where impact from foreign debris is probable at temperatures < 10°.

⚠ WARNING

Operating temperature range

For ambient temperatures exceeding 50°c, the continuous operating time of the product must not exceed the 'Max Operating Time' limits specified in the chart below. A minimum cool down period of 1 hour must also be applied between cycles of operation.

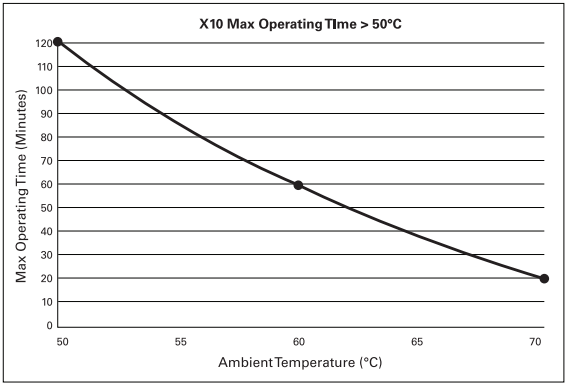

Failure to comply with these guidelines will void the manufacturer's Warranty. Eaton Extended 10 year Warranty Policy and Terms are available at our website.

Manufactured By

Eaton Electrical Systems Ltd.
Llantarnam Park, Cwmbran, Gwent,
NP44 3AW, UK
Tel: +44 (0)1633 628 500
Fax:+44 (0)1633 866 346
www.cooperfulleon.com
www.eaton.com

Eaton Industries Manufacturing GmbH
Electrical Sector EMEA
Route de la Longeraie 7
1110 Morges, Switzerland
Eaton.eu

© 2019 Eaton All rights reserved

EATON
Powering Business Worldwide

CE