Technical Data **PR216-219-508-01**

Installation and user manual for the BiWire / Conventional Repeater Panel

EFBWCV-REPEATER

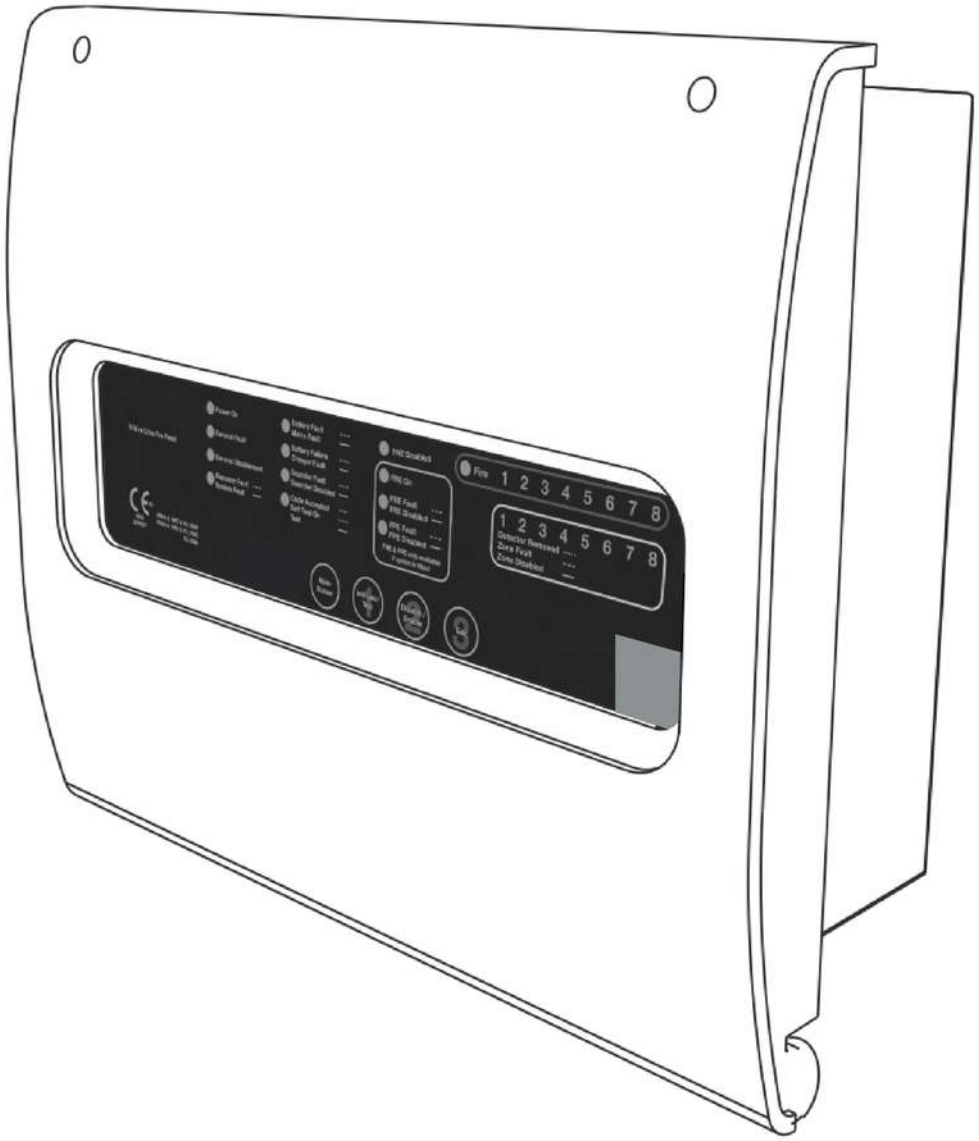

Powering Business Worldwide

Contents

Introduction 3
Purpose 3
The BiWire / Conventional Repeater Panel 3
Indication Equipment (IE) 3
Power Supply Equipment (PSE) 4
System Wiring 5
Status Indications 5
Repeater I/O 7
Installation Instructions 8
Before you begin 8
Panel Installation 9
Installation Testing 14
Operating Instructions 15
Multi-Function Buttons 15
Mute Buzzer 15
Lamp Test 15
Technical Specification 16
Panel Specification 16
PSE Specification 16
Manufacturers Contact Details 17

Introduction

Purpose

This manual is intended as a guide for the installation and commissioning of the BiWire / Conventional Repeater panel. The content of this guide is intended to assist the user to install a fire alarm system and does not specify the detailed design of the product. The guide assumes a reasonable level of competency with this type of system.

The installation of this system can only be carried out by a competent person with relevant current training and experience, with access to requisite tools, equipment and information (as stipulated by BS5839).

The design has been carried out in accordance with a quality management system, which incorporates a set of rules for the design of all elements of the Indication Equipment (IE) and Power Supply Equipment (PSE).

The components of the IE and PSE have been selected for the intended purpose, and are expected to operate within their specification when the environmental conditions outside the cabinet of the IE / PSE comply with class 3k5 of EN 60721-3-3:1995.

The BiWire/Conventional Repeater Panel

The BiWire/Conventional Repeater Panel mimics the visual and audible indications of the Fire panel it is connected to. This is a purely passive repeater panel so it is not possible to send instructions to the Fire panel to perform actions such as Sound Alarms, Silence Alarms, or Reset. Each repeater panel comes with an integral power supply and battery backup so there is no power requirements from the main Fire panel.

Indication Equipment (IE)

The panel enclosure is constructed from PC ABS components. The front cover is hinged at the bottom and is secured at the top of the panel by two retaining screws. On the in-side of the panel a sliding PCB tray makes it easy to remove the tray without touching the PCB. The back box houses the PSE, the stand-by batteries and has 29 x 20mm cable access points. Terminal blocks are positioned to enable ease of connection. Figure 1 shows the dimensions of the panel.

Figure 1. BiWire/Coventional Repeater Panel Dimensions

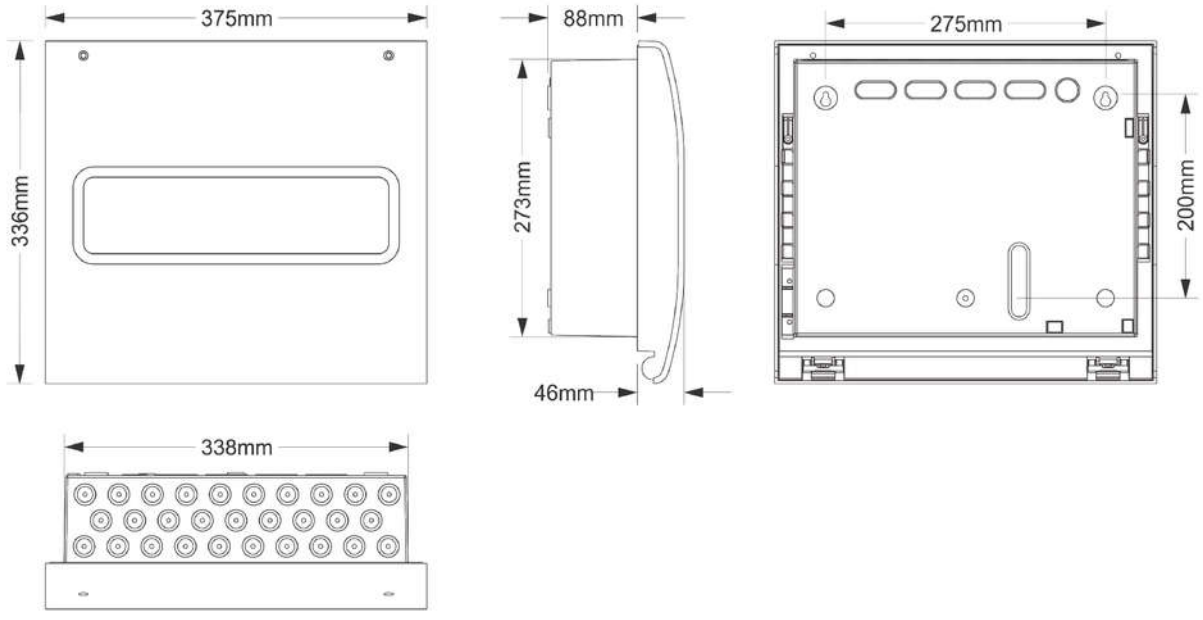

Power Supply Equipment (PSE)

The PSE has been specifically designed to operate the panel and may not be substituted for any other power source. The PSE is a Switch Mode Power Supply located within the cabinet as shown below. A dedicated 230V AC mains supply is required as the primary source; the supply is fused on the PCB by a 10 amp anti-surge fuse. In the event of mains failure the PSE will automatically switched over to the standby battery power source until the main power source is restored.

The PSE maintains the charge for the two 12V 5Ah sealed lead acid batteries in a fully charged state. On initial power up the batteries will charge over a 24 hour period. Dependent on the charge of the installed battery the system may initially show a charger or battery fault.

The supply should be clearly labelled 'FIRE ALARM: DO NOT SWITCH OFF' at all isolation points.

PSE faults originating from the following are indicated by the panel using a dedicated repeater power fault indicator:

- The loss of either power source
- Failure of the charger circuit
- High internal resistance of the battery

Figure 2 shows the location of the power supply. "PSE Specification" on page 16 provides a full technical specification for the power supply.

Note that the charging circuit will be in its high impedance state (approximately 3V DC) if no batteries, faulty batteries, or only one battery is connected. The full 27V DC (nominal) charging voltage should be present if the correct batteries are connected.

In order to test for correct operation of the batteries, remove the mains 230V AC fuse and allow the batteries to settle from their charging voltage for approximately 5 minutes. The battery voltage should then be measured using an electronic test meter and a voltage greater than 24V DC should be present.

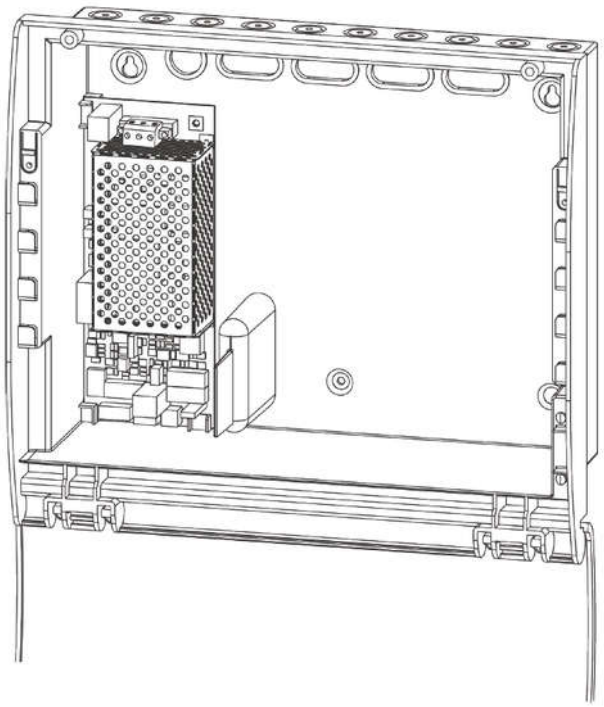

Figure 2. Power Supply Equipment

BATTERY DISPOSAL INSTRUCTIONS

⚠ WARNING

RISK OF EXPLOSION IF BATTERY IS REPLACED BY AN INCORRECT TYPE

This product contains batteries and they must be disposed of in accordance with current waste disposal and pollution legislation and in particular The Environmental Protection Act 1990, Special Waste Regulation 1996. It is recommended that the following authorities are contacted before any attempt is made to dispose of batteries; Environment Agency Local office, Local Authority Environmental Health or Waste Handling department.

The batteries and fire panel comply with WEEE disposal regulations. Do not dispose in general industrial or household waste. Return unwanted products to a designated collection point for waste electrical and electronic equipment recycling.

System Wiring

As the repeater panel have integral power supplies the only wiring that is required is the mains input to the power supply unit and the data cable between the Fire Panel and each repeater panel as illustrated in Figure 3.

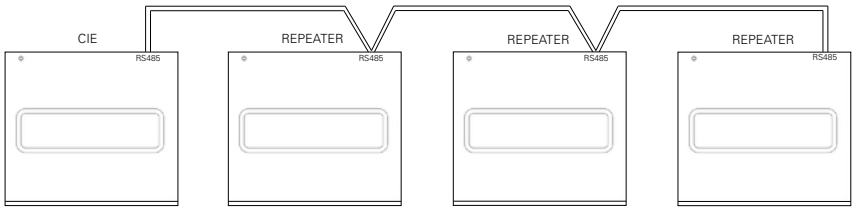

Figure 3. System Wiring Diagram

Status Indications

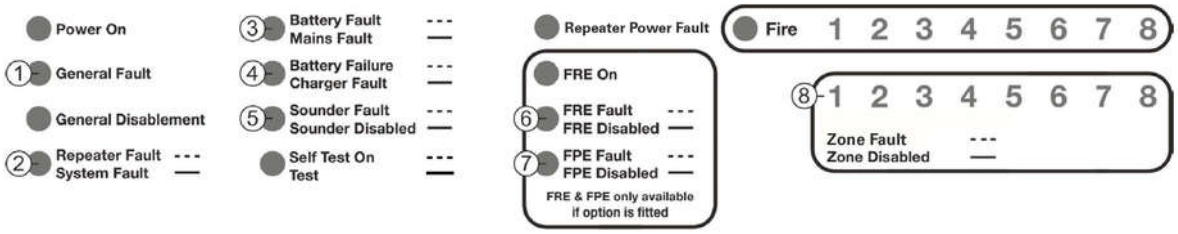

Figure 4. Front Panel Status Indications

KEY

ON (---------)	Indicator lit
OFF	Indicator unlit
SLOW (- - - -)	Indicator slow flashing, buzzer slow pulsing
FAST (- - - - -)	Indicator fast flashing, buzzer fast pulsing
SILENT	Sounders off, buzzer off
CONT	Sounders on, buzzers continuous
	Any condition could be indicated

	Visual indications																Audible Indications	
Condition	Power ON	General Fault	General Disablement	Repeater Fault/ System Fault	Battery Fault/ Mains Fault	Battery Failure/ Charger Fault	Sounder Fault/ Sounder Disablement	Self Test On /Test	Repeater Power Fault	FRE On	FRE Fault/ FRE Disablement	FPE Fault/ FPE Disablement	General Fire	Zone Fire (1-8)	Detector Removed /Zone Fault/ Zone Disablement	Panel Buzzer	Comments
Fire Panel Indications (These mirror the current Fire Panel state)																	
Normal Condition		OFF	OFF	OFF		OFF	OFF	OFF	OFF	OFF	OFF	OFF	OFF	OFF	OFF	OFF	Normal condition and at access level 1
Access Level 2 or 3																FAST	Access level 2 or 3 pass code accepted
Fire Condition										ON			ON	ON		CONT	Only the zone in fire will have its zone fire indicator lit
System Fault		ON		ON												SLOW	Severe fault condition with the Fire Panel
Repeater Fault		ON		SLOW												SLOW	Communication problem between Fire panel and repeater(s)
Battery Fault		ON			SLOW											SLOW	No battery voltage or battery voltage too low
Mains Fault		ON			ON											SLOW	Mains voltage has been lost
Battery Failure		ON				SLOW										SLOW	Battery impedance fault
Charger Fault		ON				ON										SLOW	Charger voltage fault
Sounder Fault		ON					SLOW									SLOW	Short or open circuit condition on the sounder circuit
FRE Fault		ON									SLOW					SLOW	Short or open circuit condition on the FRE output
FPE Fault		ON										SLOW				SLOW	Short or open circuit condition on the FPE output
Zone Fault		ON													SLOW	SLOW	Only the zone that has a short or open circuit fault will have its zone fault indicator slow flashing
Sounder disabled			ON				ON										All fire alarm devices are disabled
FRE disabled			ON								ON						FRE ouput disabled
FPE disabled			ON									ON					FPE output disabled
Zone disabled			ON												ON		Only the zone that is disabled will have its zone fault indicator lit
Repeater Panel Indications (Local to the repeater)																	
Normal Condition	ON																Normal condition and at access level 1
Battery Fault	ON								ON								No battery voltage or battery voltage too low
Mains Fault	ON								ON								Mains voltage has been lost
Battery Failure	ON								ON								Battery impedance fault
Charger Fault	ON								ON								Charger voltage fault
Communication Fault	ON																Communication lost with the Fire Panel

Repeater I/O

The Fire Panel provides a monitored RS485 bus that allows for up to 3 passive repeater panels to be connected to it. The repeater panels have their own power supplies so no power connection is required from the Fire Panel. Each repeater panel must be assigned a unique address using the DIP switches provided on the repeaters.

When the Fire Panel is first powered up or after a hard reset it will scan the RS485 bus for any repeaters connected. The panel will briefly flash the Zone Fault indicators to show the number of repeaters it has found. Below is a table of what these indications mean.

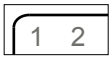

= 0 repeaters found



= 1 repeater found

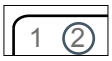

= 2 repeaters found

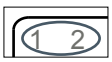

= 3 repeaters found

It is important to note this during installation to ensure that the panel has found the correct number of repeaters.

Once the repeaters have been found the Fire Panel will broadcast all status information to them so that they will mirror the indicator and buzzer states of the Fire Panel. The Fire Panel expects to receive a response from each repeater, if at any time a repeater stops responding for more than 60 seconds then the Fire Panel will start to flash the "Repeater Fault" indicator.

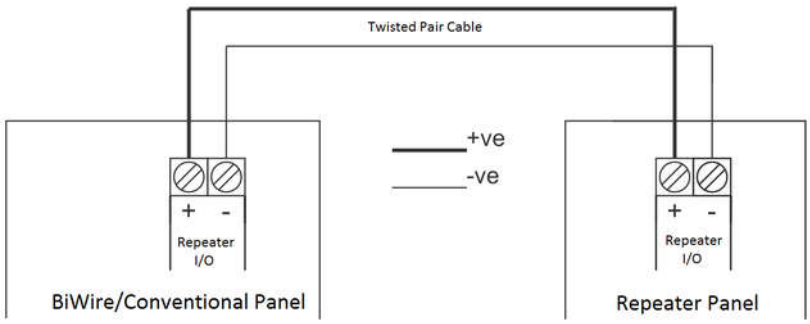

Figure 5. Repeater Panel Connection

Installation Instructions

This section of this guide explains in detail how the panel should be installed and configured to function properly.

Please ensure you have fully understood the components of the system and how they operate before proceeding with this section.

Take notice of the warnings and cautions as they are displayed for your own safety and to prevent damage to your equipment.

Before you begin

⚠ WARNING

WHEN INSTALLING THE REPEATER PANELS CARE SHOULD BE TAKEN TO ENSURE THAT THE INSTALLATION LOCATION DOES NOT SUBJECT THE PANEL TO ENVIRONMENTAL FACTORS IN EXCESS OF THE LIMITS OUTLINED IN THE TECHNICAL SPECIFICATION CONTAINED WITHIN THIS GUIDE.

⚠ CAUTION

ENSURE ANTI-STATIC PRECAUTIONS ARE TAKEN WHEN HANDLING ELECTRONIC COMPONENTS OF THE SYSTEM. DO NOT USE EXCESSIVE FORCE WHEN TIGHTENING THE TERMINAL BLOCKS.

🕮 NOTE

INSTALLATION & MAINTENANCE MUST BE PERFORMED BY AN APPROPRIATELY QUALIFIED PERSON. THE EQUIPMENT CARRIES NO WARRANTY UNLESS THE SYSTEM HAS BEEN INSTALLED AND COMMISSIONED AND SUBSEQUENTLY MAINTAINED BY APPROPRIATELY QUALIFIED PERSONS OR ORGANISATIONS. DO NOT ATTEMPT TO INSTALL THIS EQUIPMENT UNTIL YOU HAVE FULLY READ AND UNDERSTOOD THE OPERATION AS DESCRIBED WITHIN THIS MANUAL, FAILURE TO DO SO MAY RESULT IN DAMAGE TO THE EQUIPMENT AND COULD INVALIDATE YOUR WARRANTY.

🕮 NOTE

WHEN INSTALLED THIS EQUIPMENT IS SUBJECT TO THE EMC DIRECTIVE 2004/108/EC. TO MAINTAIN EMC COMPLIANCE THE FIRE ALARM SYSTEM MUST BE INSTALLED AS INSTRUCTED. THE INSTALLER WILL BE RESPONSIBLE FOR ANY EMC PROBLEMS THAT MAY OCCUR EITHER TO THE FIRE ALARM SYSTEM OR TO ANY OTHER EQUIPMENT AFFECTED BY THE INSTALLATION IF THERE IS ANY DEVIATION FROM THIS GUIDE.

🕮 NOTE

DIP SWITCH SETTINGS ONLY TAKE EFFECT ONCE THE PANEL HAS BEEN POWER CYCLED OR THE HARD RESET BUTTON IS PRESSED.

Panel Installation

NOTE

THE FOLLOWING INSTRUCTIONS MUST BE FOLLOWED WITH MAINS AND BATTERY SUPPLIES DISCONNECTED UNLESS OTHERWISE STATED.

NOTE

THE PANEL SHOULD BE INSTALLED IN A CLEAN, DRY, REASONABLY WELL VENTILATED PLACE, AND NOT IN DIRECT SUNLIGHT. TEMPERATURES IN EXCESS OF 40°C AND BELOW 5°C MAY CAUSE MALFUNCTIONS, IF IN DOUBT CONSULT EATON ELECTRICAL SYSTEMS. THE PANEL SHOULD BE LOCATED AWAY FROM ANY POTENTIAL HAZARD, IN A POSITION WHERE IT IS READILY ACCESSIBLE TO AUTHORISED STAFF, AND THE FIRE SERVICES, IDEALLY ON THE PERIMETER OF A BUILDING NEAR A PERMANENT ENTRANCE.

Mounting the Panel

To prepare the panel for mounting, you need to remove the front cover of the panel, and the PCB shelf and the PSE from the back box.

- To remove the front cover of the panel, unscrew the two retaining screws located at the top corners of the panel, see Figure 15.
- It is recommended to remove the PCB shelf and the PSE from the back box before drilling the holes.
- To remove the PCB shelf push the clips down ①, then push the shelf towards the top of the back box and then lift forwards ②, see Figure 17.
- To remove the PSE PCB from the back box unplug the cables from the main board as shown in Figure 17, then simply remove the screw and push the PCB up, to the right and forwards as shown in Figure 18.

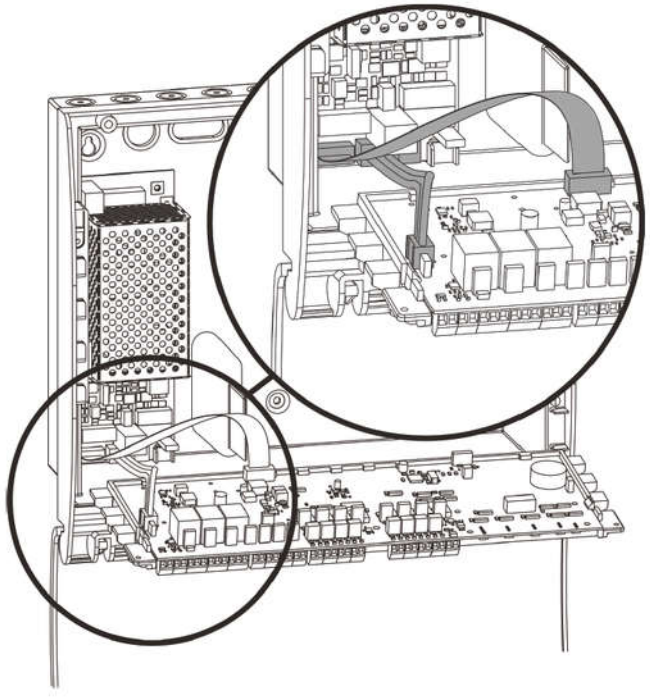

Figure 8. Disconnect the PSE

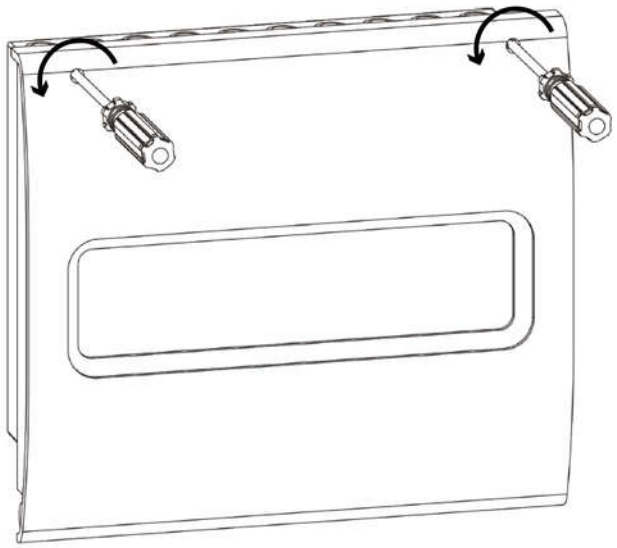

Figure 6. Remove Panel front cover

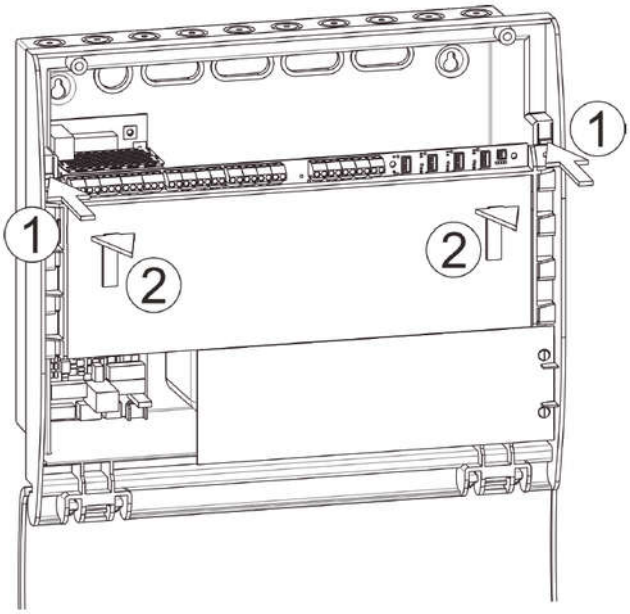

Figure 7. Remove the PSE Shelf

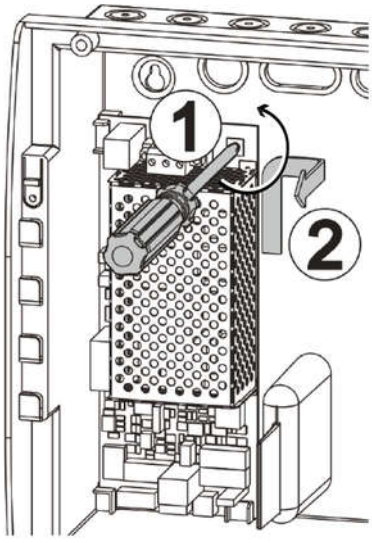

Figure 9. Remove the PSE

- Once the cable entry holes have been cut then fit the cable glands to the back box.
- If the panel is being flush mounted, then insert the panel into the recess feeding the cables through the rear cable entry points.
- If the panel is being wall mounted then cut out the required number of cable entry holes in the back using a 20mm hole saw with pilot drill bit as shown in Figure 19. Fit the glands to the back box and pull through the required cables.

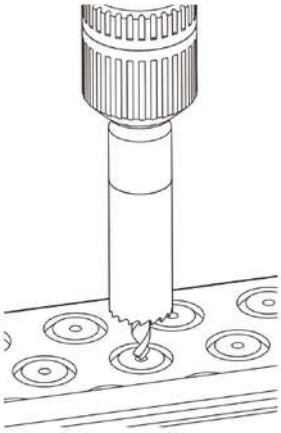

Figure 10. Cut cable entry holes

- Using the mounting holes in the back box, drill holes into the wall and insert wall plugs and secure the panel to the wall as shown in Figure 20. Ensure any dust is cleaned from the back box.
- Secure the PSE PCB back into the back box by following the reverse instructions in Figure 18.
- Fit the PCB shelf and cables by following the reverse instructions in Figure 16 and Figure 17 on page 9.
- If the panel is wall mounted, pull the cabling through the glands ready for wiring.
- Fit the door back onto the back box by following the reverse instructions in Figure 15.

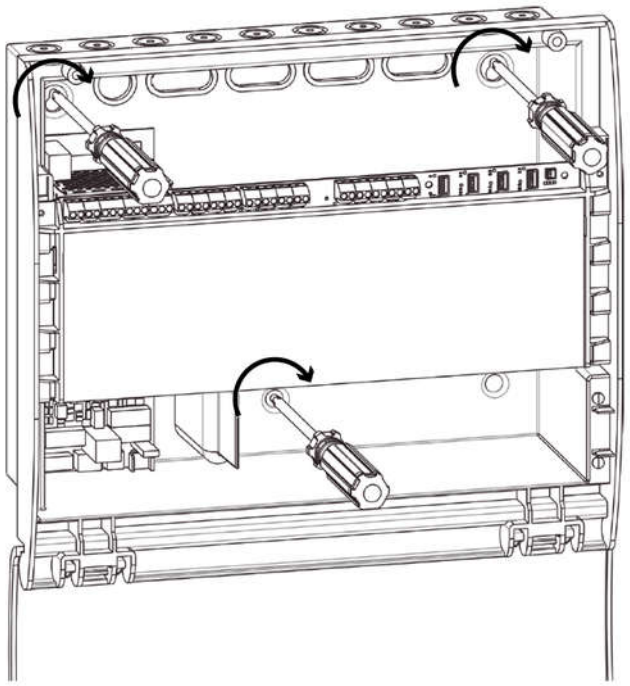

Figure 11. Secure the panel to the wall

Connecting the Mains Supply

The mains supply should be exclusive to the fire alarm as detailed in BS5839. A plug and socket is not satisfactory.

We recommend that a switched double pole fused spur unit is used for the sole use of the fire alarm system and should be clearly marked with:

FIRE ALARM DO NOT SWITCH OFF

Before connecting the fused spur to the PSE, slide the ferrite core (supplied with the panel) over the cable as shown in Figure 21.

Connect the fused spur to the input marked MAINS on the PSE, observing correct wiring regulations.

NOTES

OBEY VOLT DROP LIMITATION WHEN SIZING CABLES.

USE ONLY APPROVED CABLE TYPES.

DO NOT TIGHTEN TERMINAL CONNECTOR SCREWS TOO TIGHT.

KEEP POLARITY THROUGHOUT. NON COLOURED CONDUCTORS SHOULD BE PERMANENTLY MARKED.

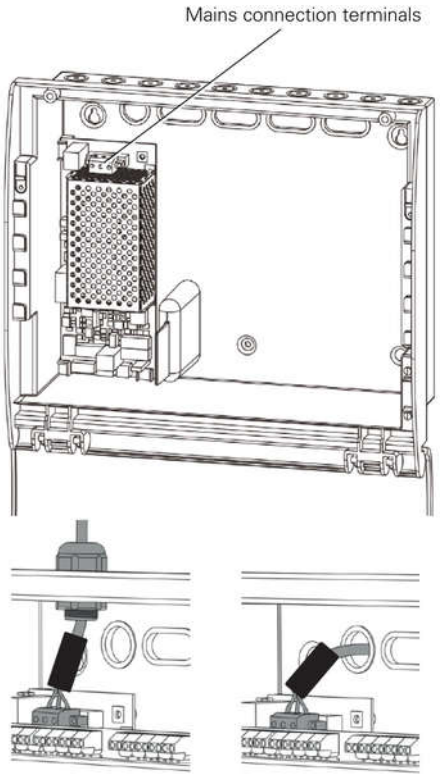

Figure 12. Mains Supply connection to PSE

Connecting the Battery Supply

A Battery cover is supplied to prevent accidental contact with the battery terminals and gives additional useful information. The battery cover can be moved out of the way as indicated in Figure 22.

Connect the spade connectors of the two wire battery cable and the single wire battery cable as illustrated in Figure 21

Do not connect the plastic socket end of the battery cable to the PSE until all installation actions in this guide have been completed and the system is ready for testing.

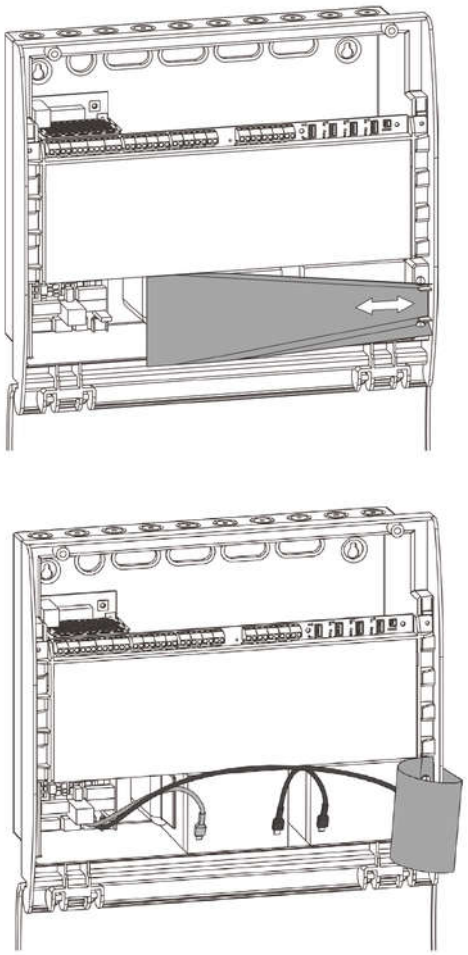

Figure 13. Battery cover removal

Battery Connections

1. Connect the **BLACK** battery wire to the **BLACK (-)** battery terminal of Battery B (Figure 23)
2. Connect the **RED** battery wire to the **RED (+)** battery terminal of Battery A (shown as grey)
3. Connect the link cable between the two remaining terminals

⚠ CAUTION

DO NOT USE A HIGH VOLTAGE TESTER WHEN WIRING IS CONNECTED TO ANY ELECTRONIC EQUIPMENT.

NOTE

IT IS IMPORTANT THAT ZONE CABLING IS CONNECTED TO THE CORRECT ZONE INPUT OTHERWISE ANY FIRE OR FAULT INDICATION ON THE PANEL WILL NOT MATCH THE ZONE MAP OF THE SITE, AND WILL NOT BE COMPLIANT WITH BS5839

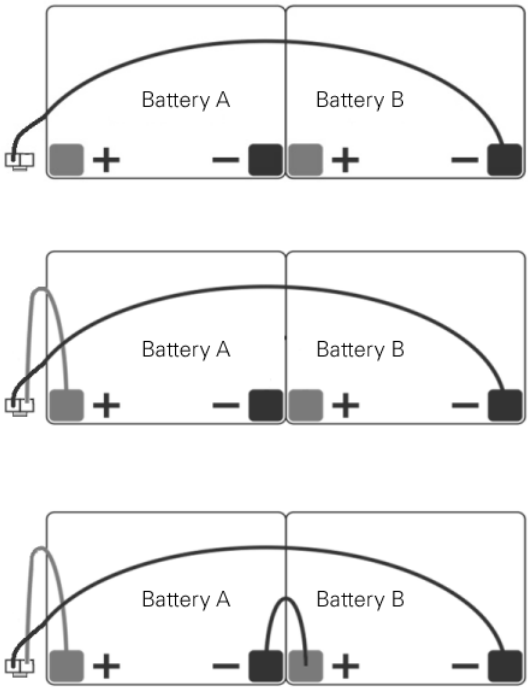

Figure 14. Battery Connection

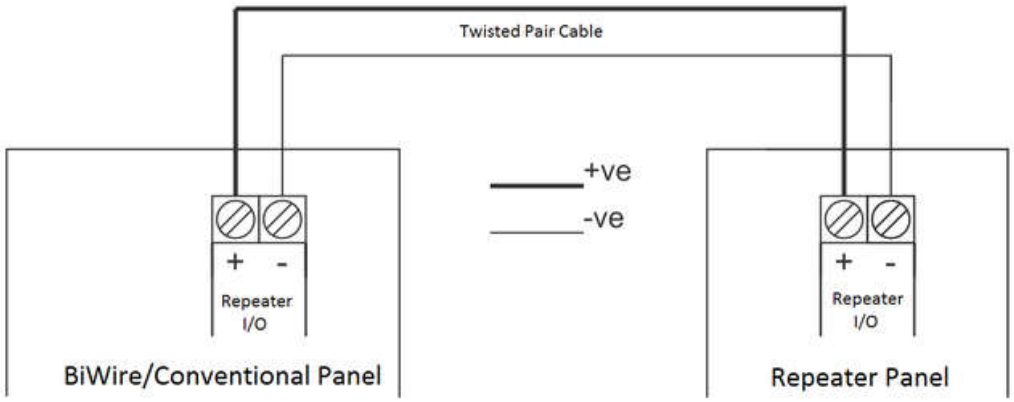

Figure 15. Repeater Panel Wiring Diagram

Connecting a Repeater Panel

If a single Repeater panel is being connected to the Fire Panel then simply connect one end of the twisted pair cable to the Repeater I/O terminals on the Fire Panel and the other end of the cable to the Repeater I/O terminals on the Repeater Panel (see Figure 15), observing correct polarity (+ to +., - to -).

When daisy chaining repeater panels together simply connect another twisted pair cable between each Repeater I/O terminals. This will mean that some of the terminals will have 2 cables connected to it.

Once all the repeaters are wired together each repeater panel needs to be assigned a unique address from 1 to 3 DIP switch 12 as shown below.

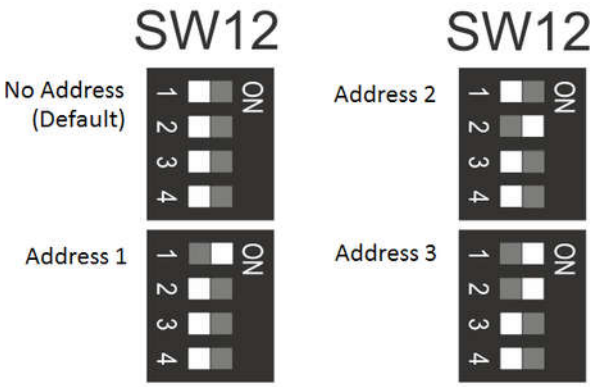

Figure 16. Interlink wiring diagram

Installation Testing

Initial Power-up Check

Power up the panel by engaging the fuse spur to supply mains, then connect the white socket of the battery cable to the power supply (see Figure 24 on page 16).

Check that all indicators turn on in turn momentarily and turn off again.

Only the power on indicator should be lit afterwards.

Any fault indications should be investigated and corrective actions taken before continuing with the installation tests. "Status Indications" on page 8 provides a comprehensive guide to the fault indications.

Power off the panel before commencing any corrective action on the panel.

⚠ WARNING

DO NOT FIX ANY FAULT CONDITIONS WITH THE SYSTEM STILL POWERED UP. THIS IS PARTICULARLY IMPORTANT WITH SHORT CIRCUIT FAULTS ON ZONES AS THE PTC FUSE NEEDS TIME TO RECOVER IF IT HAS TRIPPED.

Repeater Check

- Place an individual zone into Zone Test Mode on the Fire Panel (see Fire Panel manual for further instructions on how to put it into Zone Test mode). Check the following on the repeater panel:
  - Self-Test On indicator is slow flashing
  - Buzzer is slow beeping
- Activate a call point that in the zone in test mode and then check the following on the repeater panel:
  - Self-test On indicator is slow flashing
  - General Fire indicator is on
  - Correct zone fire indicator is on
  - Buzzer is continuous
- Take the Zone out of Test Mode at the Fire Panel and reset the system. All indications on the repeater should mirror those on the Fire Panel.

Battery Fault Detection Check

Disconnect the battery of the repeater panel.

After about 20 seconds check the Repeater Power Fault indicator is on.

Re-connect the battery of the repeater panel.

After about 4 seconds check the Repeater Power Fault indicator is off.

Operating Instructions

Multi-Function Buttons



The numerical value in the centre of the button is used to enter access codes for level 2.

Mute Buzzer

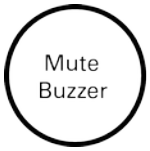

This function is available at access level 1 and 2.

- To silence the panel's internal buzzer at access level 1 just press the **Mute Buzzer** button.
- To silence the panel's internal buzzer at access level 2 enter the code 3112 and then press the **Mute Buzzer** button.
- This will only silence the buzzer of the repeater and not the Fire Panel

This function will immediately exit back to Access Level 1.

Lamp Test



This function is available at access level 2.

- Enter the access code 3112.
- Press **Indicator Test** button ③.
- Each indicator on the front of the panel will turn on in turn and then turn off in turn (excluding the Power On indicator).

This function will immediately exit back to Access Level 1.

Technical Specification

Panel Specification

		EFBWCV-REPEATER
Power Specification		
Input Voltage Range		18.75-30.7V DC
Maximum current drawn from battery		2.7A
Communication Ports		
Repeater Port	Type	RS485
	Nodes	Up to 3 repeaters and a fire panel
		Note: The use of this port is outside the scope of EN54 certification
Environmental		
Operating Temperature	°C	-5°C to +40°C
Relative Humidity	%	93% +/3% non-condensing
IP Rating		IP30
Mechanical		
Dimensions	mm	375 (W) x 366 (H) x 134 (D)
Weight	kg	2.25
Material		PC ABS Front and Rear
Cabling		
Cable Access		29 x 20mm drill positions - Slots for rear cable entry
Cable Type		Cable type 2 core 1.5mm, 2 screened fire rated cable (twisted pair) 500m (max)
Compliance		
Compliance to Standards		BS5839, part1

PSE Specification

	EFBWCV-REPEATER
Power Specification	
Mains Voltage	230V AC -10% / +15%, 50Hz
Mains Fuse	1 Amp Anti-Surge
Battery Details	
Number of Batteries	2
Capacity	12V, 5Ah
Recommended Battery	Yucell Y5-12 (Yuasa)
Battery Fuse	6.3A Anti-Surge
Battery voltage (Charging value)	27.3V DC @20%
Recommended period for battery replacement	5 years
PSE Ratings	
Ouptut voltage	18.75-30.7V DC
Maximum ripple voltage	425mV rms (1.2Vp-p)
Imin	39mA
Ri max	1Ω
PSE Fault Options	
Mains OK (J4 pin 4)	>=3V Mains present, <=3V Mains fault
Fault_Charger (J4 pin 1)	>=3V for 1s pulsed at 0.2Hz Charger OK
	>=3V for 1s pulsed at 1Hz Charger fault
	Steady high/low (no pulsing) PSE Micro fault
Fault_Battery (J4 pin 3)	=0.17* (Vbat-0.6) Volts
0V (J4 pins 2 and 10)	reference

Manufacturers Contact Details

Eaton Industries Manufacturing GMBH
Electrical Sector EMEA
Route de la Longeraie 7
1110 Morges
Switzerland

Technical Support
Tel: +44 (0)1302 303 350
FireTechSupport@Eaton.com
Eaton Electrical Systems Ltd.
Wheatley Hall Road
Doncaster
South Yorkshire
DN2 4NB
http://www.cooperfire.com

Sales:
Tel: +44 (0)1302 303 303
FireSales@Eaton.com

CE 17

Manufactured by

Eaton Electrical Systems Limited.
Wheatley Hall Rd
Doncaster
South Yorkshire
DN2 4NB
Eaton.uk.com
Tel. +44 (0) 1302 303 350
www.cooperfire.com
www.eaton.com
Made in the UK

Eaton Industries Manufacturing GmbH
Electrical Sector EMEA
Route de la Longeraie 7
1110 Morges, Switzerland
Eaton.eu

© 2017 Eaton All Rights Reserved
March 2017
Publication No. PR216-219-508-01

Eaton is a registered trademark.

All other trademarks are property
of their respective owners.

Powering Business Worldwide