6008-2RS1

SKF Explorer

Dimensions

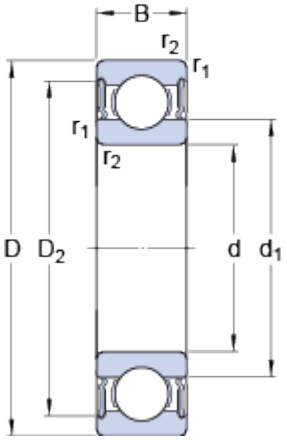

d		40	mm
D		68	mm
B		15	mm
d_1		49.25	mm
D_2		61.1	mm
$r_{1,2}$	min.	1	mm

Abutment dimensions

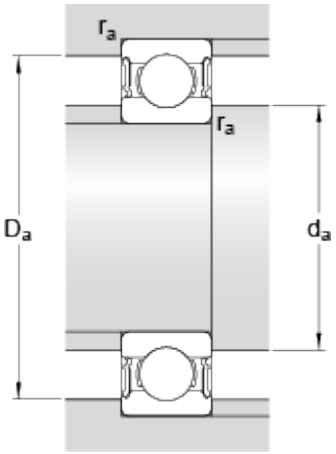

d_a	min.	44.6	mm
d_a	max.	49.2	mm
D_a	max.	63.4	mm
r_a	max.	1	mm

Calculation data

Basic dynamic load rating	C	17.8	kN
Basic static load rating	C_0	11	kN
Fatigue load limit	P_u	0.49	kN
Limiting speed		6300	r/min
Calculation factor	k_r	0.025	
Calculation factor	f_0	15	

Mass

Mass bearing		0.198	kg