Y-bearing flanged units with cast housing

d **12–100** mm

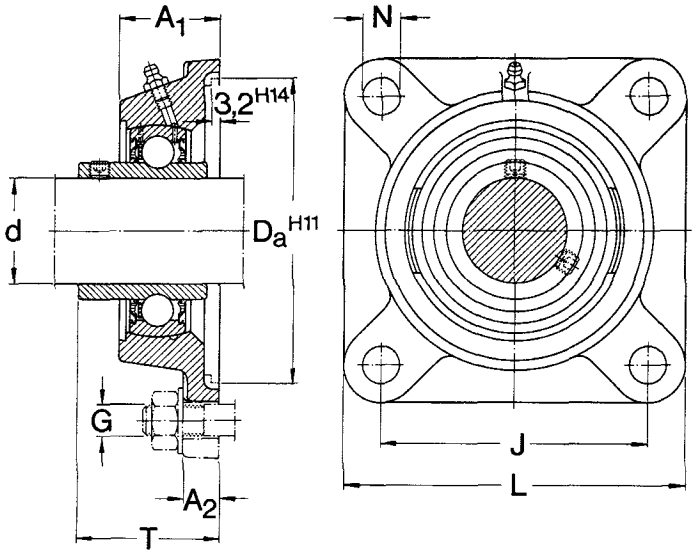

Dimensions									Mass	Designations		
										Unit[1]	Housing	Y-bearing
d	A_1	A_2	D_a	J	L	N	G	T				
mm									kg	–		
12	26	11	55,6	54	76	11,5	10	39,1	0,48	**FY 12 FM**	FY 503 M	YET 203/12
								32,9	0,47	**FY 12 TF**	FY 503 M	YAR 203/12-2F
15	26	11	55,6	54	76	11,5	10	39,1	0,47	**FY 15 FM**	FY 503 M	YET 203/15
								32,9	0,45	**FY 15 TF**	FY 503 M	YAR 203/15-2F
17	26	11	55,6	54	76	11,5	10	39,1	0,46	**FY 17 FM**	FY 503 M	YET 203
								40,4	0,48	**FY 17 WM**	FY 503 M	YEL 203
								32,9	0,44	**FY 17 TF**	FY 503 M	YAR 203-2F
20	29,5	11	68,3	63,5	86	11,5	10	42,5	0,62	**FY 20 FM**	FY 504 M	YET 204
								45,6	0,65	**FY 20 WM**	FY 504 M	YEL 204
								37,3	0,60	**FY 20 TF**	FY 504 M	YAR 204-2F
								39,5	0,60	**FY 20 KG**	FY 504 M	362004 BTN
25	30	12	74,6	70	95	11,5	10	42,5	0,78	**FY 25 FM**	FY 505 M	YET 205
								45,9	0,83	**FY 25 WM**	FY 505 M	YEL 205
								38,8	0,77	**FY 25 TF**	FY 505 M	YAR 205-2F
								39,5	0,77	**FY 25 KG**	FY 505 M	362005 BTN
30	32,5	13	93,7	82,5	108	11,5	10	46,7	1,10	**FY 30 FM**	FY 506 M	YET 206
								50,1	1,20	**FY 30 WM**	FY 506 M	YEL 206
								42,2	1,10	**FY 30 TF**	FY 506 M	YAR 206-2F
								43	1,10	**FY 30 KG**	FY 506 M	362006 BTN
35	34,5	13	106,4	92	118	14	12	50,4	1,50	**FY 35 FM**	FY 507 M	YET 207
								53,3	1,55	**FY 35 WM**	FY 507 M	YEL 207
								46,4	1,40	**FY 35 TF**	FY 507 M	YAR 207-2F
								45,5	1,45	**FY 35 KG**	FY 507 M	362007 B
40	38,5	14	115,9	101,5	130	14	12	56,7	1,95	**FY 40 FM**	FY 508 M	YET 208
								58,9	2,05	**FY 40 WM**	FY 508 M	YEL 208
								54,2	1,90	**FY 40 TF**	FY 508 M	YAR 208-2F
								51	1,90	**FY 40 KG**	FY 508 M	362008 B

[1] The units FY-WM are also available with flingers or flocked flingers; they then carry the suffixes F or L, e.g. FY 17 WF or FY 17 WL
The units FY-TF are also available with flocked flingers or without flingers; they then carry the suffixes L or M, e.g. FY 12 TL or FY 12 TM

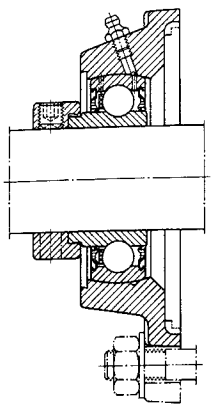

Series FY-FM

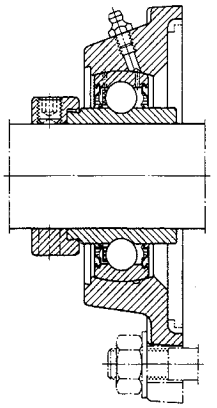

Series FY-WM

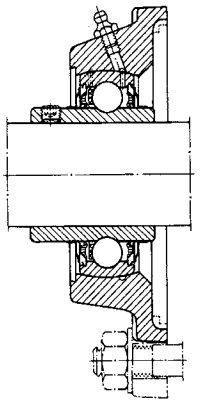

Series FY-TF, FYJ-TG

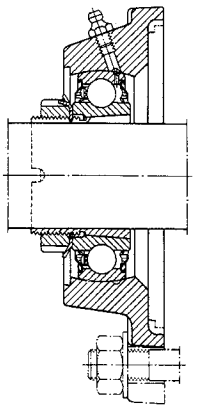

Series FY-KG

Dimensions									Mass	Designations Unit[1]	Housing	Y-bearing
d	A_1	A_2	D_a	J	L	N	G	T				
mm									kg	–		
45	39	14	119,1	105	137	16	14	56,7	2,15	**FY 45 FM**	FY 509 M	YET 209
								58,9	2,25	**FY 45 WM**	FY 509 M	YEL 209
								54,2	2,10	**FY 45 TF**	FY 509 M	YAR 209-2F
50	43	15	125,4	111	143	18	16	60,7	2,55	**FY 50 FM**	FY 510 M	YET 210
								66,1	2,70	**FY 50 WM**	FY 510 M	YEL 210
								60,6	2,50	**FY 50 TF**	FY 510 M	YAR 210-2F
55	47,5	16	150,8	130	162	18	16	67,4	3,60	**FY 55 FM**	FY 511 M	YET 211
								74,6	3,85	**FY 55 WM**	FY 511 M	YEL 211
								64,4	3,60	**FY 55 TF**	FY 511 M	YAR 211-2F
60	52	17	161,9	143	175	18	16	80,8	5,00	**FY 60 WM**	FY 512 M	YEL 212
								73,7	4,60	**FY 60 TF**	FY 512 M	YAR 212-2F
65	52,5	17	161,9	149,5	187	18	16	76,9	5,30	**FY 65 TF**	FY 513 M	YAR 213-2F
70	51	22	161,9	152	193	19	16	76,1	6,00	**FYJ 70 TG**	FYJ 514	YAJ 214-2F
80	55,5	23	179,4	165	208	22	20	84,3	7,60	**FYJ 80 TG**	FYJ 516	YAJ 216-2F
90	65	25	193,7	187	235	22	20	97,9	11,5	**FYJ 90 TG**	FYJ 518	YAJ 218-2F
100	70	25	215,9	210	265	27	24	110,1	15,0	**FYJ 100 TG**	FYJ 520	YAJ 220-2F

[1] The units FY-WM are also available with flingers or flocked flingers; they then carry the suffixes F or L, e.g. FY 45 WF or FY 45 WL
The units FY-TF und FYJ-TG are also available with flocked flingers or without flingers; they then carry the suffixes L or M and P or J respectively, e.g. FY 45 TL or FY 45 TM and FYJ 70 TP or FYJ 70 TJ

Y-bearing flanged units with cast housing for inch shafts

d 5/8–1 11/16 in

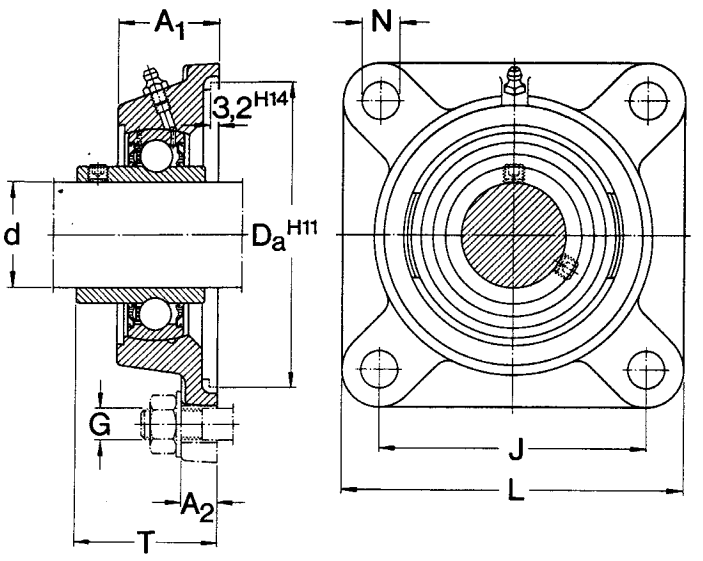

Dimensions									Mass	Designations Unit[1]	Housing	Y-bearing
d	A_1	A_2	D_a	J	L	N	G	T				
in	mm								kg	–		
5/8	26	11	55,6	54	76	11,5	10	39,1	0,47	**FY 5/8 FM**	FY 503 M	YET 203-010
								40,4	0,48	**FY 5/8 WM**	FY 503 M	YEL 203-010
								32,9	0,44	**FY 5/8 TF**	FY 503 M	YAR 203-010-2F
11/16	26	11	55,6	54	76	11,5	10	39,1	0,46	**FY 11/16 FM**	FY 503 M	YET 203-011
								40,4	0,47	**FY 11/16 WM**	FY 503 M	YEL 203-011
								32,9	0,44	**FY 11/16 TF**	FY 503 M	YAR 203-011-2F
3/4	29,5	11	68,3	63,5	86	11,5	10	42,5	0,62	**FY 3/4 FM**	FY 504 M	YET 204-012
								45,6	0,65	**FY 3/4 WM**	FY 504 M	YEL 204-012
								37,3	0,60	**FY 3/4 TF**	FY 504 M	YAR 204-012-2F
13/16	30	12	74,6	70	95	11,5	10	42,5	0,82	**FY 13/16 FM**	FY 505 M	YET 205-013
								45,9	0,88	**FY 13/16 WM**	FY 505 M	YEL 205-013
								38,8	0,81	**FY 13/16 TF**	FY 505 M	YAR 205-013-2F
7/8	30	12	74,6	70	95	11,5	10	42,5	0,81	**FY 7/8 FM**	FY 505 M	YET 205-014
								45,9	0,86	**FY 7/8 WM**	FY 505 M	YEL 205-014
								38,8	0,81	**FY 7/8 TF**	FY 505 M	YAR 205-014-2F
15/16	30	12	74,6	70	95	11,5	10	42,5	0,80	**FY 15/16 FM**	FY 505 M	YET 205-015
								45,9	0,84	**FY 15/16 WM**	FY 505 M	YEL 205-015
								38,8	0,78	**FY 15/16 TF**	FY 505 M	YAR 205-015-2F
1	30	12	74,6	70	95	11,5	10	42,5	0,78	**FY 1. FM**	FY 505 M	YET 205-100
								45,9	0,82	**FY 1. WM**	FY 505 M	YEL 205-100
								38,8	0,77	**FY 1. TF**	FY 505 M	YAR 205-100-2F
1 1/8	32,5	13	93,7	82,5	108	11,5	10	46,7	1,15	**FY 1.1/8 FM**	FY 506 M	YET 206-102
								50,1	1,20	**FY 1.1/8 WM**	FY 506 M	YEL 206-102
								42,2	1,10	**FY 1.1/8 TF**	FY 506 M	YAR 206-102-2F
1 3/16	32,5	13	93,7	82,5	108	11,5	10	46,7	1,10	**FY 1.3/16 FM**	FY 506 M	YET 206-103
								50,1	1,15	**FY 1.3/16 WM**	FY 506 M	YEL 206-103
								42,2	1,10	**FY 1.3/16 TF**	FY 506 M	YAR 206-103-2F

[1] The units FY-WM are also available with flingers or flocked flingers; they then carry the suffixes F or L, e.g. FY 5/8 WF or FY 5/8 WL
The units FY-TF are also available with flocked flingers or without flingers; they then carry the suffixes L or M, e.g. FY 5/8 TL or FY 5/8 TM.

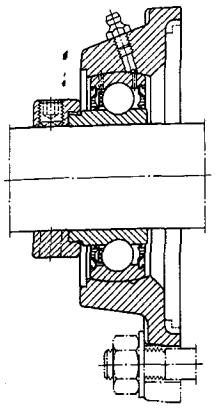

Series FY-FM

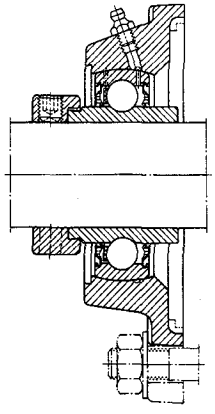

Series FY-WM

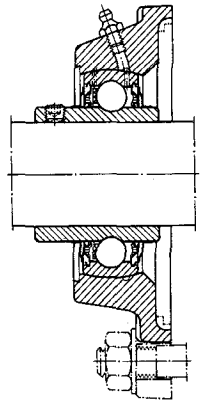

Series FY-TF

Dimensions									Mass	Designations Unit[1]	Housing	Y-bearing
d	A_1	A_2	D_a	J	L	N	G	T				
in	mm								kg	–		
1 1/4	32,5	13	93,7	82,5	108	11,5	10	46,7	1,10	**FY 1.1/4 AFM**	FY 506 M	YET 206-104
								50,1	1,15	**FY 1.1/4 AWM**	FY 506 M	YEL 206-104
								42,2	1,05	**FY 1.1/4 ATF**	FY 506 M	YAR 206-104-2F
	34,5	13	106,4	92	118	14	12	50,4	1,55	**FY 1.1/4 FM**	FY 507 M	YET 207-104
								53,3	1,60	**FY 1.1/4 WM**	FY 507 M	YEL 207-104
								46,4	1,45	**FY 1.1/4 TF**	FY 507 M	YAR 207-104-2F
1 5/16	34,5	13	106,4	92	118	14	12	50,4	1,50	**FY 1.5/16 FM**	FY 507 M	YET 207-105
								53,3	1,60	**FY 1.5/16 WM**	FY 507 M	YEL 207-105
								46,4	1,45	**FY 1.5/16 TF**	FY 507 M	YAR 207-105-2F
1 3/8	34,5	13	106,4	92	118	14	12	50,4	1,50	**FY 1.3/8 FM**	FY 507 M	YET 207-106
								53,3	1,55	**FY 1.3/8 WM**	FY 507 M	YEL 207-106
								46,4	1,40	**FY 1.3/8 TF**	FY 507 M	YAR 207-106-2F
1 7/16	34,5	13	106,4	92	118	14	12	50,4	1,45	**FY 1.7/16 FM**	FY 507 M	YET 207-107
								53,3	1,50	**FY 1.7/16 WM**	FY 507 M	YEL 207-107
								46,4	1,40	**FY 1.7/16 TF**	FY 507 M	YAR 207-107-2F
1 1/2	38,5	14	115,9	101,5	130	14	12	56,7	2,00	**FY 1.1/2 FM**	FY 508 M	YET 208-108
								58,9	2,10	**FY 1.1/2 WM**	FY 508 M	YEL 208-108
								54,2	1,95	**FY 1.1/2 TF**	FY 508 M	YAR 208-108-2F
1 9/16	38,5	14	115,9	101,5	130	14	12	56,7	2,00	**FY 1.9/16 FM**	FY 508 M	YET 208-109
								58,9	2,05	**FY 1.9/16 WM**	FY 508 M	YEL 208-109
								54,2	1,90	**FY 1.9/16 TF**	FY 508 M	YAR 208-109-2F
1 5/8	39	14	119,1	105	137	16	14	56,7	2,25	**FY 1.5/8 FM**	FY 509 M	YET 209-110
								58,9	2,35	**FY 1.5/8 WM**	FY 509 M	YEL 209-110
								54,2	2,20	**FY 1.5/8 TF**	FY 509 M	YAR 209-110-2F
1 11/16	39	14	119,1	105	137	16	14	56,7	2,20	**FY 1.11/16 FM**	FY 509 M	YET 209-111
								58,9	2,30	**FY 1.11/16 WM**	FY 509 M	YEL 209-111
								54,2	2,15	**FY 1.11/16 TF**	FY 509 M	YAR 209-111-2F

[1] The units FY-WM are also available with flingers or flocked flingers; they then carry the suffixes F or L, e.g. FY 1.1/4 WF or FY 1.1/4 WL
The units FY-TF are also available with flocked flingers or without flingers; they then carry the suffixes L or M, e.g. FY 1.1/4 TL or FY 1.1/4 TM