THE INFORMATION CONTAINED IN THIS DRAWING IS THE SOLE PROPERTY OF L-COM, INC. ANY REPRODUCTION IN PART OR WHOLE WITHOUT THE WRITTEN PERMISSION OF L-COM, INC. IS PROHIBITED.

REVISIONS			
REV	DESCRIPTION	DATE	APPROVED
A	INITIAL RELEASE	6/21/10	D.GRIFFIN
B	ECN 4869: REVISE VIEW OF RP SMA JACK TO PLUG	6/28/10	D.FRISIELLO

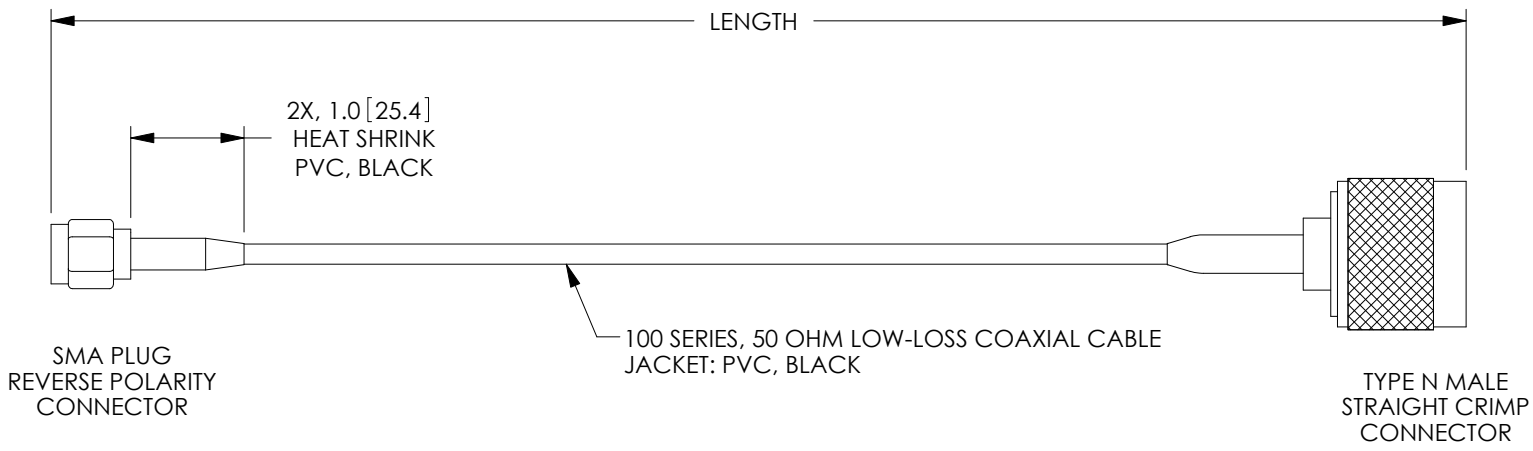

LENGTH CODE CHART		
CABLE# & LENGTH	LENGTH SYMBOL	EXAMPLES OF PART# USED
CA-RSPNMCXXX	WHERE XXX = LENGTH IN FEET	CA-RSPNMC010 (10 FEET)
CA-RSPNMCNXX	WHERE NXX = LENGTH IN INCHES	CA-RSPNMCN16 (16 INCHES)
CA-RSPNMCMXX	WHERE MXX = LENGTH IN METERS	CA-RSPNMCM07 (7 METERS)
CA-RSPNMCXMX	WHERE XMX = LENGTH IN DECIMAL METERS	CA-RSPNMC3M5 (3.5 METERS)

RoHS Compliant ✔

NOTES:

CABLE ASSEMBLY SHALL BE TESTED FOR CONTINUITY.

CABLE ASSEMBLY SHALL BE INDIVIDUALLY PACKAGED IN ACCORDANCE WITH L-COM SPECIFICATION PS-0031.

UNLESS OTHERWISE SPECIFIED,
DIMENSIONS ARE IN INCHES [mm]
OVERALL CABLE LENGTH TOLERANCE:
≤12 [305] = +1 [25] / -0
>12 [305] ≤60 [1524] = +2 [51] / -0
>60 [1524] ≤120 [3048] = +4 [102] / -0
>120 [3048] ≤300 [7620] = +6 [152] / -0
>300 [7620] = +5% / -0%
ALL OTHER DIMENSIONAL TOLERANCES:
.X = ± .2
.XX = ± .02
.XXX = ±.005
PROJECTION

APPROVALS	DATE
DRAWN BY D.FRISIELLO	6/18/10
CHECKED BY K.BURGNER	6/18/10
APPROVED BY K.BURGNER	6/18/10

CONFIGURATION DETAILS OF UNDIMENSIONED FEATURES MAY VARY

COLOR VARIATIONS MAY OCCUR

L-COM Global Connectivity
45 BEECHWOOD DRIVE
NORTH ANDOVER, MA
01845

CATEGORY
COAXIAL

PRODUCT DESCRIPTION
CA, CA100 RP-SMA P/N-MALE

SIZE	FSCM NO.	DWG. NO.	REV.
A	43321	CA-RSPNMC	B

SCALE: NONE | CAD FILE: CA-RSPNMC.SLDDRW | SHEET 1 OF 1