RKC8T-5-RSC8T/TXY3013
Actuator and Sensor Cable, PUR – Extension Cable

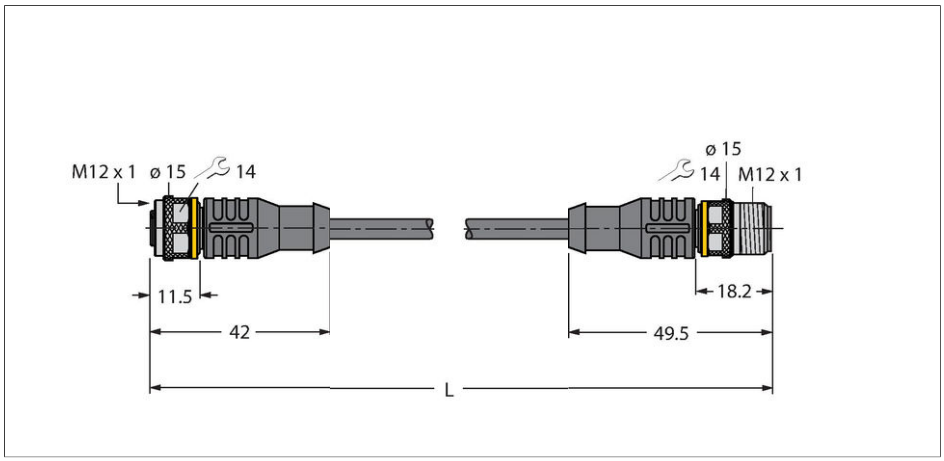

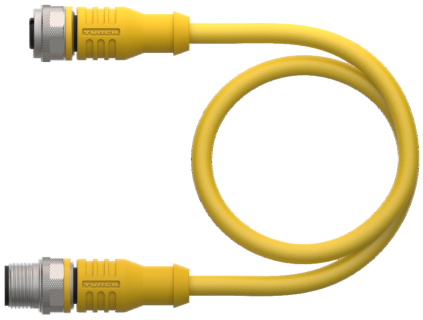

Technical data

Type	RKC8T-5-RSC8T/TXY3013
ID no.	100000220
Connector A	Female, M12 × 1, Straight, A-coded
Number of Pins	8
Contacts	Brass, CuZn, Gold-plated
Contact carriers	Plastic, TPU, Black
Connector body	Plastic, TPU, Yellow
Coupling nut/screw	Brass, CuZn, Nickel-plated
Seal	Plastic, FPM/FKM
Mechanical lifespan	> 100 Mating cycles
Pollution degree	3
Type of protection	IP67, IP69K, Only in screwed condition
Connector B	Male, M12 × 1, Straight, A-coded
Number of pins	8
Contacts	Brass, CuZn, Gold-plated
Contact carriers	Plastic, TPU, Black
Connector body	Plastic, TPU, Yellow
Coupling nut/retaining screw	Brass, CuZn, Nickel-plated
Mechanical lifespan	> 100 Mating cycles
Pollution degree	3
Protection class	IP67, IP69K, only in screwed state
Cable	
Cable diameter	Ø 5.9 mm ± 0.20
Cable length	5 m
Cable jacket	PUR, Yellow
Core insulation	PP
Core cross-section	8 x 0.25 mm²

Features

- Female M12, straight, 8-pin
- Male M12, straight, 8-pin
- Jacket material: PUR
- Jacket color: yellow
- Grip color: yellow
- Suitable for drag chain use
- Resistant to chemicals, UV radiation and oils
- Flame-retardant (FT2 in accordance with UL 1581, IEC 60332-2-2)
- Free from halogen, silicone, PVC and LABS
- Particularly resistant to abrasion
- Approval: cULus
- RoHS-compliant
- Protection class: IP67, IP69K
- Cable length: 5.0 m

Cable Cross-Section

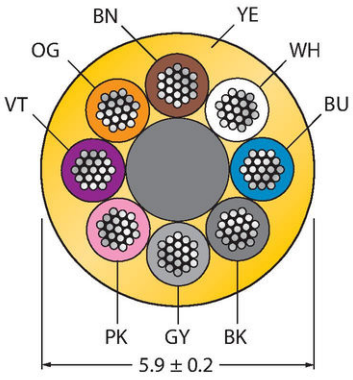

RKC8T-5-RSC8T/TXY3013| 05-05-2021 04-08 | Technical modifications reserved

Technical data

Arrangement of strands	32 x 0.1 mm
Core colors	BN, WH, BU, BK, GY, PK, VT, OG
Electrical properties at +20 °C	
Rated voltage	30 V
Test voltage	2000 V
Current	2 A
Insulation resistance	> 30.5 MΩ/km
forward resistance	max. 79 Ω/km
Mechanical and chemical properties	
Bending radius (stationary installation)	≥ 5 x Ø
Bending radius (flexible use)	≥ 10 x Ø
Bending cycles	≥ 2 million
Admissible acceleration	max. 5 m/s²
Admissible travel path, horizontal	5 m (at 5 m/s²)
Admissible travel path, vertical	2 m (at 5 m/s²)
Admissible traversing speed	3.3 m/s
Torsional stress	± 180 °/m
Ambient temperature range (stationary)	-50 °C…+80 °C
Ambient temperature range (In motion)	-25 °C…+80 °C
Drag chain operation	-25 °C…+60 °C

Stranded Wire Colors

Pin	DIN 47100 (old)	DIN EN 60947-5-2 (new)
1	WH	BN
2	BN	WH
3	GN	BU
4	YE	BK
5	GY	GY
6	PK	PK
7	BU	VT
8	RD	OG

Contact assignment

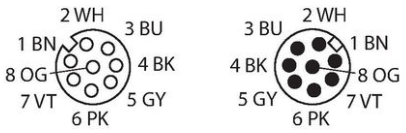

Circuit Diagram

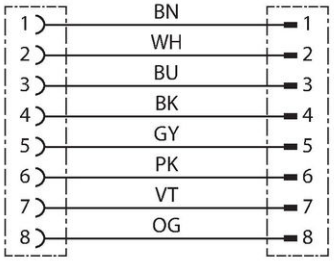

Accessories

TORQUE-WRENCH-SET-AS 6936170



Torque wrench set; handles with adjustable torque 0.4-1.0 Nm, torque wrench for M8 (SW9), fork wrench for M12 (SW 14)

BLANK-LABEL-FOR-CORDSETS-TEL-TXL 6936206

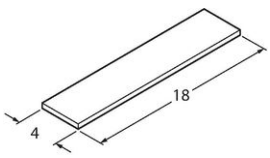

Label for TEL and TXL cables, length: 18 mm, height: 4 mm, material: polycarbonate (PC), color: white, halogen-free and flame-retardant

RKC8T-5-RSC8T/TXY3013| 05-05-2021 04-08 | Technical modifications reserved