3/2-directional valve, pneumatically operated, Series AS2-SOV

R412006262

General series information
Series AS2

- The AVENTICS Series AS2 is a modular, versatile maintenance unit for universal application. This Series offers compact dimensions, is highly efficient, lightweight and easy-to-use. The AVENTICS Series AS guarantees reliability, safety, and efficiency with a simplified assembly and maintenance efforts.



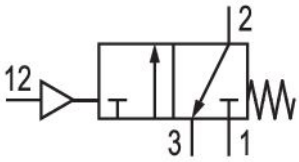

Technical data

Industry
Industrial

Activation
Pneumatically

Parts
3/2-directional valve

Nominal flow Qn
2000 l/min

Compressed air connection
G 1/4

Working pressure min.
0 bar

Working pressure max
16 bar

Connection type
Pipe connection

Sealing principle
Soft Seal

Type
Poppet valve

Can be assembled into blocks
Can be assembled into blocks

Control pressure min.
2.5 bar

Control pressure max.
16 bar

Min. ambient temperature
-10 °C

Max. ambient temperature
50 °C

Medium
Compressed air

Neutral gases

Compressed air connection pilot exhaust
G 1/8

Compressed air connection, exhaust
G 1/4

Nominal flow Qn 1 to 2
2000 l/min

Nominal flow Qn 2 to 3
380 l/min

Weight
0.219 kg

Material

Housing material
Polyamide

Seal material
Acrylonitrile butadiene rubber

Material, front cover
Acrylonitrile butadiene styrene

Material threaded bushing
Die cast zinc

Part No.
R412006262

Technical information

The pressure dew point must be at least 15 °C under ambient and medium temperature and may not exceed 3 °C .

Nominal flow Qn with secondary pressure p2 = 6 bar at Δp = 1 bar

A short silencer is required for wall mounting (see accessories e.g. R412004817).

Dimensions in mm

Fig. 2

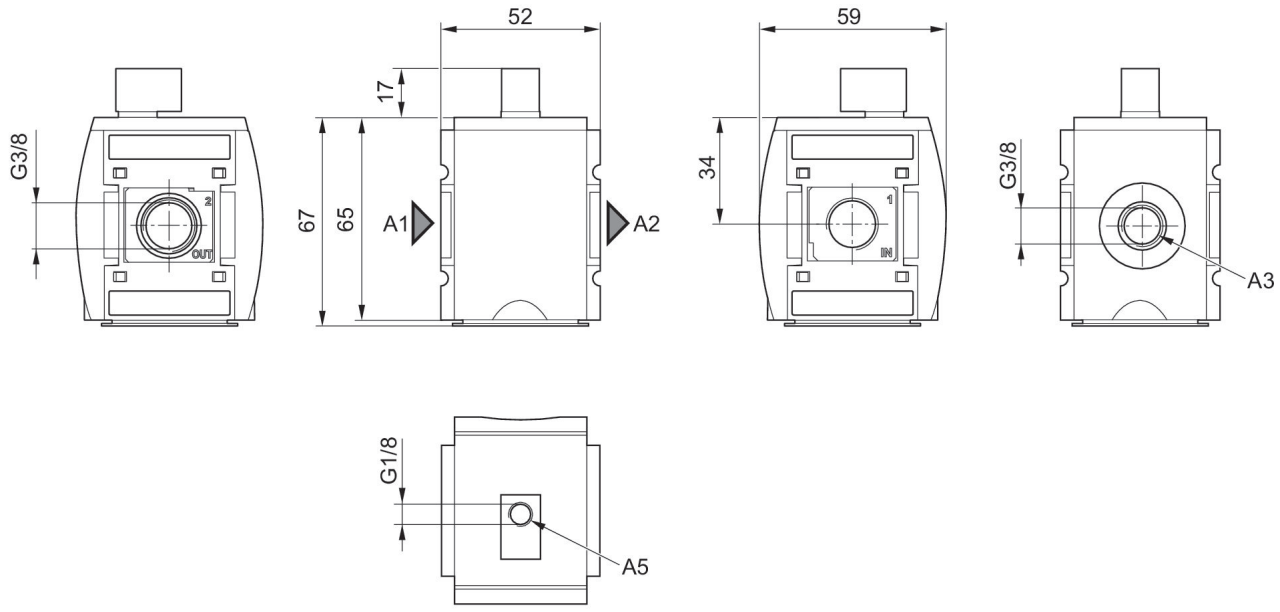

A1 = input A2 = output A3 = ventilation port
A5 = Control pressure connection

Dimensions in mm

Fig. 1

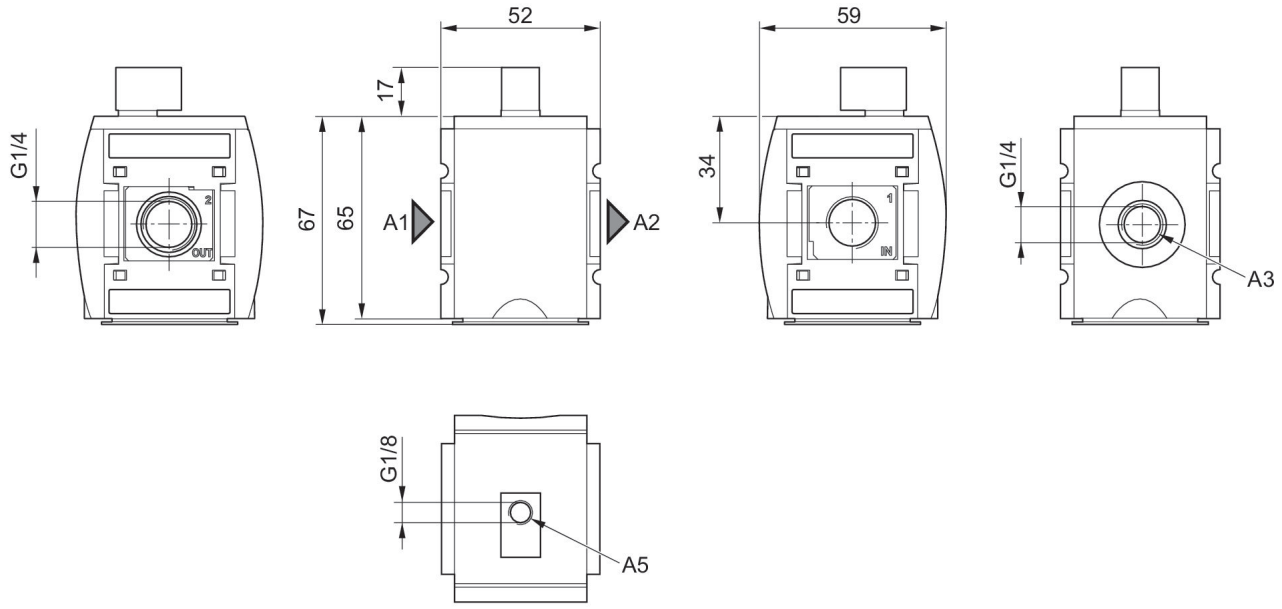

A1 = input A2 = output A3 = ventilation port
A5 = Control pressure connection

control pressure characteristic

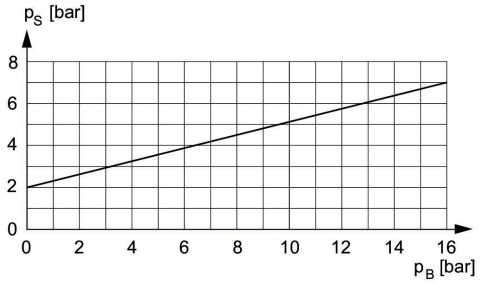

minimum pilot pressure depending on working pressure
PS = control pressure
P_B = Working pressure

Flow rate characteristic, p2 = 0,05 - 7 bar

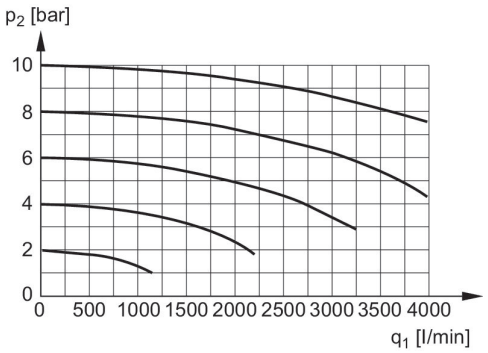

p2 = secondary pressure qn = nominal flow

Rear exhaust

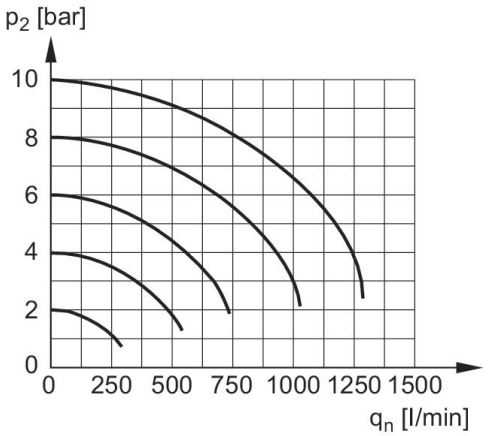

p2 = secondary pressure qn = nominal flow

Accessories overview

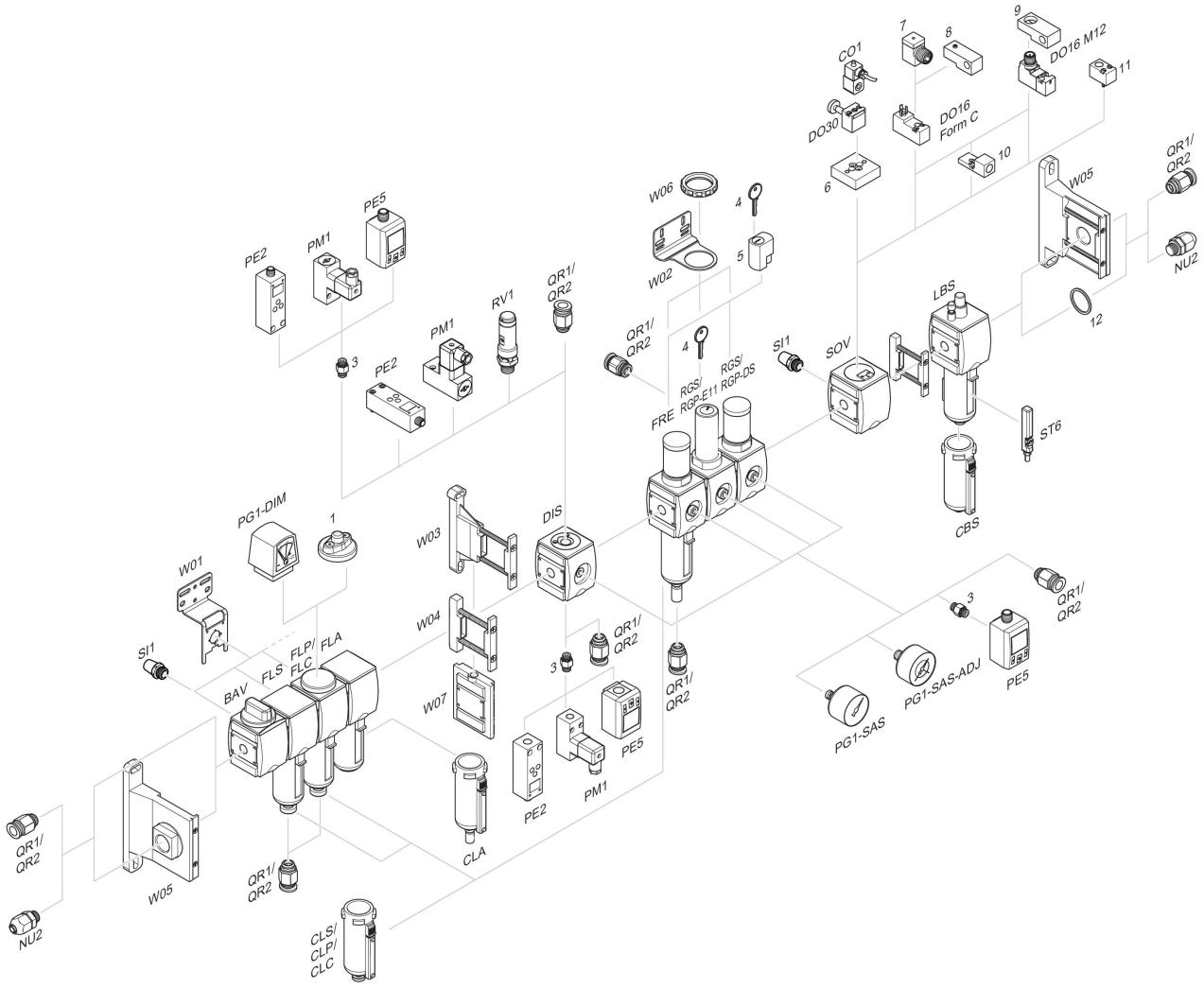

1 = contamination display 3 = Double nipple 4 = Key for E11 locking 5 = mortise lock 6 = Transition plate DO30 7 = Adapter, Series CON-VP 8 = Mounting aid DO16, form C 9 = Mounting aid DO16, M12 10 = Adapter for external pilot air 11 = Adapter pneumatic operation 12 = Sealing ring